PRICE 25 CENTS

MACHINE STOPS
AND
LOCKING DEVICES

BY JOSEPH G. HORNER

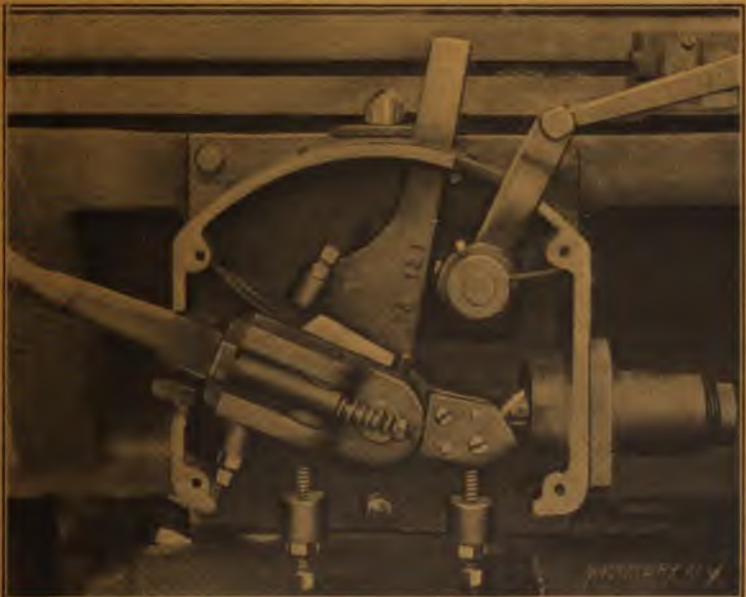

MACHINERY'S REFERENCE BOOK NO. 112
PUBLISHED BY MACHINERY, NEW YORK

MACHINERY'S REFERENCE BOOKS

This treatise is one unit in a comprehensive Series of Reference books originated by MACHINERY, and including an indefinite number of compact units, each covering one subject thoroughly. The whole series comprises a complete working library of mechanical literature. The price of each book is 25 cents (one shilling) delivered anywhere in the world.

LIST OF REFERENCE BOOKS

No. 1. Worm Gearing.—Calculating Dimensions; Hobs; Location of Pitch Circle; Self-Locking Worm Gearing, etc.

No. 2. Drafting-Room Practice.—Systems; Tracing, Lettering and Mounting.

No. 3. Drill Jigs.—Principles of Drill Jigs; Jig Plates; Examples of Jigs.

No. 4. Milling Fixtures.—Principles of Fixtures; Examples of Design.

No. 5. First Principles of Theoretical Mechanics.

No. 6. Punch and Die Work.—Principles of Punch and Die Work; Making and Using Dies; Die and Punch Design.

No. 7. Lathe and Planer Tools.—Cutting Tools; Boring Tools; Shape of Standard Shop Tools; Forming Tools.

No. 8. Working Drawings and Drafting-Room Kinks.

No. 9. Designing and Cutting Cams.—Drafting of Cams; Cam Curves; Cam Design and Cam Cutting.

No. 10. Examples of Machine Shop Practice.—Cutting Bevel Gears; Making a Worm-Gear; Spindle Construction.

No. 11. Bearings.—Design of Bearings; Causes of Hot Bearings; Alloys for Bearings; Friction and Lubrication.

No. 12. Out of print.

No. 13. Blanking Dies.—Making Blanking Dies; Blanking and Piercing Dies; Split Dies; Novel Ideas in Die Making.

No. 14. Details of Machine Tool Design.—Cone Pulleys and Belts; Strength of Countershafts; Tumbler Gear Design; Faults of Iron Castings.

No. 15. Spur Gearing.—Dimensions; Design; Strength; Durability.

No. 16. Machine Tool Drives.—Speeds and Feeds; Single Pulley Drives; Drives for High Speed Cutting Tools.

No. 17. Strength of Cylinders.—Formulas, Charts, and Diagrams.

No. 18. Shop Arithmetic for the Machinist.—Tapers; Change Gears; Cutting Speeds; Feeds; Indexing; Gearing for Cutting Spirals; Angles.

No. 19. Use of Formulas in Mechanics.—With numerous applications.

No. 20. Spiral Gearing.—Rules, Formulas, and Diagrams, etc.

No. 21. Measuring Tools.—History of Standard Measurements; Calipers; Compasses; Micrometer Tools; Protractors.

No. 22. Calculation of Elements of Machine Design.—Factor of Safety; Strength of Bolts; Riveted Joints; Keys and Keyways; Toggle-joints.

No. 23. Theory of Crane Design.—Jib Cranes; Shafts, Gears, and Bearings; Force to Move Crane Trolleys; Pillar Cranes.

No. 24. Examples of Calculating Designs.—Charts in Designing; Punch and Riveter Frames; Shear Frames; Billet and Bar Passes, etc.

No. 25. Deep Hole Drilling.—Methods of Drilling; Construction of Drills.

No. 26. Modern Punch and Die Construction.—Construction and Use of Subpress Dies; Modern Blanking Die Construction; Drawing and Forming Dies.

No. 27. Locomotive Design, Part I.—Boilers, Cylinders, Pipes and Pistons.

No. 28. Locomotive Design, Part II.—Stephenson and Walschaerts Valve Motions; Theory, Calculation and Design.

No. 29. Locomotive Design, Part III.—Smokebox; Exhaust Pipe; Frames; Cross-heads; Guide Bars; Connecting-rods; Crank-pins; Axles; Driving-wheels.

No. 30. Locomotive Design, Part IV.—Springs, Trucks, Cab and Tender.

No. 31. Screw Thread Tools and Gages.

No. 32. Screw Thread Cutting.—Lathe Change Gears; Thread Tools; Kinks.

No. 33. Systems and Practice of the Drafting-Room.

No. 34. Care and Repair of Dynamos and Motors.

No. 35. Tables and Formulas for Shop and Drafting-Room.—The Use of Formulas; Solution of Triangles; Strength of Materials; Gearing; Screw Threads; Tap Drills; Drill Sizes; Tapers; Keys, etc.

No. 36. Iron and Steel.—Principles of Manufacture and Treatment.

No. 37. Bevel Gearing.—Rules and Formulas; Examples of Calculation; Tooth Outlines; Strength and Durability; Design; Methods of Cutting Teeth.

No. 38. Out of print. See No. 98.

No. 39. Fans, Ventilation and Heating.—Fans; Heaters; Shop Heating.

No. 40. Fly-Wheels.—Their Purpose, Calculation and Design.

No. 41. Jigs and Fixtures, Part I.—Principles of Design; Drill Jig Bushings; Locating Points; Clamping Devices.

No. 42. Jigs and Fixtures, Part II.—Open and Closed Drill Jigs.

No. 43. Jigs and Fixtures, Part III.—Boring and Milling Fixtures.

No. 44. Machine Blacksmithing.—Systems, Tools and Machines used.

(See inside back cover for additional titles)

MACHINERY'S REFERENCE SERIES

EACH NUMBER IS ONE UNIT IN A COMPLETE LIBRARY OF
MACHINE DESIGN AND SHOP PRACTICE REVISED AND
REPUBLISHED FROM MACHINERY

NUMBER 112

MACHINE STOPS, TRIPS
AND
LOCKING DEVICES

BY JOSEPH G. HORNER

CONTENTS

Machine Stops, Trips and Reversing Mechanisms - - 3
Clamping and Locking Devices Applied to Machine Tools - - - - - - - - - 25

49-55 Lafayette Street, New York City

CHAPTER I

MACHINE STOPS, TRIPS AND REVERSING MECHANISMS

In recent years, stops, trips and reversing mechanisms have been applied to a vast number of machine tools. The stops employed vary from the simple adjustable stop, tappet or dog, to the mechanisms in which these are combined with cushion devices, means for reversing feed movements, etc.

It may be advisable at the outset to call attention to the difference between a "self-acting" and an "automatic" movement. Many machines which are not wholly automatic contain self-acting movements. A slide-rest is self-acting, though the lathe is not automatic, because the movements of the slides have to be thrown in and out by the operator. The greater number of turret lathes are semi-automatic or self-acting, as distinct from the automatic or "full automatic" screw machine. A number of gear-cutters and grinders, in which all the movements proceed without intervention from the attendant, are also in the class with the fully automatic machines. It is in these classes of machines that the highest developments of the mechanisms to be considered are found.

There are two kinds of stops: "Dead" stops are those which positively arrest a movement, and gage a length or diameter in repetitive work; "trip" stops or "trips" throw out a movement, reverse it, or throw it in again. Dead stops alone are not sufficient to check a power feed or self-acting movement; some means must also be provided to throw out the feed. Then a dead stop may or may not be incorporated to form a positive check. In many cases the tools themselves, as in some turret-lathe work, constitute dead stops, and render the provision of additional stops unnecessary. A dead stop is used in hand-operated mechanisms to prevent the operator from moving the slide or other portion further than the predetermined limit, thus guarding against error, and insuring a duplication of dimensions without the need for measurement or gaging. Again, it is often possible to throw out a dead stop temporarily, and go past it for certain purposes, such as inspection, and again throw it in at the same setting as before. A number of dead stops may be located close together, to enable selection to be made at will or in regular rotation, as in the case of a turret—one for each tool-hole. Frequently duplex stops are arranged, to enable the choice of two distances for a single slide, one stop being thrown out of the way. Fine adjustment is in some cases provided for a dead stop, so that a very precise setting can be obtained.

An important point in the design of dead stops is that of rigidity; a solid abutment should always be used, and any excessive overhang tending to cause springing must be avoided; otherwise
are impossible. In the operation of a hand turret

chine tool there is necessarily a great deal of banging and rough treatment, especially in the hands of a careless operator, and weak and badly-supported stops will cause unsatisfactory work. The binding arrangement for a stop must also be efficient, so that it will not slip and cause a batch of work to be turned out to wrong dimensions. The hardening of contact surfaces is also advisable for preventing wear and bruising that would affect the dimensions of work produced.

The position and method of attachment of a dead stop depends on the class of machine and the design. Where a sliding table has to be stopped, it is in many cases possible to attach the stops or dogs by means of a bolt and T-slot in the edge of the table, this being a very simple method and permitting easy adjustment; or a round rod may be held in bearings on the edge of the table, and adjustable dogs be clamped to the rod by set-screws, or by split ears or lugs. Another method is to have a fixed stop bolted to the table edge, and adjustable dogs attached to a rod in front, these being struck by the stop according to the momevents of the table. A favorite device for short slides, such as the cross-slides of turret lathes, is to attach the stops to a rod or screw passing through a hole in the slide, the faces of the latter coming into contact on each side alternately with the stops. Plain cylindrical parts, if of small diameter, are often controlled by a collar or lug, clamped to them by means of a set-screw, and arranged to encounter the face of the bearing through which the part moves.

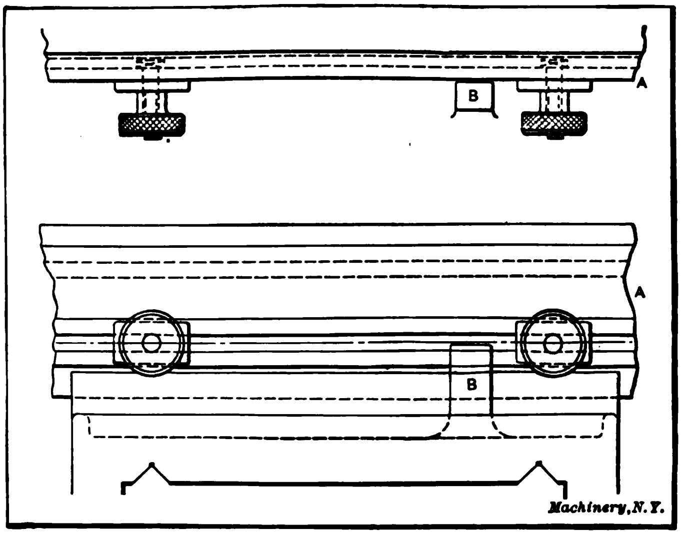

Fig. 1. Dead Stops of a Type used on a Cutter-grinding Machine

It is evidently impossible to show all the different kinds of stops which are in use on various machine tools, but the following selection of typical examples embodies the principles involved in the design of all stops. Slight modifications are made in different machines.

In Fig. 1 is shown the simplest possible kind of dead stop applied to the table of a cutter grinding machine. We have here a T-slot in the edge of the moving table *A*, receiving the heads of the bolts which clamp the two stop-plates through the medium of knurled nuts. The plates strike the block *B* on the transverse table.

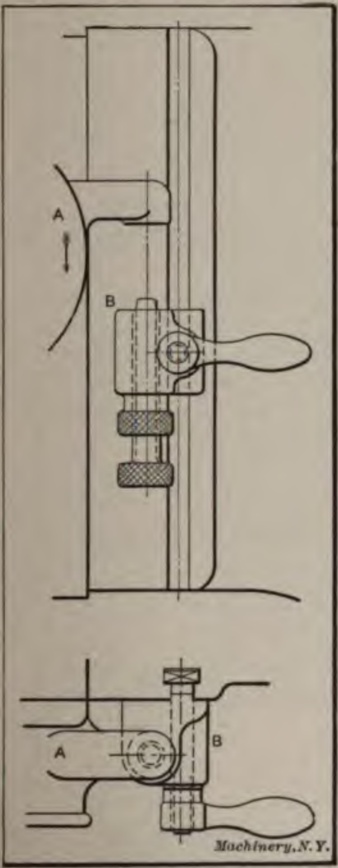

Fig. 2. Dead Stop used on a Vertical Milling Machine

Fig. 2 shows a modification of the same principle. In this case the sliding head *A* of a vertical milling machine is to be stopped in one direction only—the downward—and a projection stands out from the slide *A* to encounter the end of the stop-screw in the block *B*, which is clamped in a T-slot on the fixed head. After adjusting *B* approximately in position up or down in the slot, by the lever, the final adjustment is made by the knurled-head screw, which is finally locked by its nut. The screw does not, however, provide a precise means of setting to any exact measurement. In some cases, therefore, such a stop-screw has a micrometer adjustment, Fig. 3. The head of the screw is graduated, so that the screw can be adjusted by a known amount—a manifest advantage in fine work. The body of the stop is split, thus providing positive means for binding the stop-screw.

An illustration of the stop-screw or rod passing through a hole in the moving slide is shown in Fig. 4. The example shown is that of a cross-slide of a turret lathe. The stop-screw in this case also serves the purpose of moving the rest along through the medium of the hand-wheel and the miter gears; frequently, however, a separate plain rod is used, parallel with the screw, and carrying split clamped dogs instead of the double lock-nuts, shown in Fig. 4. Another example of the use of double nuts is shown in Fig. 7, illustrating the rear end of a cross-slide for a turret lathe. The stop-screw is tapped into the fixed slide, and passes through an extension on the moving slide. T [illegible] serves as a stop for both front and back tools. Ir [illegible] g. 18, two screws are used locked with nuts, the e [illegible] g struck by a pin screwed into the moving slide. The advantage of both these designs of stops is that they are perfectly central, and are therefore better than those classes of stops which are set at the side of the moving slide.

The combination of two stops, to provide the choice of two lengths, is common. A case of this kind is shown in Fig. 5, showing the rear end of a turret slide. The main screw *A*, with a locking nut, abuts against the back of the saddle or base, and forms one dead stop. An adjustable block *B*, bolted to the edge of the slide, carries a pivoted dog *C*, which when dropped down into the position indicated in the view to the left, strikes against a facing on the back of the base. A flat spring *D*, screwed to *B*, presses against the tail of *C* and maintains it in position. If *C* is not required, it is swung up into the horizontal position, where the flat spring also retains it.

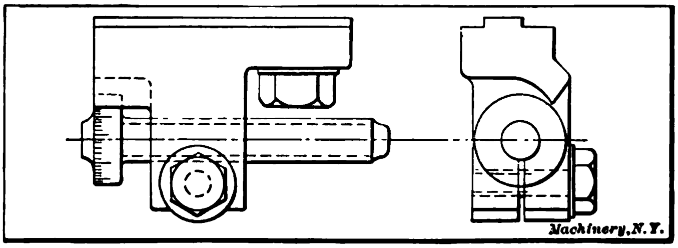

Fig. 3. Stop-screw with Micrometer Adjustment

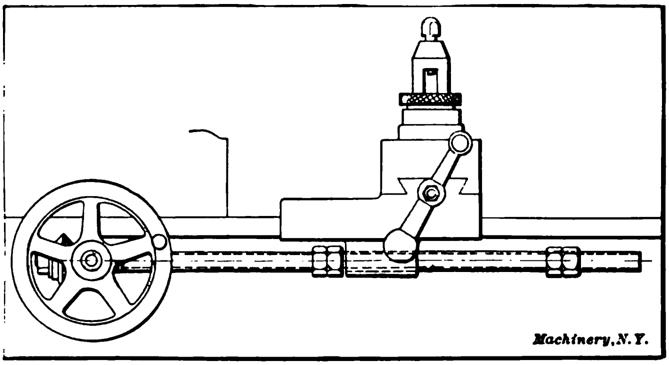

Fig. 4. Stop-rod passing through a Hole in a Turret Lathe Cross-slide

A simple kind of stop for round spindles is shown in Fig. 6. The example shown is used on a sensitive drill press, and consists only of a split collar, which arrests the downward travel of the spindle by striking against the top bearing.

One of the most valuable principles in stop construction is that of the rotary disk carrying several stops, any one of which may be brought into action, either in a selective manner—that is, according to t wish of the operator—or in automatic fashion—one or more stops be made to act only for a particular tool or set of tools. In this way c pactness is secured, and the stops are in full sight and easily accessi

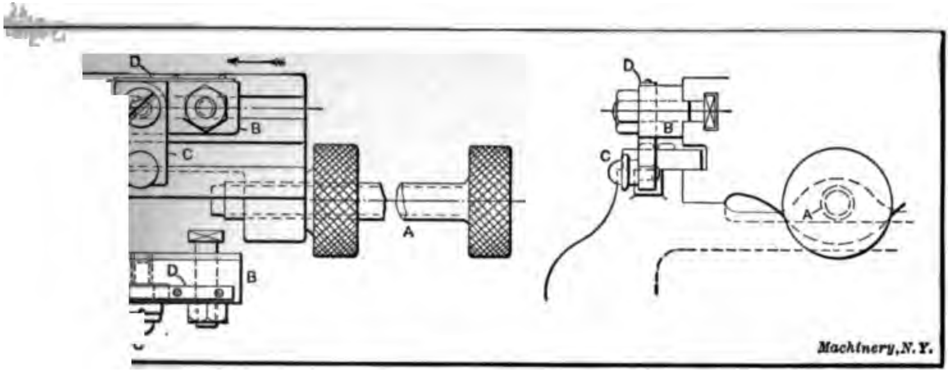

Fig. 5. Double Stops used on Turret Lathe, making it possible to obtain Two Lengths without the Necessity of readjusting the Stop-screw

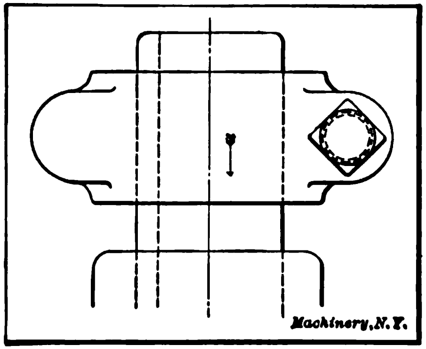

Fig. 6. Split Stop Collar used on Drill-press Spindle

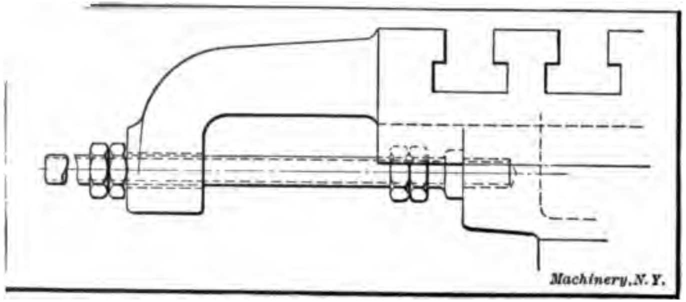

Fig. 7. Efficient Type of Stop-rod for Turret Lathe Cross-slide

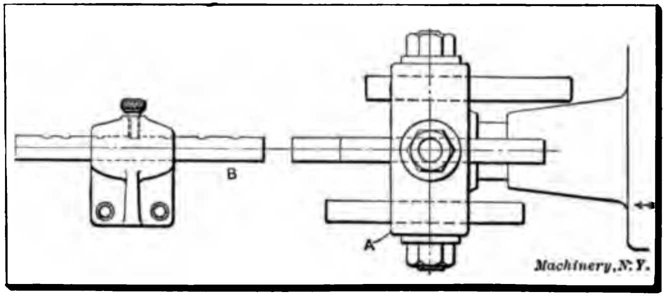

Fig. 8. Rotating Dead Stops used on a Turret Lathe Cross-slide

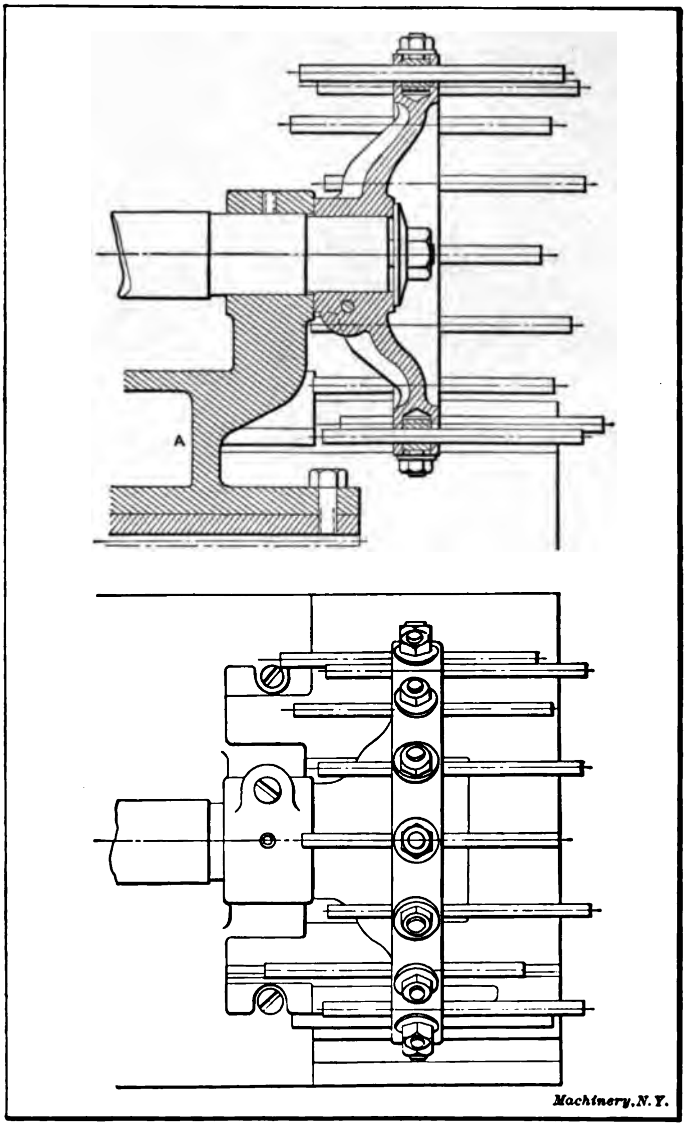

Fig. 9. Dead Stops used on a Turret Lathe of German Make

which was not the case with some of the older designs of multiple stops, such as, for example, a set of flat bars laid side by side and used for turret stops. Fig. 8 illustrates a rotating type of stop, adopted for the cross-slide saddle of the turret lathe, there being one stop-rod for each tool on the cross-slide turret. The head *A* is mounted on the end of a shaft that is rotated simultaneously with the turret, and each of the stop-rods is adjusted independently and secured with a nut, the rod passing through the body of the bolt. Each rod in turn abuts against the bar *B*, held in a bracket bolted to the front of the lathe bed. The adjustment of this bar is effected by loosening the set-screw and sliding it through the bracket; on tightening the set-screw, it bears down on a flat milled on the bar, and forms a positive check to slipping.

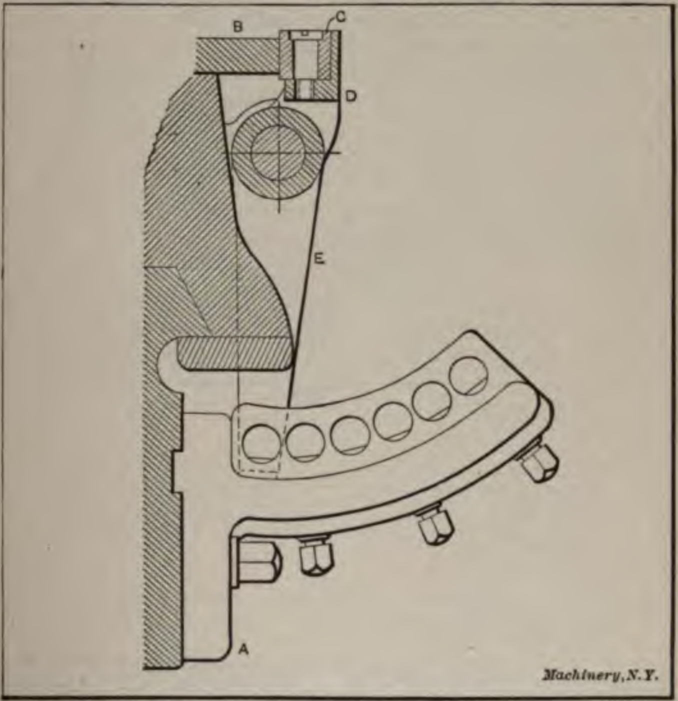

Fig. 10. Turret Lathe Stops used on the Pratt & Whitney Turret Lathes

Another application is shown in Fig. 9. This arrangement is applied to the rear end of the Pittler turrets, which are mounted on a horizontal axis. There are sixteen holes in the turret for tools, and a stop is provided for each hole. All the rods are held in the rim of a disk secured to the rear end of the spindle, on the other end of which the tool disk or turret is secured. The turret slide *A* travels, bringing one stop-rod at a time against the fixed bed.

An arrangement of multiple [illegible] "selected" by a radial action,

though not set in a circle, is used in the Pratt & Whitney turret lathes. Each stop-rod is held in an adjustable bracket *A*, Fig. 10, bolted to the front side of the bed, set-screws being used for clamping; three of these only are visible in the view. As the turret rotates, a cam *B*, cut on its base, operates a roller *C* mounted on a pivoted lever *D*, and thus brings the flat end of another lever *E*, which is secured to the shaft of *D*, into line with one or another of the stop-rods, corresponding to the position of the tool-holes in the turret. The lever *E* is backed up by a lug projecting from the turret slide (not shown), taking the thrust, and eliminating spring.

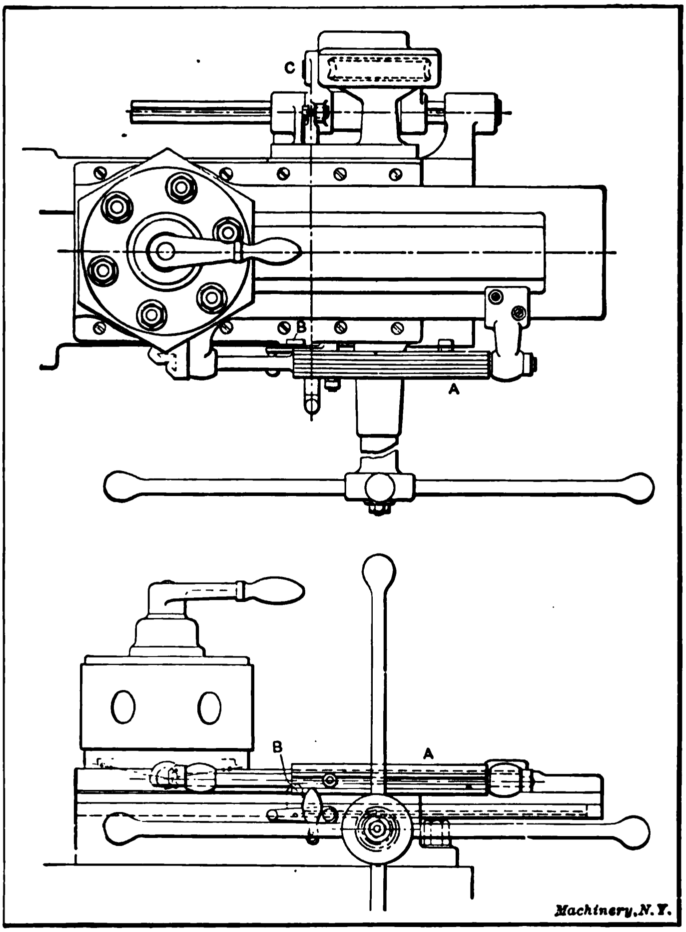

Fig. 11. Rotating Stop-bar used on Turret Lathe

A type of rotating stop which has been extensively adopted by turret lathe manufacturers during recent years is illustrated in Fig. 11. The principle is that of fitting a rotating slotted bar *A* somewhere in front of the turret slide, and gearing it up to the turret to turn in unison with the latter, so that a new face of the bar will be presented for each turret face presented to the work. T-slots in the bar provide for the attachment of stop-blocks or nuts, any number of which may be used on one face. As the turret slide travels along, these nuts come against either a trip lever or a dead stop which lies in their path, and so throw out the feed, and generally also act as dead stops. In the illustration, the nuts which happen to be on the face nearest the turret are touched by the bar *B*, and, by forcing this down, operate a rod that passes through the base, thus dropping the worm-box *C* and stopping the feed.

On the Alfred Herbert hexagon turret lathes a refinement of this type of stop is introduced for the purpose of obtaining the very finest limits in regard to length, by enabling uniform pressure to be put on the stops, independent of changes in the pressure on the cutting tools as they become dull. Fig. 13 shows the appearance of the saddle with the hexagon stop-rod in front, and the pilot handle or spider. In front of the latter is a disk *A*, rotating with the shaft, and carrying three adjustable dogs (see the detailed view, Fig. 12) with index lines upon them. The saddle has a fixed sector with three lines corresponding with those on the dogs. After the feed has been tripped by the contact of one of the stops on the bar with the end of the vertical plunger seen in Fig. 13, the saddle can be moved a short distance by hand up to a dead stop. When the saddle is hard up against this stop, one of the dogs on the disk is set to come opposite one of the three index lines on the sector. The dog thus forms an accurate means of measuring the pressure on the dead stop. If more than one length is required the two other dogs may be brought into use.

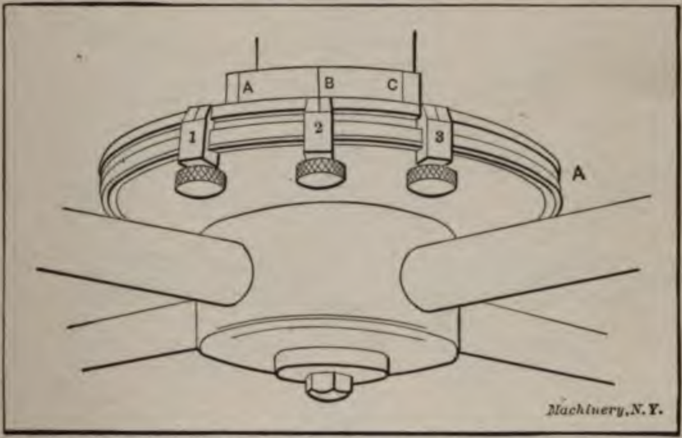

Machinery,N.Y.

Fig. 12. Enlarged Detail of the Indicator of the Device shown in Fig. 13

The combined trip and dead stop is found in other [illegible] nes besides turret lathes. Fig. 14 represents the front [illegible] table, with a trip dog *A* which presses down the plunger *B*, and through a pair of levers throws out the feed. The stops *C* are set to abut against the block which receives *B*, and thus act as dead stops, positively arresting the table, so that exact lengths can be milled. If the milling cutter simply has to clear over the ends of the work, the dead stops need not be set, but if the travel has to be stopped at definite positions, they are brought into employment.

When a feed has to be tripped, the actual medium by which it is thrown out depends on circumstances; it may be either through shifting belts, by sliding clutches—toothed or friction—or through a drop-worm. The difficulty with toothed clutches is that of insuring the re-engagement of the teeth. They are reliable enough, when hand-operated, but may fail when an attempt is made to render the mechanism self-acting, unless the clutches are actuated by springs or a lever. To render the action absolutely precise, an element must be included to cause both the release and the engagement to take place at an instant. A spring plunger is the device often adopted. A spring is compressed by the movement of the striking lever, which at the same time releases a trigger or catch, setting the spring free to push the clutch into engagement. This method is obviously capable of various applications. The springs may be actuated by a lever or by cams or by other means. A latch or latches lock the mechanism, rendering it impossible to throw any other movement in until they are released. This feature is worked out in various ways and is embodied in several gear-cutting machines to prevent interference between the indexing and cutting operations.

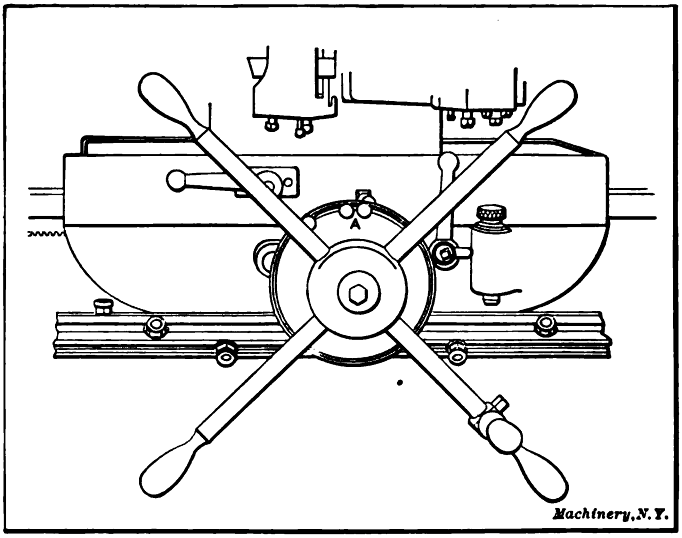

Fig. 13. Rotating Stop-bar and Accurate Indicator used on the Alfred Herbert Hexagon Turret Lathe

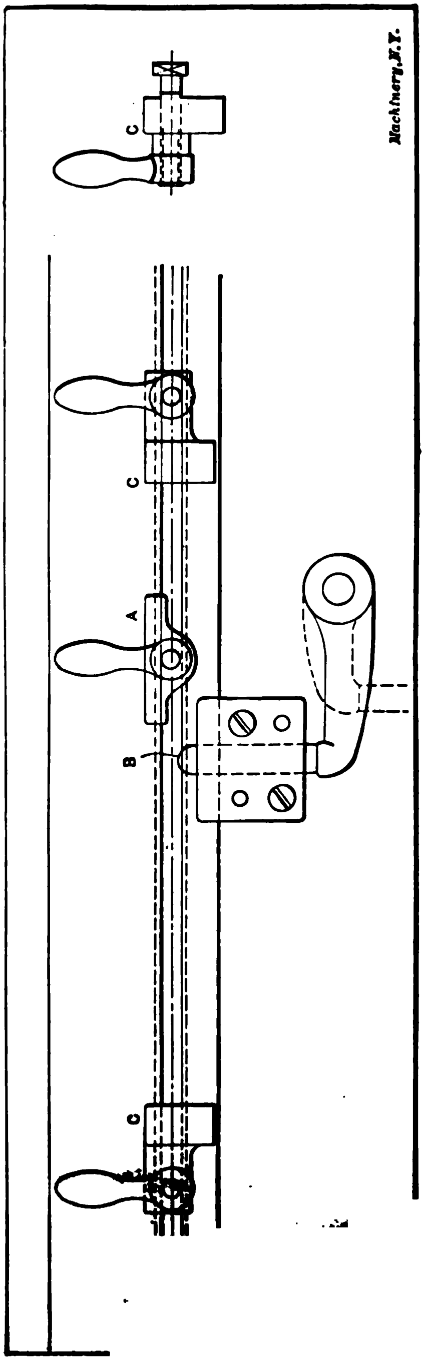

Fig. 14. Combined Trip and Dead Stops for Milling Machine Table

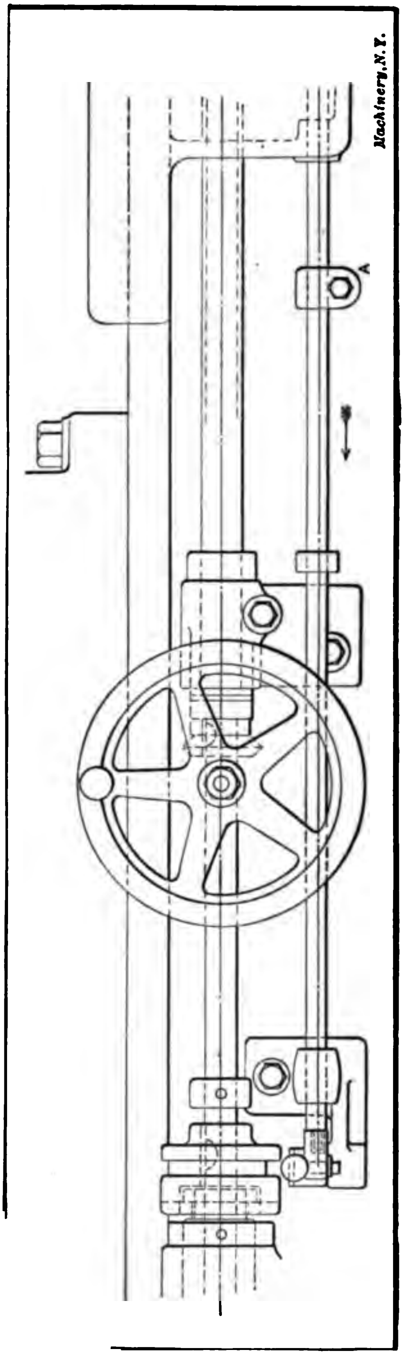

Fig. 15. Trip for Turret Lathe Cross-slide

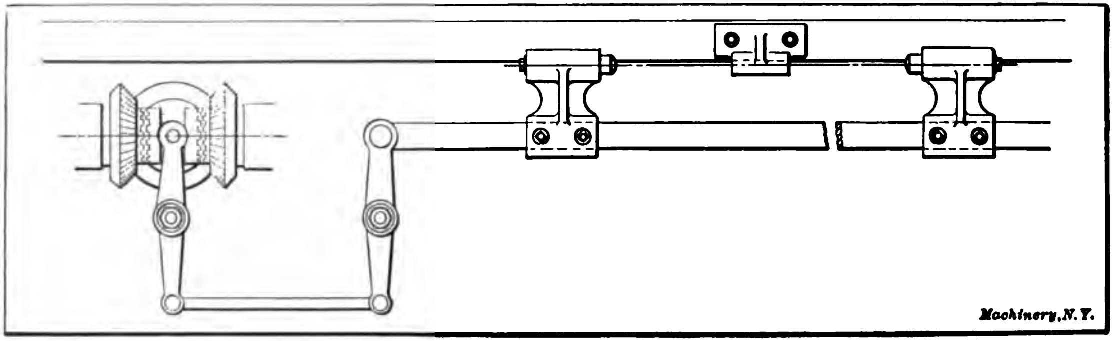

Fig. 16. Double Trip and Reversing Clutch for Grinding Machine

Fig. 17. Example of Single Trip without Reversal

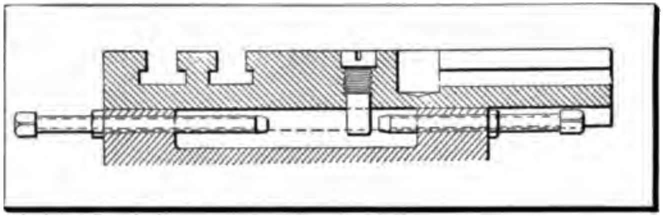

Fig. 18. Double Dead Stops

Two types of simple trips, operating clutches which must be reengaged by hand, are shown in Figs. 15 and 17. The first is for a turret lathe cross-slide, the second for a gear-cutting machine. In Fig. 15 the saddle strikes the clamp-collar *A* on the stop-rod, moving the latter to the left, and actuating the lever which throws out the toothed clutch, stopping the feed to the saddle. In Fig. 17 the function is similar, in that the downward movement of the slide *A* is stopped; a bracket bolted to this embraces the rod *B* on the fixed part of the machine, and strikes the lever *C* which actuates lever *D* through a link, thus throwing out the clutch, and stopping the feed.

A double trip and reversing mechanism for a large grinding machine is shown in Fig. 16. In this arrangement the dog is bolted to the edge of the moving table, and strikes against adjustable dogs on the flat striking bar, which is connected by levers to the toothed clutch. In this design the table feeds and reverses so long as the driving mechanism is running. This brings us to the question of locking, that is retaining a clutch or other gear in mesh as long as it has to drive. Without some means of locking, there is nothing to prevent the clutch from disengaging under the effects of vibration. The simplest and most common method is to fit a spring plunger with a pointed end, or with a roller, which slips down along a beveled end on one of the levers, or into recesses, there being many ways of accomplishing the desired result. Fig. 19 shows the principle applied to a toothed clutch set between miter gears, for reversing a grinding machine. When the stop-rod *A* is shifted endwise it moves the lever *B* over, and the left-hand end of [illegible] clutch into mesh. Simultaneously the plunger *C* [illegible] the action of the coiled spring, and its bevel [illegible] beveled end of the short extension on *B*, thus [illegible]ely into full engagement,

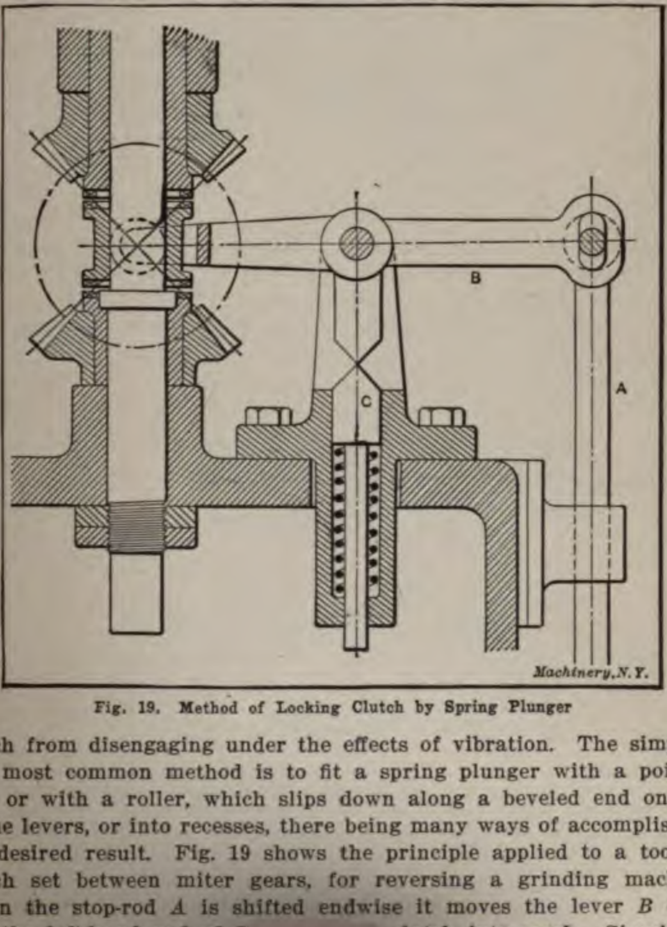

Fig. 19. Method of Locking Clutch by Spring Plunger

and holding it there until reversal again occurs. Another example of the spring plunger arrangement is illustrated in Fig. 20. This design is taken from the clutch-reversing mechanism of a special gear-cutter. The locking is effected by a roller *A* mounted in a stud or plunger, and forced outward by a spiral spring contained in the holder. As the lever *B* is thrown over by the long lever pivoted to it, the roller is moved from the flat face *a* to the face *b*, thus retaining lever *B* in position.

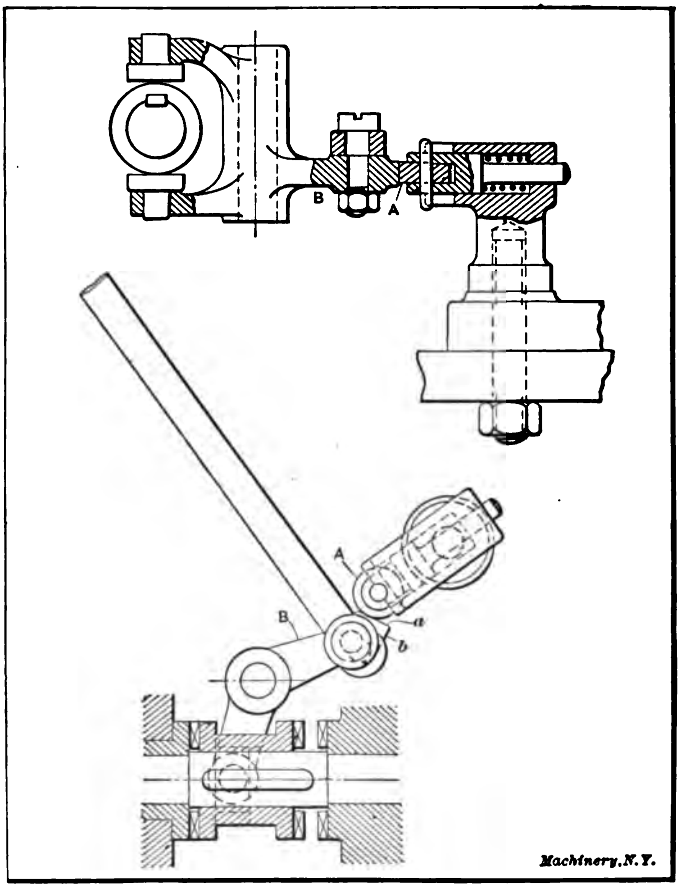

Fig. 20. Spring Plunger applied to Clutch-reversing Mechanism

Another method, see Fig. 21, utilizes the bent end of a flat spring *A* to lock the beveled end of a lever in its two positions. This example is taken from a shaping machine, in which the dogs *B*, bolted to the T-slot in the top of the ram, encounter the trip lever *C* and throw it over, thus actuating the two connecting levers which move the lever *D*, the latter sliding the rod which throws in the friction clutch inside the belt pulleys. *E* is a wedge, adjusted in either direction by the screw and knurled nut, by which fine adjustments in length of stroke are obtained while the machine is running.

In cases where a clutch is thrown over by the part rotation of a spindle, the latter may be utilized in connection with the locking as in Fig. 22, which shows a mechanism for a milling machine table. A plunger is situated at *A*, which catches in the stud inserted in the spindle below, and retains the latter in position. The part rotation of the spindle is effected through a plunger rack *B*, meshing with the teeth cut on the spindle, and forced [illegible] v the bevel-edged dog *C* on the edge of the table. *D* i [illegible] thrown into gear by the movement of the spind [illegible] able feed-screw into action.

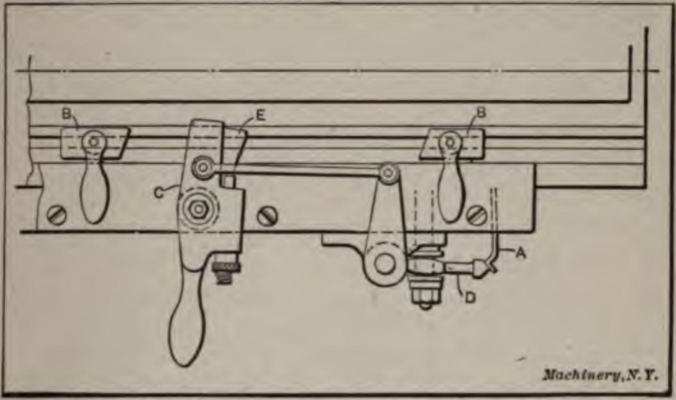

Fig. 21. Spring Locking Arrangement for the Shaper-reversing Mechanism

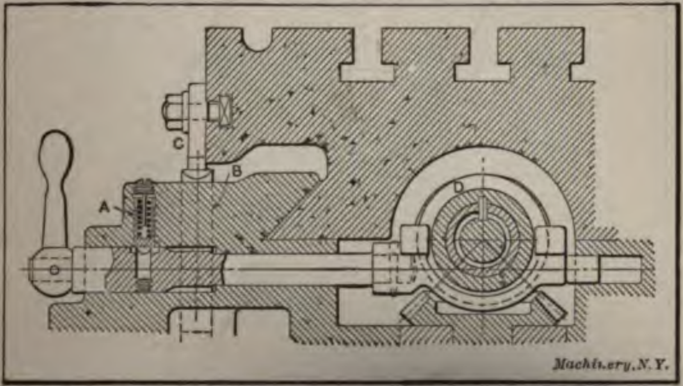

Fig. 22. Locking Mechanism for Clutch for Milling Machine Feed-screw

Worm trips are very much in f [illegible] implicity and their instantaneous effect. Th [illegible] is simply released and falls by the action [illegible] ng the

teeth from those of the wheel. Two examples of this mode of action will suffice. Fig. 23 is a trip applied to an upright drill, in which the end of a lever *A* is struck by the downcoming collar or rod on the spindle sleeve, raising the other end of the lever, which is formed as a trigger, and releasing the handle *B*, which is clamped to the worm-box, pivoted at point *a*. The worm-box and handle turn on the axis passing through *a*, and thus the worm is allowed to fall away from its

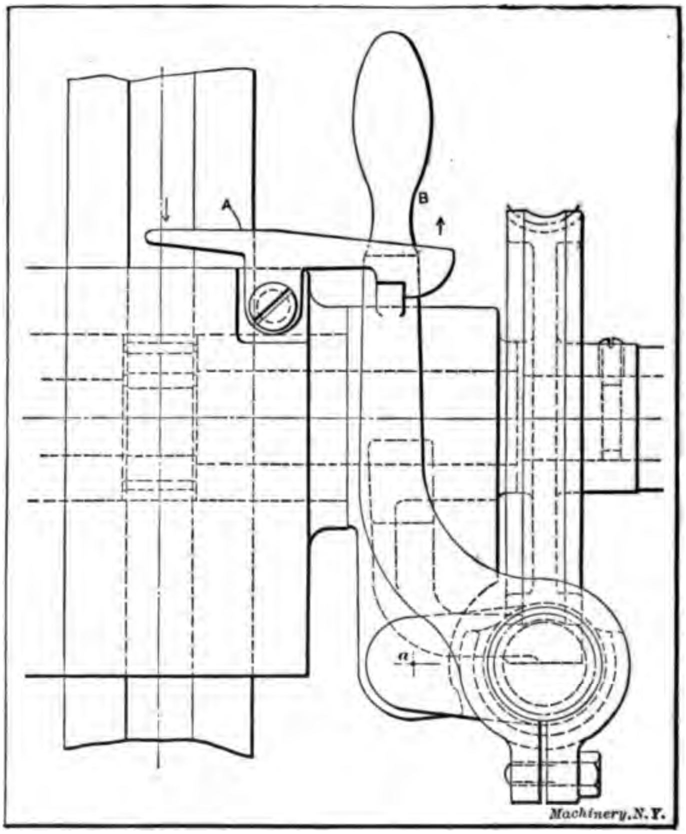

Fig. 23. Trigger Trip for Drop Worm-box

gear. The striking of the lever *A* is generally accomplished by an adjustable collar, clamped at any desired position on the spindle sleeve, or by a rod, as in Fig. 24, held in a stud projecting out from the sleeve.

Fig. 25 is a drop latch fitted to the table of a vertical milling machine, which drops the worm from engagement with the gear th turns the table screw. So long as the latch *A* remains in the positi shown, maintained by the spring plunger *B*, the shoulder cut retains the end of the worm-shaft bearing in place, but when on the under side of the table comes against the short end of *A*, the latter is tilted, and the worm drops.

With regard to belt-shifting mechanisms, the difficulty of producing the necessary amount of belt travel with a small amount of stop lever movement is overcome by magnifying the effect by a series of long belt levers. The operating tappet mechanism is comparatively simple, comprising in general a striking dog *A*, Fig. 26, which knocks over the lever *B*, connected by other levers with the belt-shifting mechanism. The return of the lever *B* is produced by the other dog or tappet *C*, the catch of which can be tipped up, out of the way.

The fitting of trip motions to disks is adopted in various ways, a stop-block being usually bolted to the disk so that at a predetermined point, the block actuates the trip gear and throws out a certain movement. Thus in Fig. 31, the worm-wheel has dogs bolted to a T-slot in its face, and these dogs strike a swinging lever *A*, thus imparting a partial rotation to the shaft on which it is keyed, and dropping, through a rack and pinion, a slide which carries a sector gear that has to be disengaged. The spring plunger and roller *B* keep the lever *A* in either of its two positions, the roller pressing on one or the other of the two slopes of the beveled end. Another interesting application of the disk trip is illustrated in Fig. 29, which shows the end of a boring mill cross-rail. When the clutch *C* is in gear, the feed-screw *A* is turned by a gear *B*, operated from other spur gears not shown. A worm-wheel *D*, with a T-slot in its face for carrying a dog *E*, is driven by a worm on the extension of the screw *A*. herefore, the clutch is in mesh, the wheel *D* continues to rotate contact with the beveled end of the trip lever *F*, and

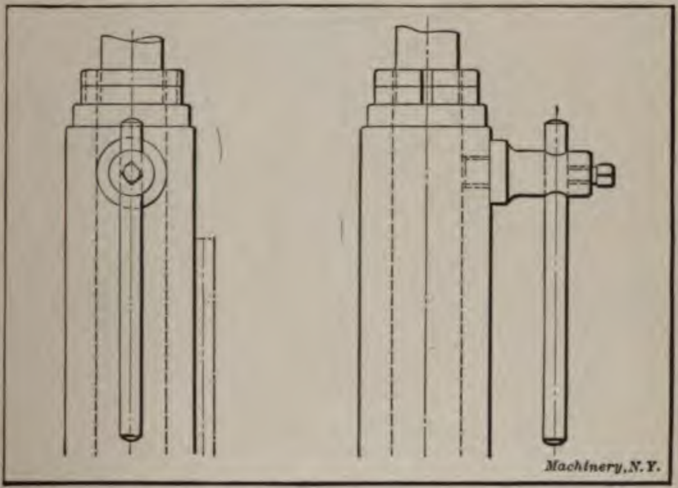

Fig. 24. Trip Rod Fitted to Drill Press Sleeve

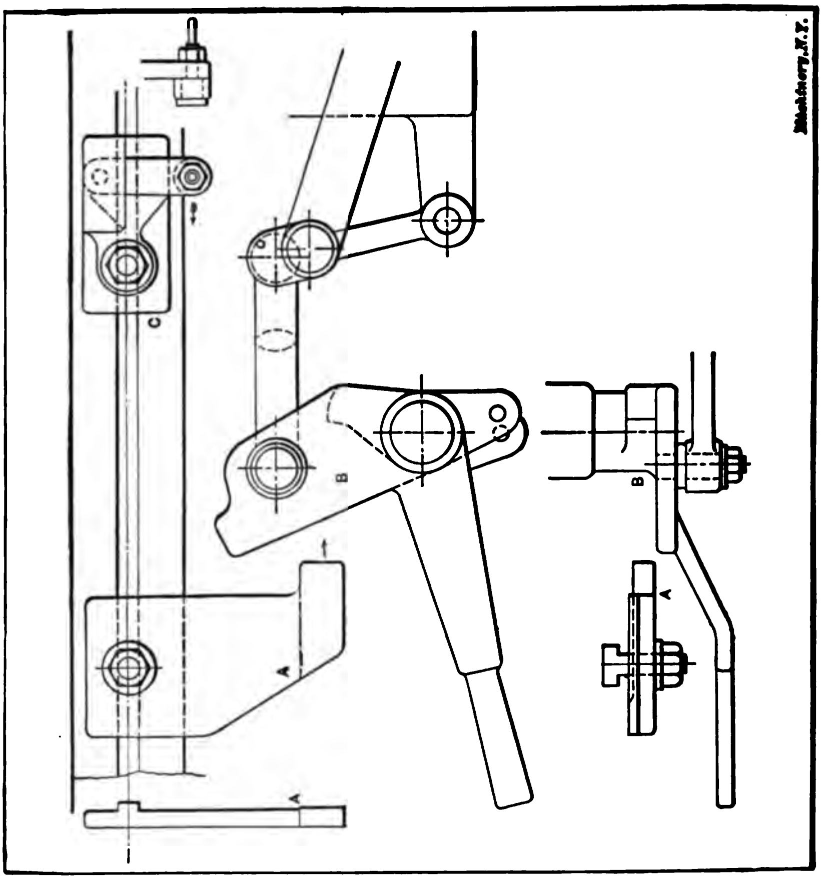

Fig. 26. Belt-shifting Mechanism for Planer

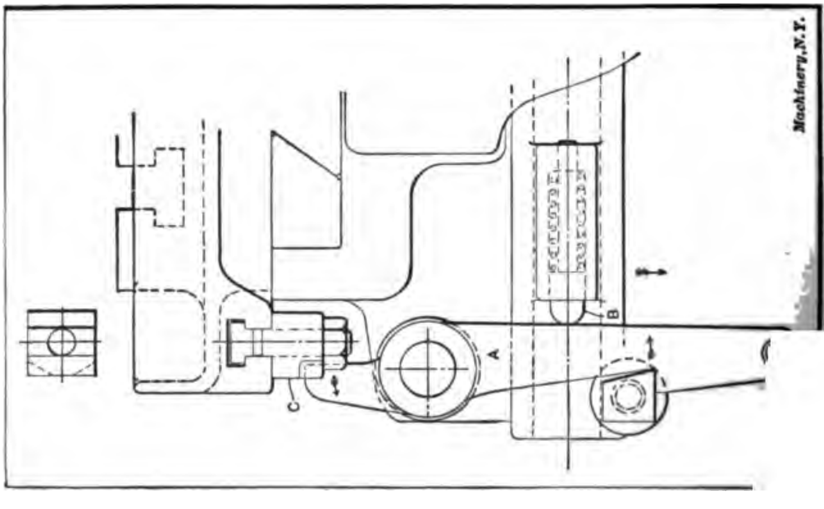

or Drop Worm for Milling Machine

the latter is pushed over, disengaging the clutch, and stopping the rotation of *A*. Dog *E* is set at any required position on the circle to trip the feed at the desired position of the cross-slide on the rail. Another variation of the same idea is shown in Fig. 28, illustrating a feeding device for a gear-cutter. A slotted lever *A* is rocked to and fro, and by means of the pawls *a* gives intermittent turning movements to the ratchet wheel *B*. This continues until the dog *b* comes in the way of the pawls, which are then thrust out of engagement with *B*, thus stopping the feed.

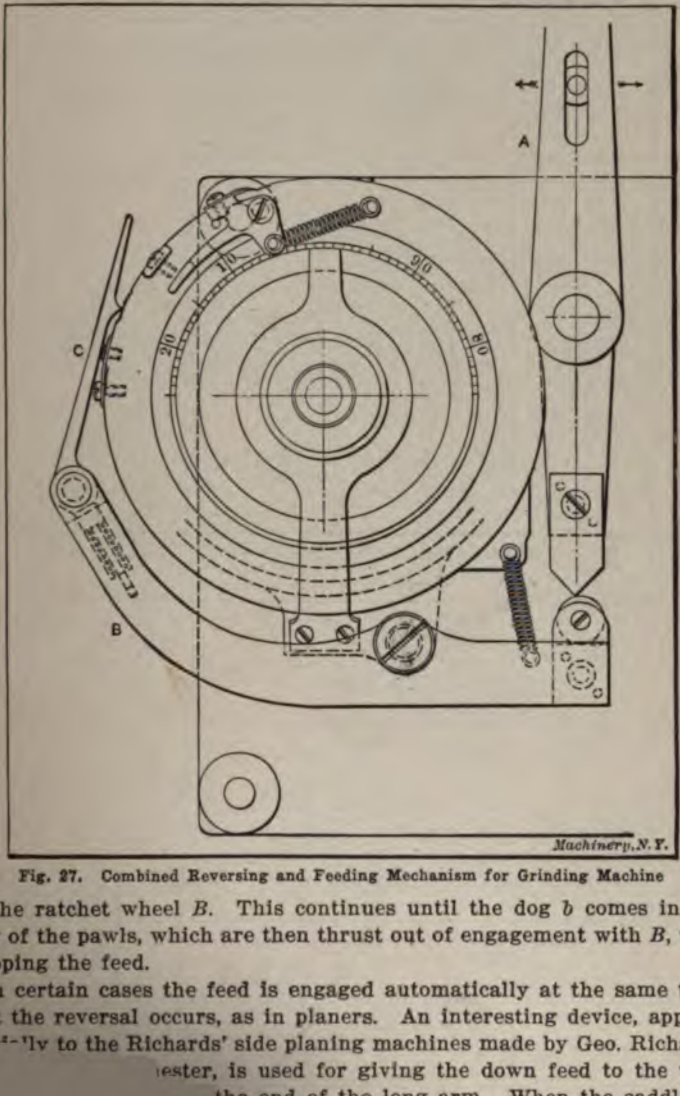

Fig. 27. Combined Reversing and Feeding Mechanism for Grinding Machine

In certain cases the feed is engaged automatically at the same time that the reversal occurs, as in planers. An interesting device, applied
ly to the Richards' side planing machines made by Geo. Richards
ester, is used for giving the down feed to the tool-
the end of the long arm. When the saddle *A*,
d *B*, propelled by its screw turned by belt

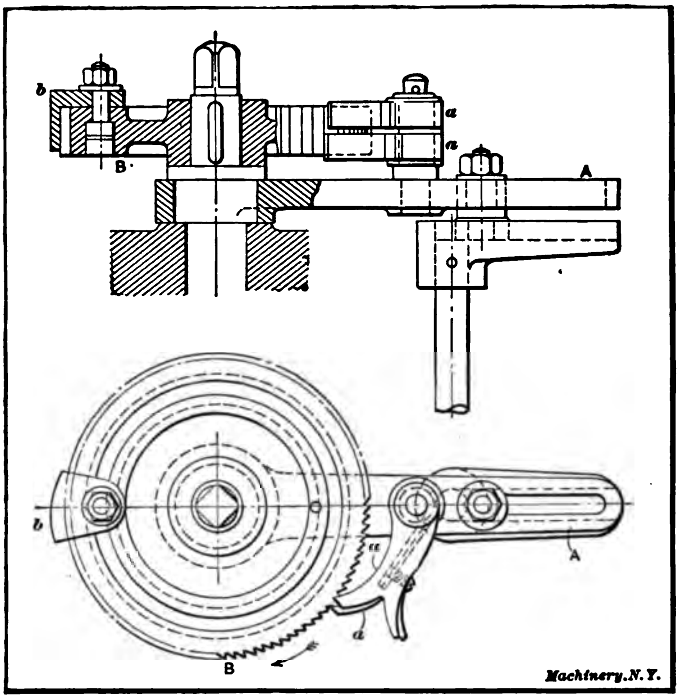

Fig. 28. Ratchet Feed Trip for Gear-cutter

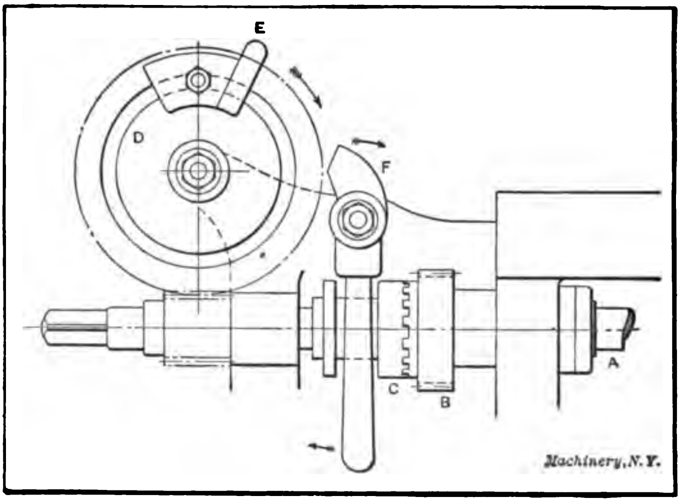

Fig. 29. Trip of the Disk Type used on a Boring Mill

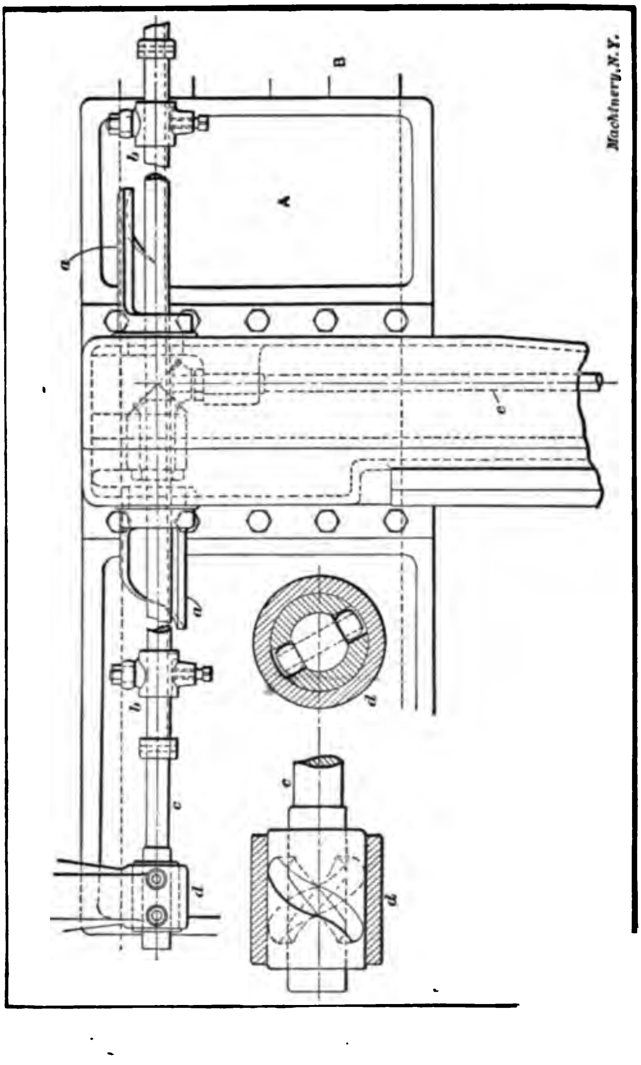

Fig. 30. Combined Reversing and Feeding Mechanism for Side Planer

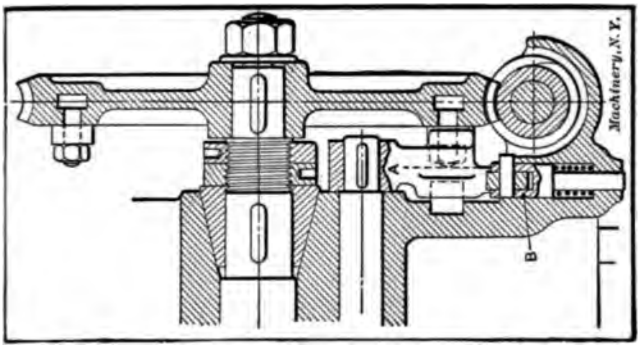

Fig. 31. Trip Actuated from Worm-wheel

pulleys with open and crossed belts, a pair of horns *a*, bolted to *A*, strike dogs *b*, mounted on a rod *c*, which by its longitudinal movement actuates the belt-shifting mechanism and produces the reversals, as in an ordinary planer. But the rod *c* is also given a twisting movement, in the following manner: Within the bearing *d* is a bushing, having cam grooves cut in its walls as shown in the enlarged detail, these grooves receiving rollers on the ends of a pin that passes through the rod *c*. When therefore *c* is slid endwise it must twist the rod, because the bushing cannot turn. Another rod *e*, through the medium of miter gears, imparts the down feed to the screw of the tool-box through a ratchet gear.

The combined reversal and feed is also applied to grinding machines, to feed the wheel a slight amount after each pass or stroke. One illustration of this class of mechanism as fitted to the Birch grinders is seen in Fig. 27. The rocking of the lever *A* in alternate directions when struck by the table dogs has the effect of rocking *B* up and down, and causing the spring-maintained pawl *C* to feed the disk, on the periphery of which fine ratchet teeth are cut. Hand adjustment is obtained by the small lever seen near the top.

CHAPTER II

CLAMPING AND LOCKING DEVICES APPLIED TO MACHINE TOOLS

Devices for clamping and locking various parts are found on practically all machine tools, and the different methods used afford a very interesting study. In considering this subject we disregard permanent fastenings—that is those which are not released and tightened as part of the operation of the machine—and take into account only those devices which are expressly designed to permit of more or less rapid loosening and tightening, to allow adjustments. There are a great many conditions under which these devices are required, and the particular type adopted may va [illegible] that is exactly suited to one case n [illegible] er. For instance, the pressure from [illegible] cient for

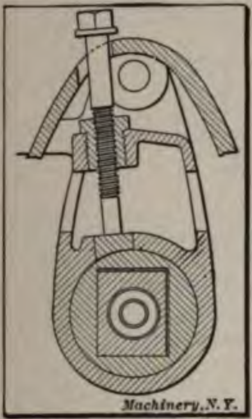

Fig. 32. Set-screw with Shoe for Clamping Sleeve

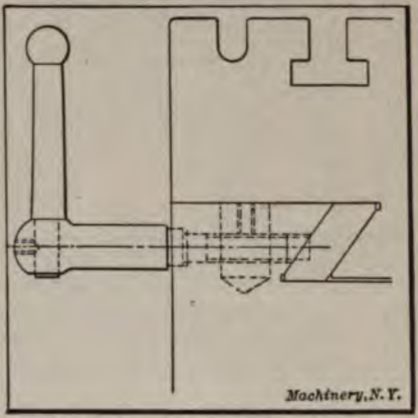

Fig. 33. Screw Recessed into Strip for Clamping Slide

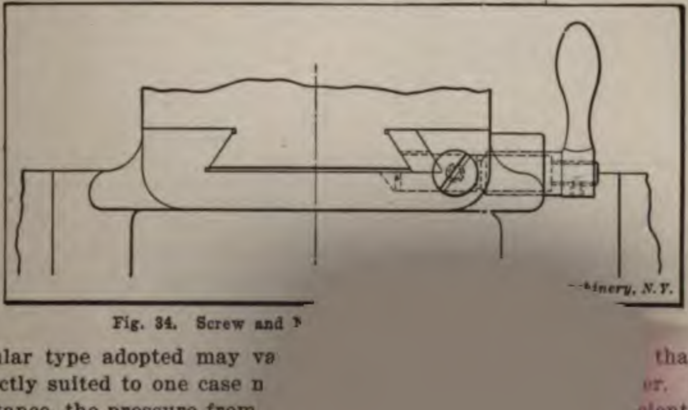

Fig. 34. Screw and [illegible]

holding some parts, but in other cases this would be an unsatisfactory method to adopt. Again, friction may be ample to hold a certain part, while in another case a positive device is necessary.

The distinction between clamping and locking which will be made in the following is this: Clamping produces a decided pressure, sufficient to enable a part of a machine to resist the shocks or vibration tending to shift it, while locking is only a method of temporarily holding a piece in position, by means of a plunger or other medium, sufficient to retain it, but without giving a powerful clamping or squeezing action. A locking device, therefore, might not be powerful enough to act as a clamping device, so that these functions must be regarded as distinct from each other. As a matter of course we say that a slide is locked, when we ought to say that it is clamped, because the parts are drawn together powerfully, and not merely prevented from shifting by a pin or other means. As a general rule it may be said that locking

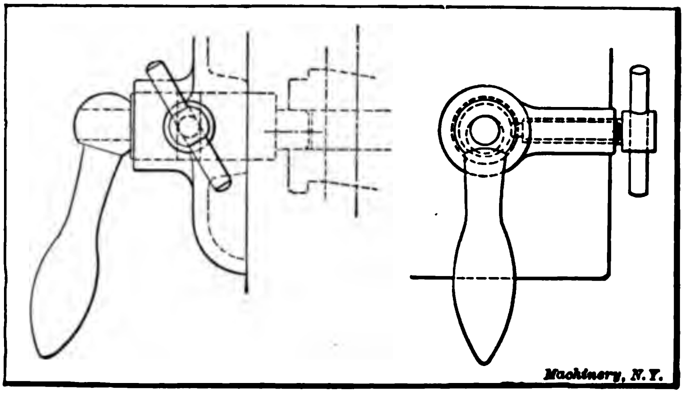

Fig. 35. Clamping Screw with End entering Groove for Clamping Stud

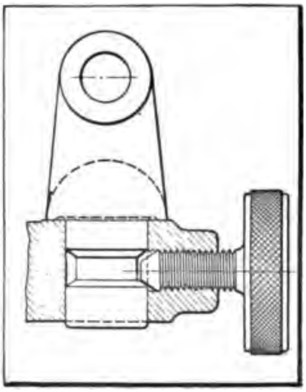

Fig. 36. Clamping Screw with Pull-down Action for Clamping Bearing

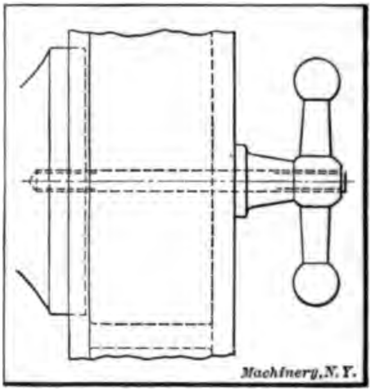

Fig. 37. Bolt and Handle for Clamping Drill Head

holds a machine part in a definite position, or in one of a series of positions previously known, by means of holes, slots, or grooves, which determine these positions; but a part may be clamped at any location, with or without the use of graduations or other means to determine the setting. In some cases, although these are not very common, locking and clamping are combined, the latter supplementing and assisting the former.

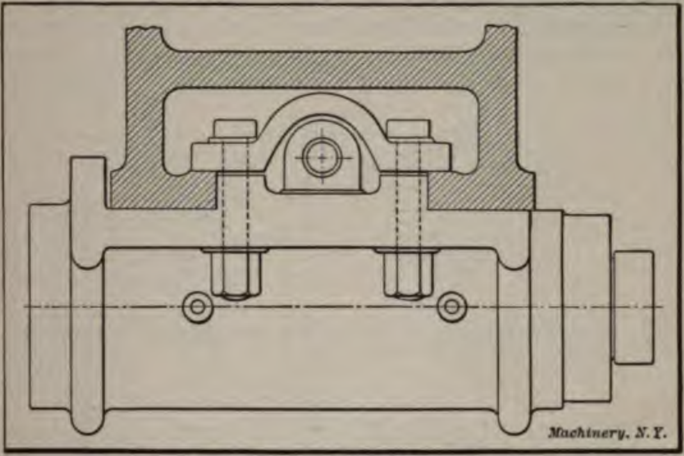
Machinery, N. Y.

Fig. 38. Showing Use of Bolts and Strap for Clamping

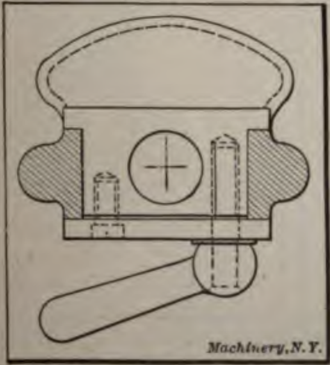
Machinery,N.Y.

Fig. 39. Clamping Screw Located on One Side

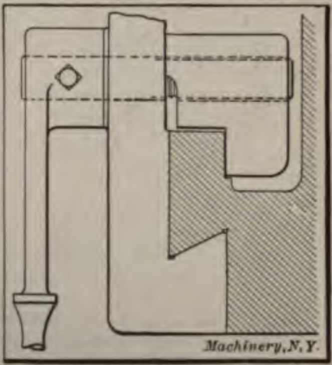
Machinery,N.Y.

Fig. 40. Clamping Device for Drill Saddle

The following selection of typical devices, representative of American, English, and German practice, will serve to illustrate the principles of clamping and locking devices. A large number of other examples, which might be shown, are but modifications of those here selected.

Clamping De

Dealing first with clamping, the set-screw pressing upon the portion that has heap device, but is open to objections. On a flat surface it is efficient, but the pressure is too local, and this construction is not adapted to withstand heavy strains without slipping. Moreover it has the bad effect of forcing the parts away from each other when screwed up, so that a fruitful source of vibration is introduced, whereas other and better methods of clamping pull the parts together and act as clamps in the true sense of the word. Usually the pressure of a set-screw point is objectionable,

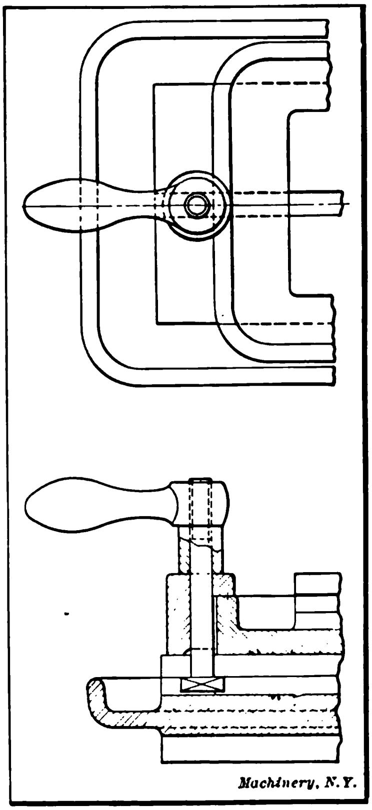
Machinery, N.Y.

Fig. 41. Clamp for Grinding Machine Swivel Table

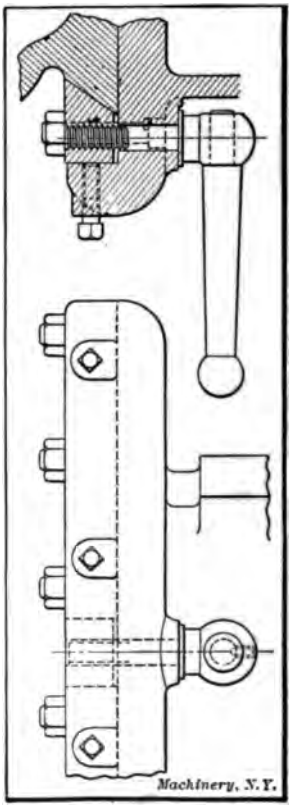
Machinery, N.Y.

Fig. 42. Clamping Arrangement for V-slide

and a soft pad or shoe is employed to avoid the marring effect otherwise met with. This pad or shoe may be shaped to correspond with the form of the surface against which it bears. Fig. 32 is an example of a set-screw in an awkward situation, this example being taken from one of the Seller's tool-grinders; the screw passes through a bushing, and presses upon a pad shaped to fit the outside of the cylindrical sleeve. In some cases the shoe or pad may be notched out to press against the V of a slide, as in Fig. 34, for locking purposes. This example is taken from a cutter-grinder. The necessity for a shoe is sometimes avoided by sinking the end of the screw into the metal, as in Fig. 33, which shows a gib clamp for a milling machine slide. In the case of a circular part, Fig. 35, a groove is turned for the locking screw to enter, this construction also preventing endwise motion of the pin to be locked. The function of the pin is to actuate a clutch for a drilling machine head. Sometimes the groove is arranged so that the screw draws the piece tightly downward to a bearing, as shown in Fig. 36.

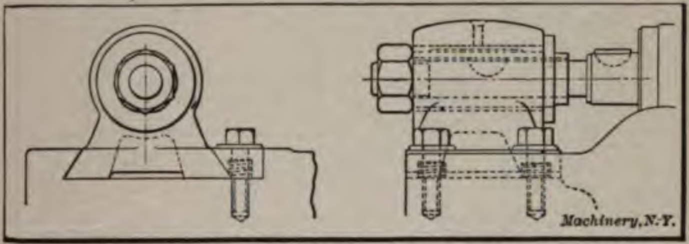

Fig. 43. Clamping Strip with Springs for Raising the Strip when Released

There are numerous instances where ordinary bolts are employed for clamping purposes; some special form of clamp or strap is often used in this connection, in order to utilize the pressure to the best advantage. Thus in the work-spindle slide of a gear-cutter, Fig. 38, four bolts are employed, and a dished clamping plate is used to clear the nut at the back of the slide. When rapid manipulation without using a spanner is desirable, a handle takes the place of the hexagon nut, as on the sensitive drill shown in Fig. 37. Another case where the clamping screw is set to one side, owing to the presence of a central hole, is seen in Fig. 39; a fillister-head screw retains the plate in position on one side, and the tightening of the handle clamps the slide against the face of the casting. This detail is taken from a cutter-grinding machine. After some time, a clamping handle will assume a position which renders its proper operation difficult, and provision may be made to compensate for wear to prevent t[illegible] [illegible]uble. Thus, in Fig. 40, the handle turning the screw whi[illegible] [illegible]lamping block is secured by a set-screw. By losenin[illegible] [illegible] be readjusted into the most convenient [illegible] [illegible]ple represents the clamp for the saddle [illegible]

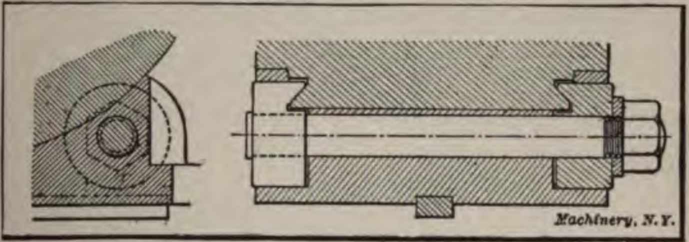

Fig. 44. Clamping Action on Opposite Sides of Swivel-block

Fig. 41 illustrates the table clamp of a grinding machine, which permits of the swiveling motion for angular grinding. This design differs from the previous instance in that the bolt is adjustable in its slot to allow for the radial movement of the table. Another specimen of clamping with a block drawn up by a bolt and handle is shown in Fig. 42, and is used for a milling machine slide. The threaded end of the bolt is tapped into the block, and the latter presses against the beveled edge of the slide. Another variation of this type of device is shown in Fig. 43, illustrating the outer bearing for a gear-cutting spindle. This spindle must be adjusted endwise; by loosening the two set-screws, the clamping strip is raised by the coiled springs, and the bearing is free to slide. Under certain conditions it is necessary to have a perfectly balanced clamping effort, as, for example, in dividing heads. An instance of this is illustrated in Fig. 44. The swivel-block has beveled edges turned at each side, and the correspondingly shaped blocks are drawn together simultaneously by the tightening of the nut; the clamps are guided in the solid metal, so that distortion is prevented. A similar

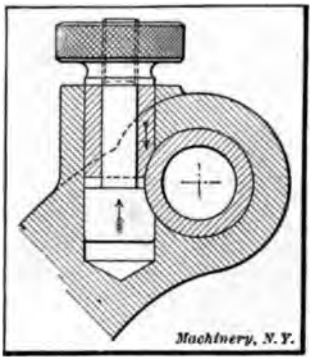

Fig. 45. Clamping with Bolt and Bushing

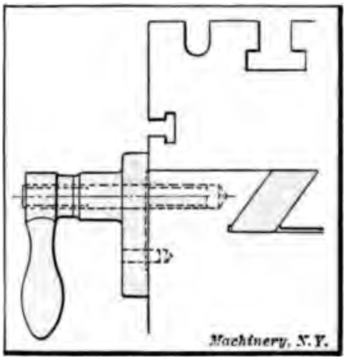

Fig. 46. Clamping Plate for Edge of Milling Machine Table

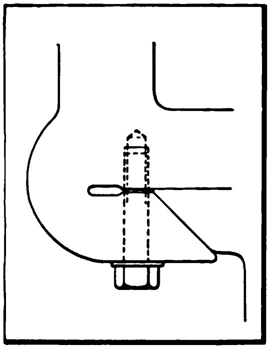

Fig. 47. Clamping Arrangement based on the Spring Action of the Metal

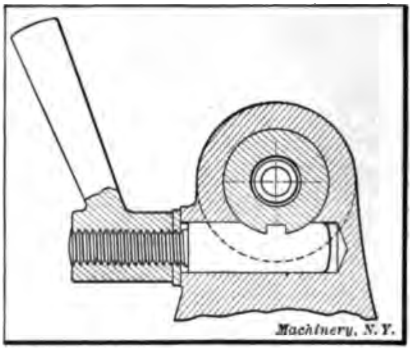

Fig. 48. Clamping Bolt for Poppet or Tailstock Spindle

principle is employed in many classes of clamping devices for cylindrical parts, such as the spindle in Fig. 45, which is secured by the pressure of the bolt head and the bushing, suitably formed to fit the spindle, and drawn down upon it by tightening the nut. The spindle is not marred, and there is no need of weakening the bearing by splitting it for the purpose of clamping.

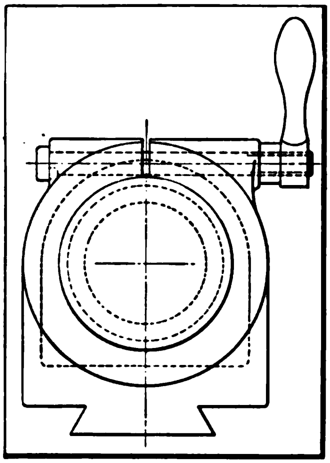

Fig. 49. Method of Clamping with a Split Bracket

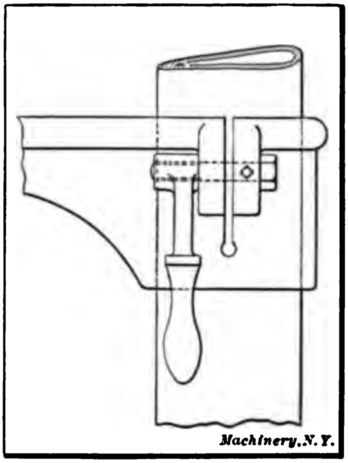

Fig. 50. Clamping a Partially Split Bracket to a Column

Three other types of clamping devices are shown in Figs. 46, 47 and 48, the first being a plate forced against the side of a milling machine table, this being an alternative construction to that in Fig. 33. Fig. 47 is a form that is possible in only a few cases, the mental except for a split or slot, and the clamping effecte

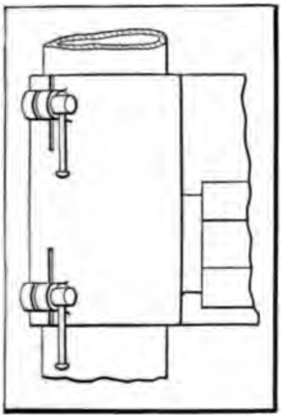

Fig. 51. Sleeve Split at Ends for Clamping

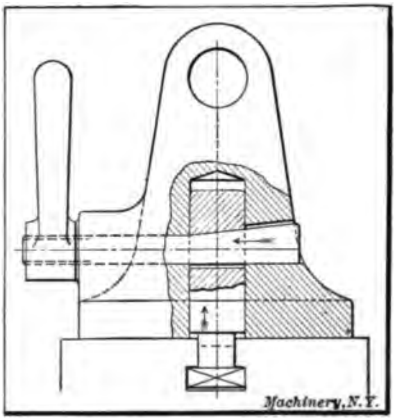

Fig. 52. Example of Wedge Clamping

action only. This detail shows the method of attaching a milling machine brace to the knee. Fig. 48 shows a clamping arrangement for a poppet or tailstock spindle, which also serves the purpose of keeping the spindle from turning.

One of the most popular methods of clamping is by the split lug, boss or collar, drawn together by a screw or screws. This provides for a very powerful grip. There are so many examples of this device that it is only possible to show a few types. In small lugs, fillister head screws are suitable for the drawing-together action, but a bolt is better for large parts, as in Fig. 49, which shows the bracket of a cutter-grinder clamped on its pillar. It is not always necessary to carry the split right through the boss; it may pass only partly through, as in Fig. 50. The bolt in this case is held by a set-screw, so that it may be turned partly around to bring the clamping handle into the most convenient position, this constituting a variation of the method in Fig. 40. Fig. 51 is another instance of partial splitting of a sleeve of a radial drill arm. An interesting type of such a method of clamping is found in the Brown & Sharpe milling machine arm; the two tightening screws are

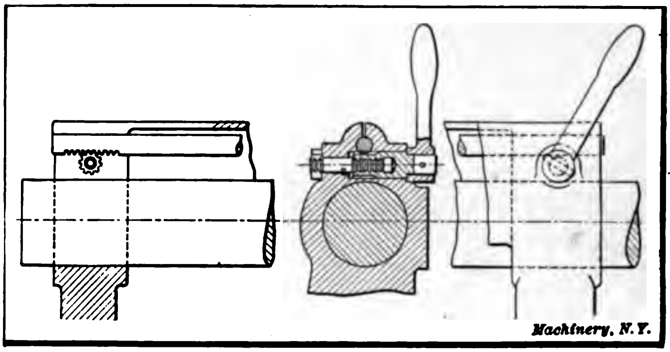

Fig. 53. Clamping Two Bearings simultaneously

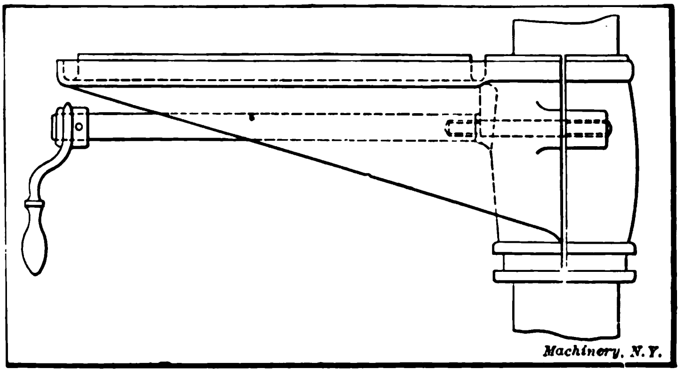

Fig. 54. Clamping Handle carried out to Edge of Table for Convenience of Operation

situated at the opposite ends of the frame, but are coupled together by a rack-bar which causes the two screws to turn simultaneously. It is, therefore, necessary to turn one screw only, as indicated in Fig. 53.

The tightening nut or lever for a split clamp is usually placed close to the boss, but in some cases it may be necessary to vary the position for convenience of manipulation. Thus in the drilling machine table, Fig. 54, the screw is prolonged into a long spindle, thus bringing the clamping handle to the front of the table, where the operator can reach it without effort or straining. Fig. 60 illustrates a split clamp which does not act in the usual manner, but serves to draw two beveled surfaces together (this example being a pillar and sleeve of a radial drill), to prevent rotation. When the clamp is loosened, the sleeve is free to turn on its ball-race.

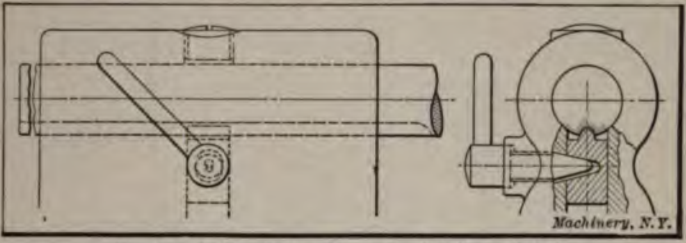

Fig. 55. Wedge Action Clamp for Grinder Tailstock

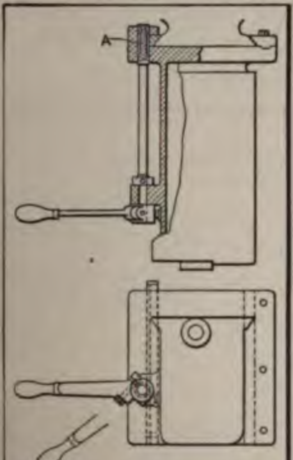

Fig. 56. Long Strip for Clamping Knee of Milling Machine

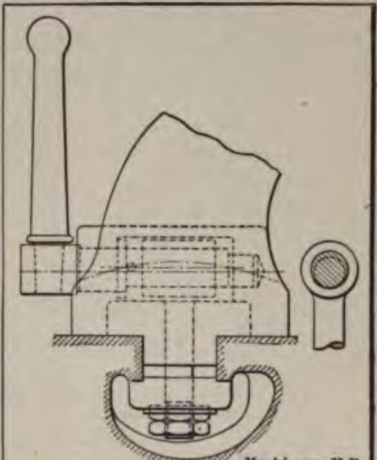

Fig. 57. Eccentric Clamp for Tailstock

Wedge action is utilized for clamping, in numerous cases, instead of direct screw pressure, and is often more suitable for certain purposes. Fig. 52 is representative of several such designs, this example being the clamp for a grinder [illegible] on is like that of a cotter. A

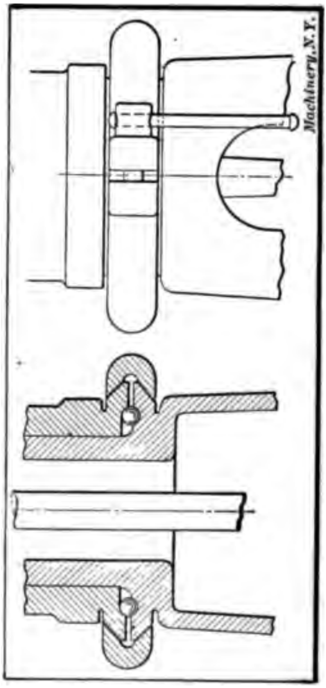

Fig. 60. Clamping Radial Drill Sleeve to Column

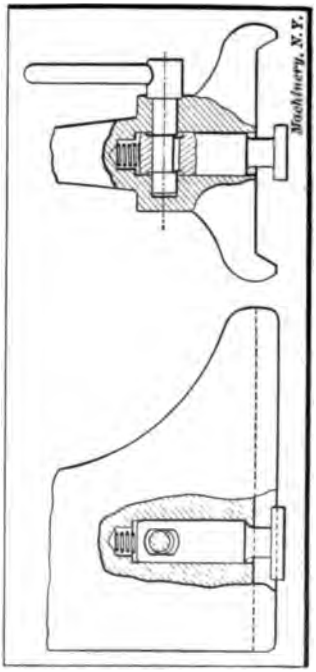

Fig. 59. Eccentric Action Clamping Device used on Bench Lathe

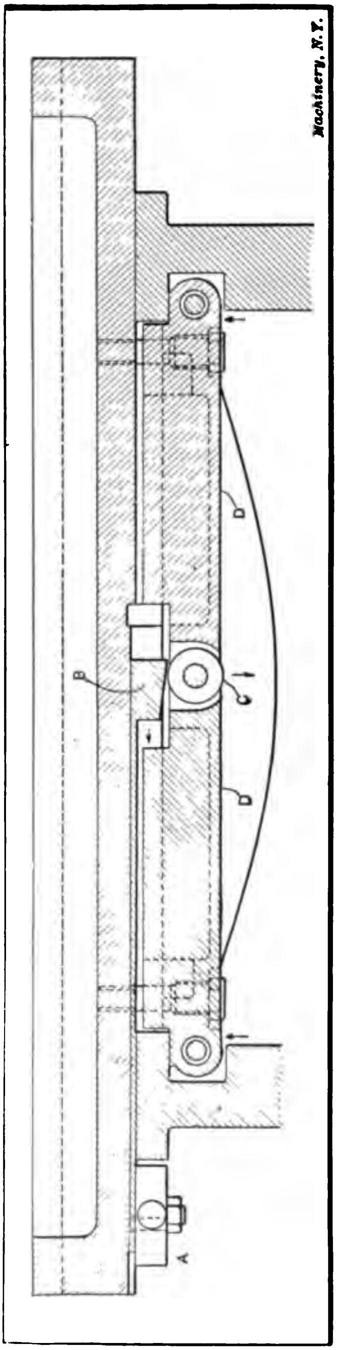

Fig. 58. Clamping Device for Planer Cross-rail

similar principle is employed in Fig. 55 where the overhanging arm of a special grinding machine is held by the forcing upward of a block through the screwing in of a tapered plug. The groove in the arm also prevents the latter from twisting.

Fig. 56 shows the principle of a clamping arrangement used by Messrs. Alfred Herbert, Ltd., on their milling machines. The object is to clamp the entire length of the knee, instead of clamping at one location only, the wedge strip being forced downward by turning the handle, which causes the pinion *A* to rotate and force the strip along. Another instance of wedge action combined with levers, is seen in Fig. 58, which shows the Whitcomb-Blaisdell planer cross-rail fastening. When the handle in the disk *A* is pulled over, it draws the strip and wedge *B* along, and the latter presses against the roller *C*, which is mounted on the pivot pin of the levers *D*. These levers are forced outward, and as they pivot on the screws near their ends, they are caused to press against the inside of the uprights, and thus pull the cross-rail tightly against the faces of the housings. Fig. 61 shows a multiple clamping arrangement, used on multiple dividing centers. The object is to bind the four spindles simultaneously. When the right- and left-

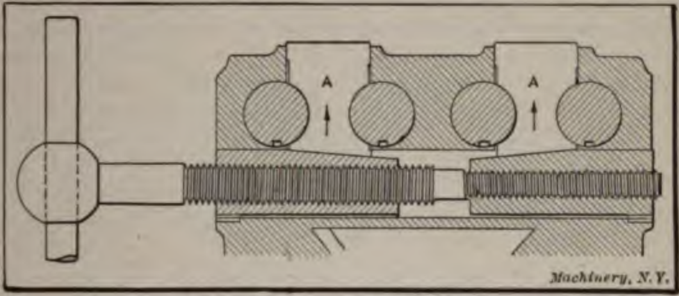

Fig. 61. Clamping Four Spindles simultaneously

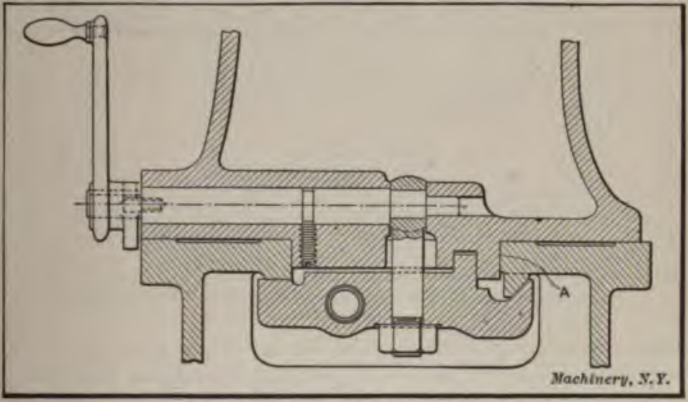

Fig. 62. Eccentric Action Clamping Device used on Chucking Lathe

hand screw is turned, it draws the two wedges together, and these push the blocks *A* upward, thus binding the spindles.

Eccentric action is also employed extensively, and has the advantage of being more rapid and convenient for some kinds of clamping than a screw or wedge. This action is particularly handy when the clamping and unclamping is very frequent. An eccentric device applied to a lathe tail-stock is illustrated in Fig. 57. The nuts at the bottom of the clamping plate allow for adjustment to make the eccentric act at the proper position of the handle. A modified form of the same type is seen in Fig. 59, which is used for a bench lathe, while an arrangement for the turret saddle of a chucking lathe is shown in Fig. 62. The clamping plate here is designed to pull the saddle over against the edge *A* of the bed, so that a constant alignment is preserved. The tightening lever has stop lugs, which abut against studs, screwed into the face adjacent to the boss, and arrest the lever at definite positions. An instance of duplex clamping, applied to the head of a vertical milling machine, is shown in Fig. 63. The clamping rod passing through the casting has slightly eccentric ends, and these force the lugs upon them in an outward direction when the lever is pulled, thus drawing the plates or clamping strips against the back edges of the projecting ways of the column. Adjustment is made by means of the threaded ends and the nuts.

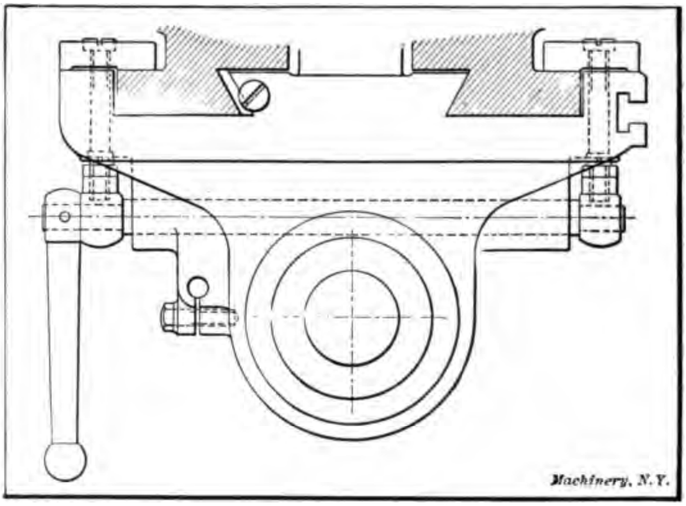

Fig. 63. Eccentric Clamping Arrangement for Vertical Milling Machine Head

Provision has occasionally to be included for permitting a pivoting or "throw-back" action in connection with clamping. Very frequently a pivoted eye-bolt meets the requirements, or alternatively a loop or strap fitted, as shown in Fig. 64, to a hinged steady-rest. A different method is to employ bolts in T-slots, Fig. 65, the two marked *A* being used to hold the bracket down, for steadying the arbor support of a gear-cutter. The bracket is hinged on the pivot-pin in the plate *B*, and the latter remains clamped in position by its two bolts. When the bracket has to be thrown back, it is only necessary to slacken the nuts *A*, and slide the bolts out of the slots. Another point with reference to clamping is that power is sometimes gained by using gears for effecting a specially tight grip. There is one type of lathe tailstock in which the clamping bolt is turned by a spur gear actuated by a pinion, on the shaft of which the spanner is placed, thus giving a very powerful grip for high-speed work.

Locking Devices

Taking up now the consideration of locking devices, it should be mentioned that these may be classified as positive locks and friction locks, the latter being obviously unsatisfactory in many cases where the risk of any slip would be detrimental. The simplest lock, perhaps, is that used for the back-gears of a lathe or other machine, where a bolt is slid into a slot to encounter a projection on the cone pulley. The pin may also be pushed endwise into a hole, the relative positions of in- and out-of-gear being controlled by a spring. This kind of device is also employed to lock the pulleys of grinding heads when dead-center work is being done. Fig. 66 represents a lock adopted on a high-speed lathe, the locking bolt being tapered to fit in the slot in the adjacent gear, the object being to prevent back-lash. A typical positive lock is shown in Fig. 67, this example being the pin for securing the eccentric spindle of a back-gear. The pin may be straight or parallel, as shown, but more frequently it is tapered. Slides or other parts are frequently locked by tapered pins.

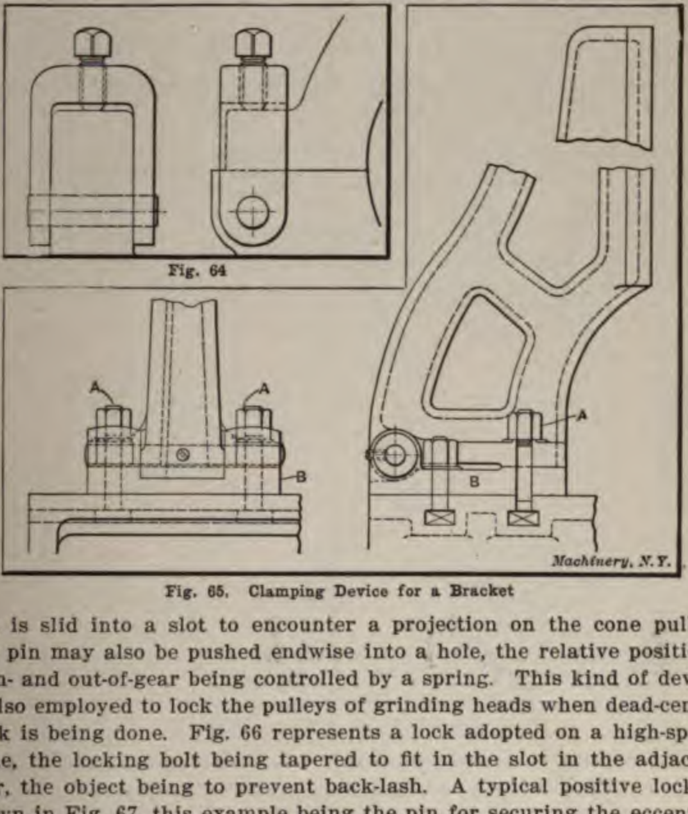

Fig. 64

Fig. 65. Clamping Device for a Bracket

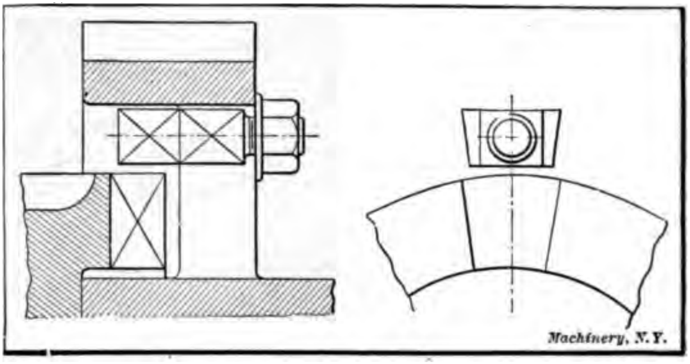
Machinery, N.Y.

Fig. 66. Locking Pin for Lathe-head Gears

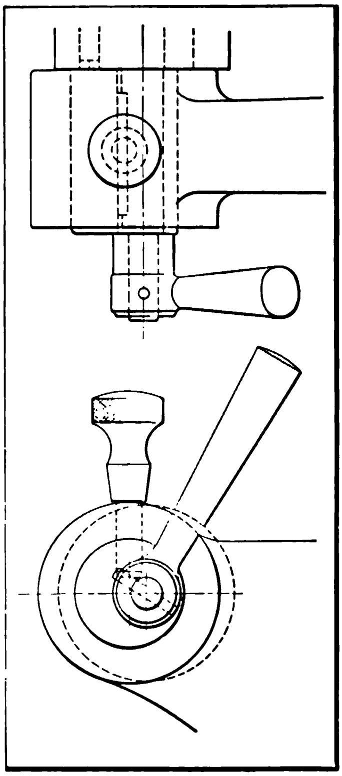

Fig. 67. Eccentric Spindle Locking Pin

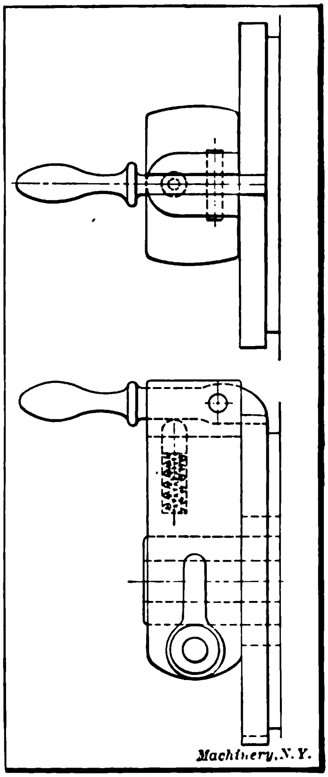
Machinery,N.Y.

Fig. 68. Locking Arrangement for Indexing Lever

Fig. 69 is a locking device employed on the open-spindle turret lathes of Messrs. John Lang & Sons, to hold the spindle while the chuck on the nose is being tightened or loosened with a spanner. When the lock is thrown downward, the spindle is free to rotate. Two other positive locks are illustrated in Figs. 70 and 73, one for a turret lathe of the type used largely in England, the other for a central-hole type of turret. In both cases a tapered part enters slots in the periphery of the indexing disks. The wedge strip beside the plunger in Fig. 73 takes up play due to wear.

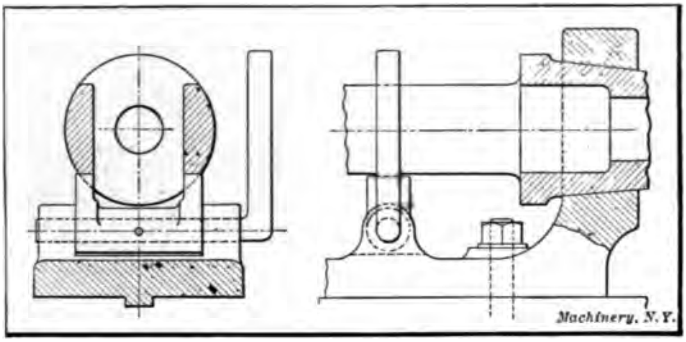

Fig. 69. Lock for Open Spindle of John Lang & Sons Turret Lathe

Positive locks are also seen in Figs. 68 and 72. In Fig. 68 a disk on the body of a sleeve has notches, into any one of which the pivoted catch drops, under the action of a coiled spring, thus holding the sleeve in one position. Fig. 72 shows a quick-withdrawing device for screw-cutting; when the catch *A* drops into engagement with the toothed disk *B* the rotation of the latter has the effect of turning the quick-pitched screw *C*. The spring plunger *D* in the lever which carries *A*, lo the latter in either the "in" or "out" position, according to wheth

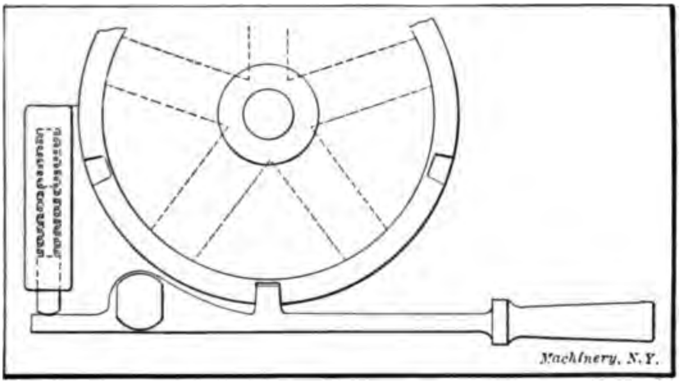

Fig. 70. Locking Turret with External Lever

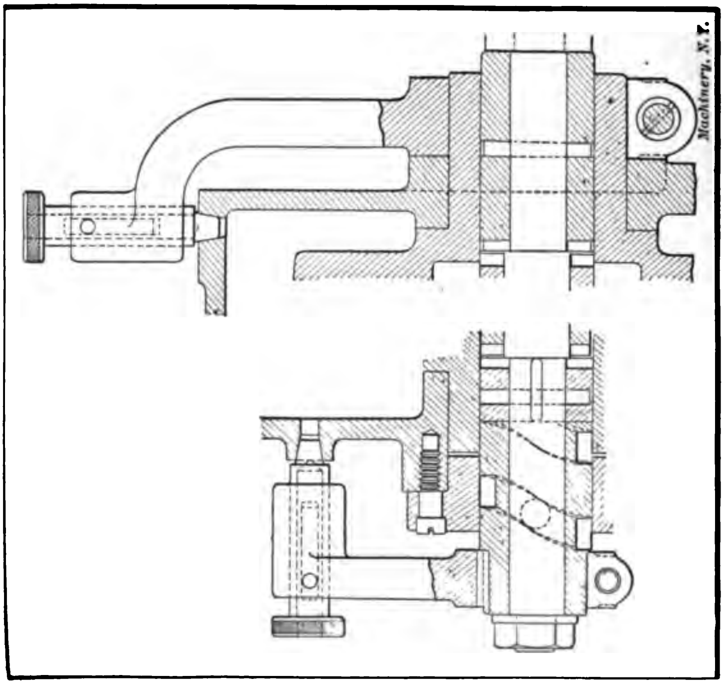

Fig. 71. Locking Plungers with Knobs for Withdrawal

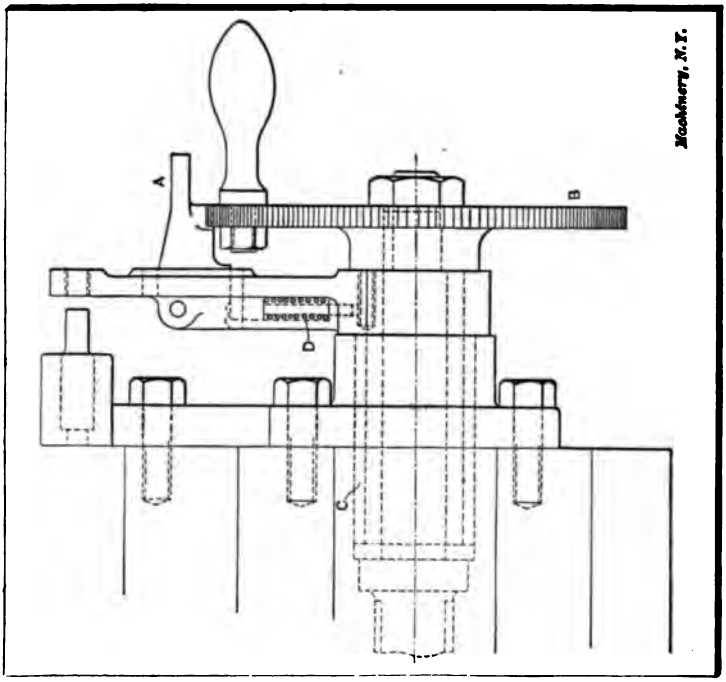

Fig. 72. Locking Arrangement for Quick Withdrawal Device on Threading Lathe

plunger point slips into either the one or the other of the countersinks in the inner end of *A*.

The spring plunger is a familiar locking device, and is found in varied forms, usually embodying a pointed or tapered plunger which obviates back-lash. A common instance is that shown in Fig. 74 used for a speed- or feed-change lever. The plunger is contained within the handle, and its point slips into any one of the countersinks in the quadrant. The arrangement may also be as in Fig. 71, with a pull-back device for each plunger, as the latter in this case enter more deeply into their locking holes. An alternative construction is shown in Fig. 75, where the block which moves or slides the spur gears endwise is locked by a tapered sleeve entering any one of four tapered recesses in the locking plate. A spring inside the sleeve keeps it in position. Fig. 76 illustrates another method of withdrawing a plunger, this method being used on the familiar Hendey-Norton change-gear device, in which

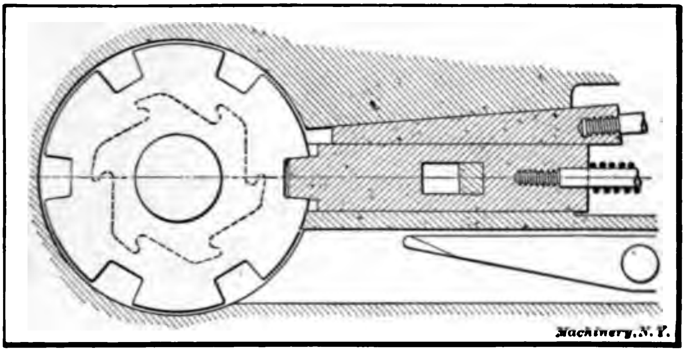
Machinery, N.Y.

Fig. 73. Plunger Lock for Turret

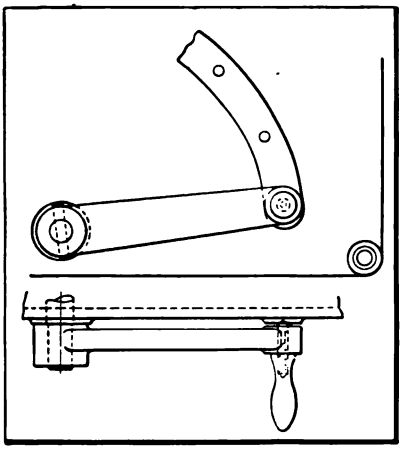

Fig. 74. Common Type of Spring Plunger for Locking Lever

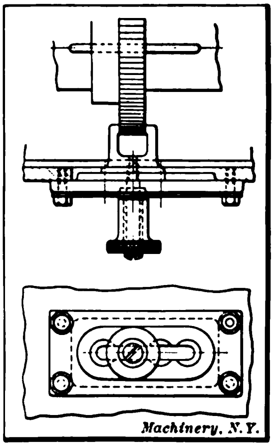
Machinery, N.Y.

Fig. 75. Plunger Locking Arrangement for Gear Box

the act of grasping the handle firmly withdraws the plunger, ready for the movement to another hole. Still another method, employed on a milling machine dividing head is represented in Fig. 79; the locking plunger in this example is pulled back by a rack and pinion device, and the pinion sleeve is itself locked by drawing it backward until the pin near its end slips into the slot in a bushing as shown.

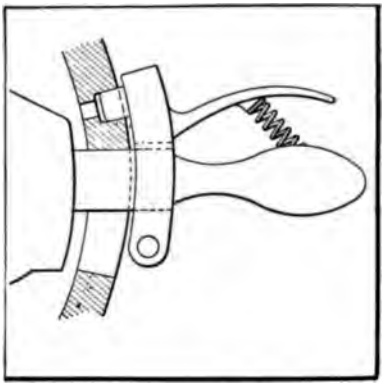

Fig. 76. Withdrawing and Locking Device on Change-gear Box

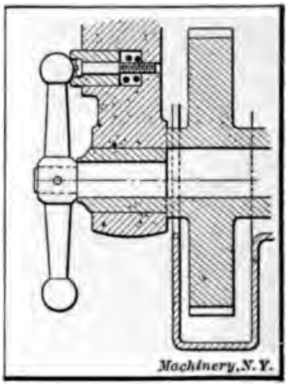

Fig. 77. Spring Lock for Back-gear Lever

Fig. 78 shows a different construction, also for a dividing head, the plunger *A* has only a pull-back action, without a positive lock, while the other plunger *B* is provided with a pin which slips into a sort of bayonet catch, and prevents the plunger from moving forward under the action of the spring. The locking plunger in Fig. 80 (for coupling in the back-gears of a vertical milling machine), is held out of position by the pin *A*, but a quarter turn of the plunger allows this pin to slip into a groove inside the bore and thus let the plunger into any one of the holes in the disk below. Finally, the Brown and Sharpe back-gear lock, Fig. 77, represents an ingenious method of retaining automatically the ball ends of a lever in position.

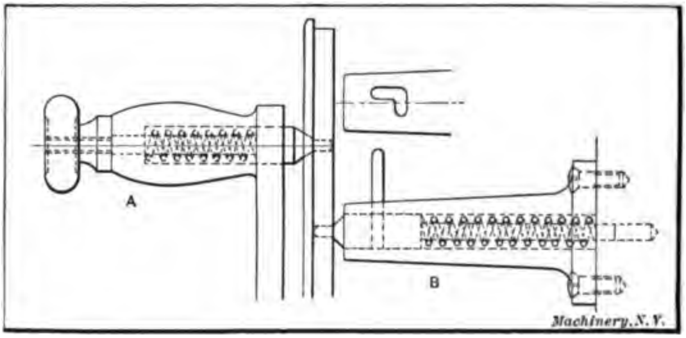

Fig. 78. Locking Plungers for Index Plate and Lever

The succeeding illustrations are those of friction locking devices.

Fig. 81 might be classed as a clamping device, but as its only purpose is to allow locking in different positions, it should logically be classed in the latter category. The split handle or lever is employed

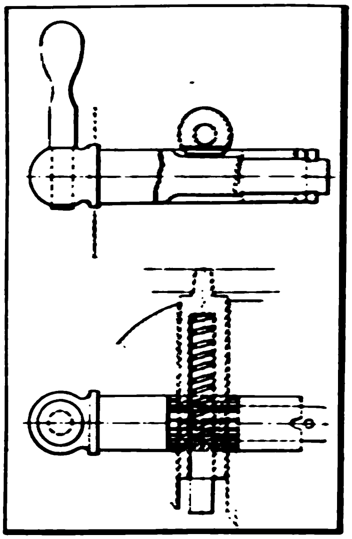

Fig. 79. Withdrawing and Locking Device for Spring Plunger

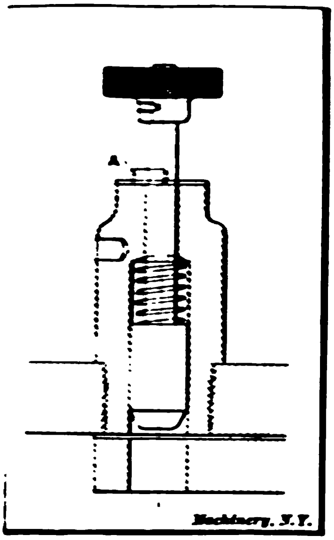

Fig. 80. Locking Plunger with Locking Pin

to work the cross-slide of a turret lathe. In order that the operator may have the handle in the most convenient and least fatiguing position, it is adjustable around the pin on which it is mounted, by

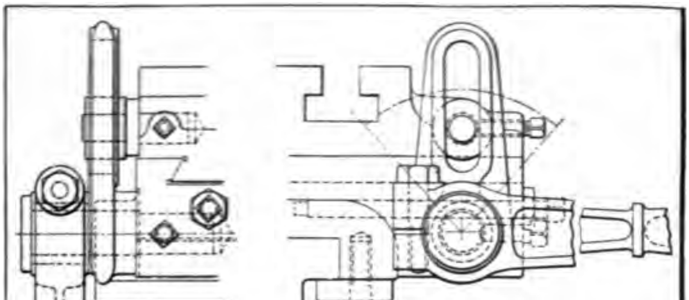

Fig. 81. Cross-slide Lever with Split Hub for Locking in Various Positions

simply loosening the binding screw. An alternative method is to taper the inside of the lever, as in Fig. 82, to match the outside of the slotted levers shown, and force the two together by a nut. This constitutes a friction clutch, and is an idea that is found in many locking devices, especially for locking gears and other parts together temporarily, and for micrometer and similar devices. Other arrangements for micrometer dials are shown in Figs. 83 and 84, for locking the dials at zero when desired. Fig. 83 has a small bolt tightened by a knurled-head nut, the head of the bolt lying in a circular T-slot in the dial. When the nut is screwed up, the dial is locked to the handwheel and turns with it. In Fig. 84 the point of the central threaded plunger forces a small block outward against the bore of the dial, and locks the latter.

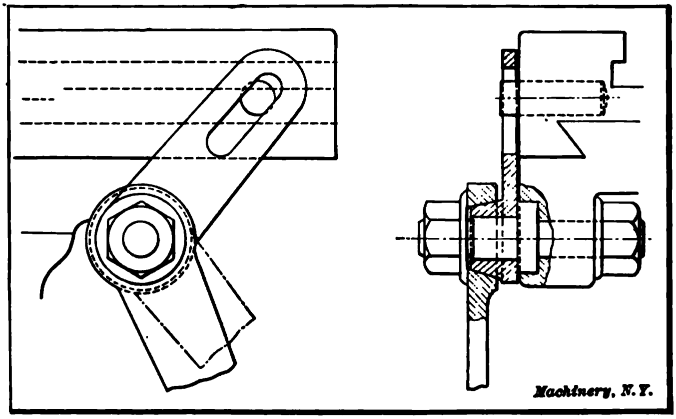

Fig. 82. Cross-slide Lever with Friction Lock

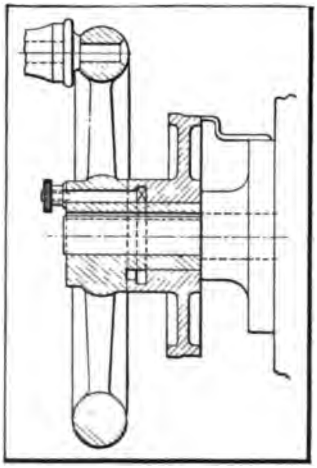

Fig. 83. T-bolt Friction Lock for Micrometer Dial

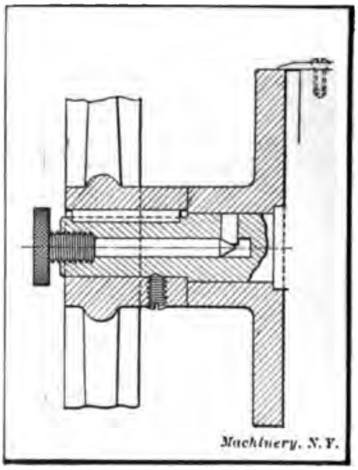

Fig. 84. Pin Friction Lock for Micrometer Dial

Ratchets are occasionally utilized for locking purposes, one instance being in wire-feeds, where the feeding dog is held on its supporting rod by a pawl entering into the teeth of the ratchet bar.

No. 45. Drop Forging.—Lay-out of Plant; Methods of Drop Forging; Dies.

No. 46. Hardening and Tempering.—Hardening Plants; Treating High-Speed Steel; Hardening Gages.

No. 47. Electric Overhead Cranes.—Design and Calculation.

No. 48. Files and Filing.—Types of Files; Using and Making Files.

No. 49. Girders for Electric Overhead Cranes.

No. 50. Principles and Practice of Assembling Machine Tools, Part I.

No. 51. Principles and Practice of Assembling Machine Tools, Part II.

No. 52. Advanced Shop Arithmetic for the Machinist.

No. 53. Use of Logarithms and Logarithmic Tables.

No. 54. Solution of Triangles, Part I.—Methods, Rules and Examples.

No. 55. Solution of Triangles, Part II.—Tables of Natural Functions.

No. 56. Ball Bearings.—Principles of Design and Construction.

No. 57. Metal Spinning.—Machines, Tools and Methods Used.

No. 58. Helical and Elliptic Springs.—Calculation and Design.

No. 59. Machines, Tools and Methods of Automobile Manufacture.

No. 60. Construction and Manufacture of Automobiles.

No. 61. Blacksmith Shop Practice.—Model Blacksmith Shop; Welding; Forging of Hooks and Chains; Miscellaneous.

No. 62. Hardness and Durability Testing of Metals.

No. 63. Heat Treatment of Steel.—Hardening, Tempering, Case-Hardening.

No. 64. Gage Making and Lapping.

No. 65. Formulas and Constants for Gas Engine Design.

No. 66. Heating and Ventilation of Shops and Offices.

No. 67. Boilers.

No. 68. Boiler Furnaces and Chimneys.

No. 69. Feed Water Appliances.

No. 70. Steam Engines.

No. 71. Steam Turbines.

No. 72. Pumps, Condensers, Steam and Water Piping.

No. 73. Principles and Applications of Electricity.—Static Electricity; Electrical Measurements; Batteries.

No. 74 Principles and Applications of Electricity.—Magnetism; Electro-Magnetism; Electro-Plating.

No. 75. Principles and Applications of Electricity.—Dynamos; Motors; Electric Railways.

No. 76. Principles and Applications of Electricity.—Electric Lighting.

No. 77. Principles and Applications of Electricity.—Telegraph and Telephone.

No. 78. Principles and Applications of Electricity.—Transmission of Power.

No. 79. Locomotive Building.—Main and Side Rods.

No. 80. Locomotive Building.—Wheels; Axles; Driving Boxes.

No. 81. Locomotive Building.—Cylinders and Frames.

No. 82. Locomotive Building.—Valve Motion.

No. 83. Locomotive Building.—Boiler Shop Practice.

No. 84. Locomotive Building.—Erecting.

No. 85. Mechanical Drawing. — Instruments; Materials; Geometrical Problems.

No. 86. Mechanical Drawing.—Projection.

No. 87. Mechanical Drawing.—Machine Details.

No. 88. Mechanical Drawing.—Machine Details.

No. 89. The Theory of Shrinkage and Forced Fits.

No. 90. Railway Repair Shop Practice.

No. 91. Operation of Machine Tools.—The Lathe, Part I.

No. 92. Operation of Machine Tools.—The Lathe, Part II.

No. 93. Operation of Machine Tools.—Planer, Shaper, Slotter.

No. 94. Operation of Machine Tools.—Drilling Machines.

No. 95. Operation of Machine Tools.—Boring Machines.

No. 96. Operation of Machine Tools.—Milling Machines, Part I.

No. 97. Operation of Machine Tools.—Milling Machines, Part II.

No. 98. Operation of Machine Tools.—Grinding Machines.

No. 99. Automatic Screw Machine Practice.—Operation of the Brown & Sharpe Automatic Screw Machine.

No. 100. Automatic Screw Machine Practice.—Designing and Cutting Cams for the Automatic Screw Machine.

No. 101. Automatic Screw Machine Practice.—Circular Forming and Cut-off Tools.

No. 102. Automatic Screw Machine Practice.—External Cutting Tools.

No. 103. Automatic Screw Machine Practice.—Internal Cutting Tools.

No. 104. Automatic Screw Machine Practice.—Threading Operations.

No. 105. Automatic Screw Machine Practice.—Knurling Operations.

No. 106. Automatic Screw Machine Practice.—Cross Drilling, Burring and Slotting Operations.

No. 107. Drop Forging Dies and Die-Sinking.—A Complete Treatise on Die-sinking Methods.

No. 108. Die Casting Machines.

No. 109. Die Casting.—Methods and Machines Used; the Making of Dies for Die Casting.

No. 110. The Extrusion of Metals.—Machines and Methods Used in a Little-known Field of Metal Working.

No. 111. Lathe Bed Design.

No. 112. Machine Stops, Trips and Locking Devices.—Also includes Reversing Mechanisms and Clamping Devices.

ADDITIONAL TITLES WILL BE ANNOUNCED IN MACHINERY FROM TIME TO TIME.

MACHINERY'S REFERENCE BOOKS

This book is one of a remarkably successful series of 25-cent Reference Books listed below. These books were originated by MACHINERY and comprise a complete working library of mechanical literature, each book covering one subject. The price of each book is 25 cents (one shilling) delivered anywhere in the world.

CLASSIFIED LIST OF REFERENCE BOOKS

GENERAL MACHINE SHOP PRACTICE

No. 7. Lathe and Planer Tools.
No. 10. Examples of Machine Shop Practice.
No. 25. Deep Hole Drilling.
No. 32. Screw Thread Cutting.
No. 48. Files and Filing.
No. 50. Principles and Practice of Assembling Machine Tools, Part I.
No. 51. Principles and Practice of Assembling Machine Tools, Part II.
No. 57. Metal Spinning.
No. 59. Machines, Tools and Methods of Automobile Manufacture.
No. 91. Operation of Machine Tools.—The Lathe, Part I.
No. 92. Operation of Machine Tools.—The Lathe, Part II.
No. 93. Operation of Machine Tools. — Planer, Shaper, Slotter.
No. 94. Operation of Machine Tools.—Drilling Machines.
No. 95. Operation of Machine Tools.—Boring Machines.
No. 96. Operation of Machine Tools.—Milling Machines, Part I.
No. 97. Operation of Machine Tools.—Milling Machines, Part II.
No. 98. Operation of Machine Tools.—Grinding Machines.
No. 116. Manufacture of Steel Balls.
No. 120. Arbors and Work Holding Devices.

TOOLMAKING

No. 21. Measuring Tools.
No. 31. Screw Thread Tools and Gages.
No. 64. Gage Making and Lapping.
No. 107. Drop Forging Dies and Die Sinking.

HARDENING AND TEMPERING

No. 46. Hardening and Tempering.
No. 63. Heat-treatment of Steel.

JIGS AND FIXTURES

No. 3. Drill Jigs.
No. 4. Milling Fixtures.
No. 41. Jigs and Fixtures, Part I.
No. 42. Jigs and Fixtures, Part II.
No. 43. Jigs and Fixtures, Part III.

PUNCH AND DIE WORK

No. 6. Punch and Die Work.
No. 13. Blanking Dies.
No. 26. Modern Punch and Die Construction.

AUTOMATIC SCREW MACHINE WORK

No. 99. Operation of Brown & Sharpe Automatic Screw Machines.
No. 100. Designing and Cutting Cams for the Automatic Screw Machine.
No. 101. Circular Forming and Cut-off Tools for Automatic Screw Machines.
No. 102. External Cutting Tools for Automatic Screw Machines.
No. 103. Internal Cutting Tools for Automatic Screw Machines.
No. 104. Threading Operations on Automatic Screw Machines.
No. 105. Knurling Operations on Automatic Screw Machines.
No. 106. Cross Drilling, Burring and Slotting Operations on Automatic Screw Machines.

SHOP CALCULATIONS

No. 18. Shop Arithmetic for the Machinist.
No. 52. Advanced Shop Arithmetic for the Machinist.
No. 53. The Use of Logarithms—Complete Logarithmic Tables.
No. 54. Solution of Triangles, Part I.
No. 55. Solution of Triangles, Part II.

THEORETICAL MECHANICS

No. 5. First Principles of Theoretical Mechanics.
No. 19. Use of Formulas in Mechanics.

GEARING

No. 1. Worm Gearing.
No. 15. Spur Gearing.
No. 20. Spiral Gearing.
No. 37. Bevel Gearing.

GENERAL MACHINE DESIGN

No. 9. Designing and Cutting Cams.
No. 11. Bearings.
No. 17. Strength of Cylinders.
No. 22. Calculation of Elements of Machine Design.
No. 24. Examples of Calculating Designs.
No. 40. Flywheels.
No. 56. Ball Bearings.
No. 58. Helical and Elliptic Springs.
No. 89. The Theory of Shrinkage and Forced Fits.

MACHINE TOOL DESIGN

No. 14. Details of Machine Tool Design.
No. 16. Machine Tool Drives.
No. 111. Lathe Bed Design.
No. 112. Machine Stops, Trips and Locking Devices.

CRANE DESIGN

No. 23. Theory of Crane Design.
No. 47. Electric Overhead Cranes.
No. 49. Girders for Electric Overhead Cranes.

STEAM AND GAS ENGINES

No. 65. Formulas and Constants for Gas Engine Design.

SEE INSIDE BACK COVER FOR ADDITIONAL TITLES