A MANUAL

OF

LOCOMOTIVE ENGINEERING.

PREFACE.

IN this work the Locomotive Engine is looked at chiefly from the point of view of the Designer or Locomotive Draughtsman, and the scope and treatment have been mainly determined with reference to his needs. The requirements of the Engineer generally, who may desire to ascertain the practice of the Locomotive Engineer, and the needs of the Student have, however, also been kept steadily in view.

The aim has been not only to set out the most successful and generally approved modern practice, but to set it out in such manner as to aid in its intelligent adaptation, in accordance with general mechanical principles, to changed conditions or to further development. At the same time the book is intended to be of a thoroughly practical nature; and the calculations which it has been necessary to employ are accordingly suited, as far as possible, for every day use in the Engineer's Drawing Office.

There is given, after a brief historical introduction, an enumeration of particulars concerning the leading types and classes of locomotives at present in use in this country, both simple and compound. This is followed by a description of the methods of determining those factors or elements in the design of a locomotive which in large measure furnish the data for the subsequent working out of detail, but which themselves arise immediately from the conditions as to speed, loads, character of the roads, and so forth, prescribed, it may almost be said, to the Locomotive Engineer from without. The detailed construction and design of the various parts and fittings of the modern locomotive are then dealt with in a series of chapters ending with the eighteenth, and material for a comparison between British and foreign practice is also afforded by the chapter on American and Continental locomotives.

The operations of the workshop, and questions of cost, fall in general outside the scope of such a work as the present. They are, however, it will be seen, touched upon to some extent wherever they bear immediately on the design or maintenance of the locomotive—as, for example, in respect to the application of steel in boiler construction in Chapter xiii., and in regard to repairs and renewals in Chapter xxii.

A record and analysis of a series of experimental runs form the subject of Chapter xix. This chapter it is hoped will be found to afford some useful data for the Designer, and to give exact information as to the capabilities of the modern British express locomotive. An account of these trials has previously appeared in the *Proceedings of the Institution of Civil Engineers*. Thanks are due to the Institution for permission to reproduce the paper here.

The work is largely based upon experience gained in the drawing office and workshops under some of the leading locomotive engineers in this country, supplemented by information kindly furnished by the locomotive departments of the various Railway Companies. The large comparative Table forming Appendix B is compiled from information thus supplied.

The Author's best thanks are due especially to the following locomotive engineers for particulars concerning engines designed by them :—Messrs. W. Adams, J. A. F. Aspinal, F. W. Webb, J. Holden, W. Kirtley, Jas. Stirling, W. Worsdell, H. Pryce, H. A. Ivatt, J. M'Intosh, D. Jones, T. F. Clark, and G. Estall, and to Mr. T. Coates for drawings of the Rocket and other old engines. Thanks are also due to Mr. A. F. Ravenshear for assistance in the final preparation for the press, and to Messrs. G. R. Sisterson, L. Gates, and E. Sharples for preparing details, diagrams, and for other aid,

CHAPTER VI.

PISTONS, PISTON-RODS, CROSSHEADS, AND SLIDE-BARS.

CHAPTER VII.

CONNECTING AND COUPLING-RODS.

CHAPTER VIII.

WHEELS AND AXLES, AXLE-BOXES, HORNBLOCKS, AND BEARING SPRINGS.

CHAPTER IX.

BALANCING.

CHAPTER X.

VALVE GEAR.

CHAPTER XI.

SLIDE VALVES AND VALVE GEAR DETAILS.

CHAPTER XII.

FRAMING; BOGIES AND AXLE-TRUCKS; RADIAL AXLE-BOXES.

CHAPTER XIII.

BOILERS.

CHAPTER XIV.

SMOKEBOX; BLAST PIPE; FIREBOX FITTINGS.

CHAPTER XV.

BOILER MOUNTINGS.

CHAPTER XVI.

TENDERS.

CHAPTER XVII.

RAILWAY BRAKES.

CHAPTER XVIII.

LUBRICATION.

CHAPTER XIX.

CONSUMPTION OF FUEL, EVAPORATION, AND ENGINE EFFICIENCY.

Thanks are due for the loan of blocks employed in the chapter on Continental Locomotives to the authors and publishers of the following works:—*Locomotive et Matériel Roulant*, and *Traité Pratique de la Machine Locomotive* by M. Demoulin; *La Machine Locomotive* by E. Sauvage; and *Das Eisenbahn-maschinenwesen Der Gegenwart*—the section by A. von Borries.

TABLES.

APPENDICES.

that time among engineers—despite Trevethick's partial success—was that the locomotive had not sufficient adhesion to ascend a moderate incline or draw heavy loads unless the wheels were geared to work on a corresponding rack on the rails.

In 1811 Blenkinsop of Leeds patented and constructed an engine (fig. 4) on this plan, which was tried on a railroad running from Middleton to Leeds. The weight of this engine was about 5 tons; and it was said to convey about 90 tons on a level at 4 miles an hour, or 15 tons up a gradient of 1 in 20. The rack rail was used until it was proved by Blackett that simple adhesion on the smooth rail was sufficient. Blenkinsop's engine had the important feature of two cylinders working alternately on the same shaft. The next invention brought forward was one by Chapman of Newcastle in 1812. His plan consisted in stretching a chain the entire length of the course to be traversed. This chain passed round a grooved wheel under the engine, by rotating which the locomotive pulled itself along the railway. In 1813 a remarkable experiment in locomotion was conceived by Brunton. This inventor took out a patent for a machine with legs like a horse, which were worked by a kind of parallel motion from off the cylinders. Then followed the engine of Blackett of Wylam and his colliery inspector, W. Hedley. After many trials and experiments and much perseverance, they found that the weight of the engine properly distributed over the wheels was sufficient to enable it to draw eight or nine loaded wagons without any rack or gearing. The engine as at first constructed did not steam well, not being fitted with a blast pipe. This was not furnished until after the engine was supplied with a new boiler and cylinders. The new boiler was of wrought-iron and had a return flue. The cylinders were vertical, the piston-rods working on beams, from which connecting-rods

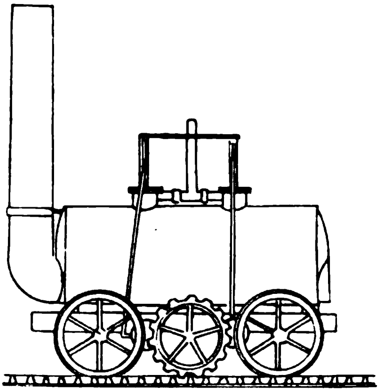

Fig. 4.—Blenkinsop's Rack Locomotive, 1811.

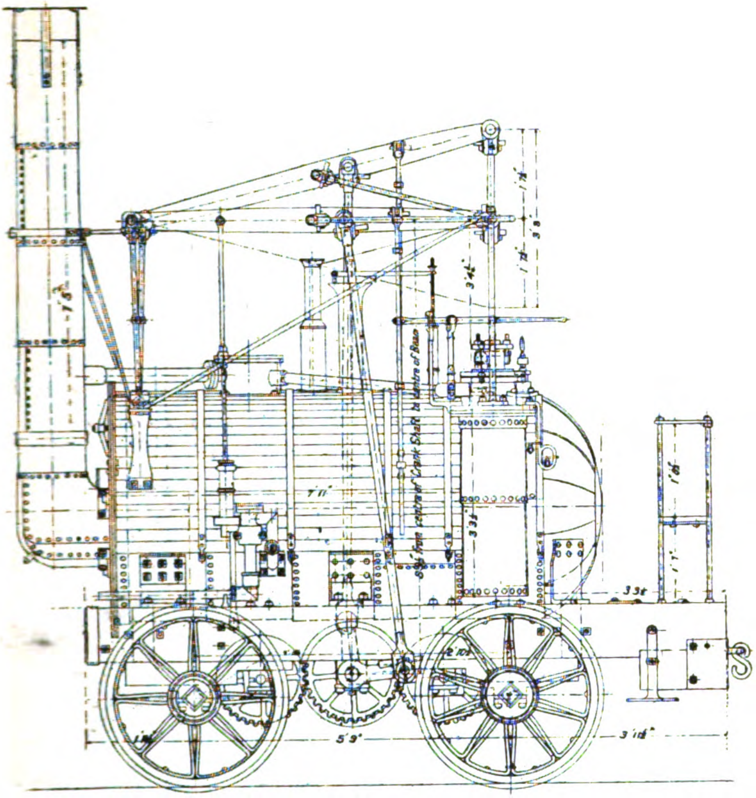

Side Elevation

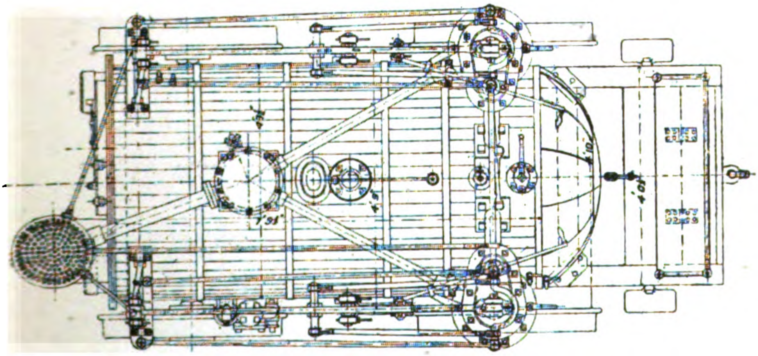

Plan

Fig. 5.—Hedley's Engine, "Puffing Billy," 1815.

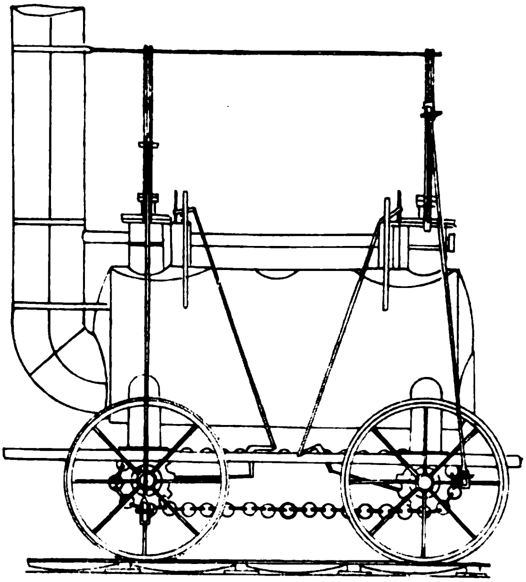

Fig. 6.—Stephenson's Locomotive, 1815.

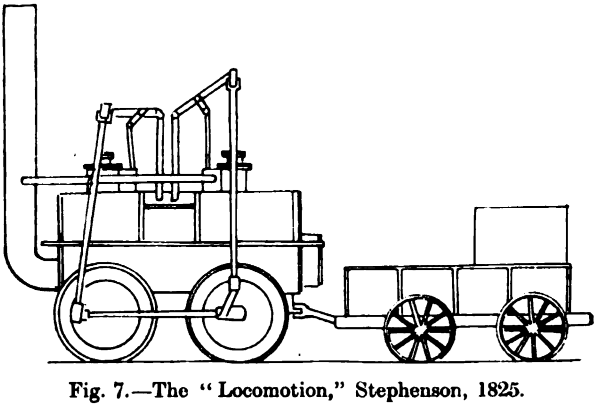

Fig. 7.—The "Locomotion," Stephenson, 1825.

Two others, viz. :—

The "Cyclopede," built by Brandrith, Liverpool;
The "Perseverance," built by Burstall, Edinburgh;

also entered, but were disqualified as they did not conform to the conditions of the competition.

The "Rocket" (fig. 10) was a four-wheeled engine, with inclined cylinders of 8 ins. diameter, and 16½ ins. stroke, and a boiler 3 ft. 4 ins. in diameter and 6 ft. in length. This was the first locomotive made in England with a multitubular boiler. There were 25 tubes each 3 ins in diameter. The diameter of the driving-wheels was 4 ft. 8½ ins.; the pressure of steam in the boiler 50 lbs. per square inch; and the total heating surface 137·75 sq. ft.

	Tons.	Cwts.	Qrs.	Lbs.
Weight of engine in working order, . .	4	5	0	0
,, tender ,, ,, . .	3	4	0	2
,, carriages loaded, . . .	9	10	3	26
Total weight of train, . . .	17	0	0	0

The "Sanspareil" (fig. 11) was a four-wheeled coupled engine, with vertical cylinders of 7 ins. diameter and 18 ins. stroke; boiler 4 ft. 2 ins. in diameter and 6 ft. long; driving-wheels 4 ft. 6 ins. in diameter; and total heating surface 90·3 sq. ft.

	Tons.	Cwts.	Qrs.	Lbs.
Weight of engine in working order, . .	4	15	2	0
,, tender ,, ,, . .	3	6	3	0
,, carriages loaded, . . .	10	19	3	0
Total weight of train, . . .	19	2	0	0

The "Novelty" (fig. 12) was a tank engine on four wheels. The cylinders were 6 ins. in diameter, and 12 ins. stroke; the boiler was rather complicated—partly vertical, partly horizontal; the diameter of the driving-wheels was 4 ft. 2 ins.; and the total heating surface was 42·5 sq. ft.

	Tons.	Cwts.	Qrs.	Lbs.
Weight of engine in working order, . .	3	1	0	0
,, tank loaded, ...	0	16	0	14
,, carriages loaded, . . .	6	17	0	0
Total weight of train, . . .	10	14	0	14

The trials were made over a distance of 1½ miles, with an additional ⅛ mile at each end for getting up speed. It was arranged that each engine should run twenty times each way, equivalent to a journey from Liverpool to Manchester and back.

The "Rocket" was the first engine tried, and the only one that accomplished the stipulated distance of 70 miles. This engine satisfactorily performed all the tests required by the judges, and the prize was awarded to Messrs. Stephenson. The average speed was 13¾ miles an hour, 29 miles an hour being the maximum speed attained.

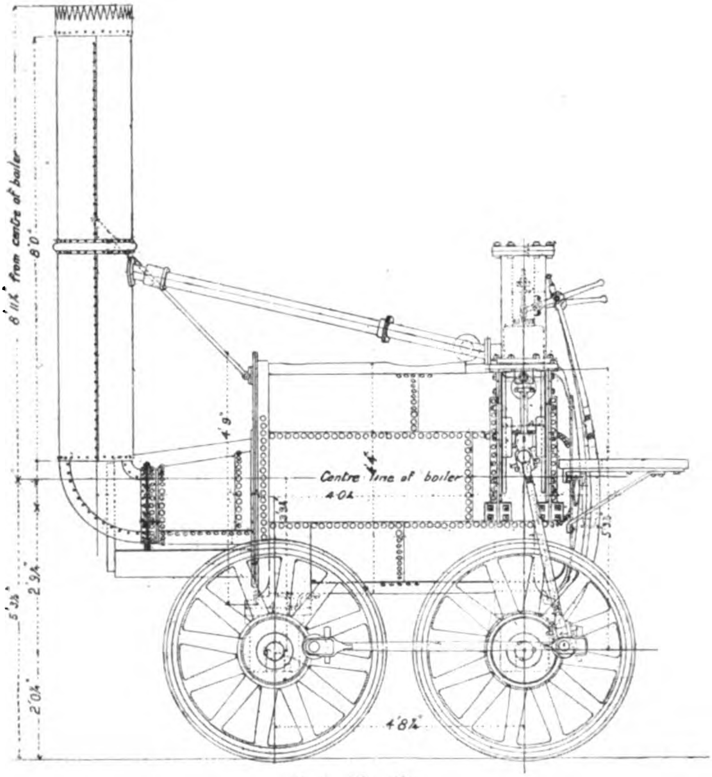

Side Elevation

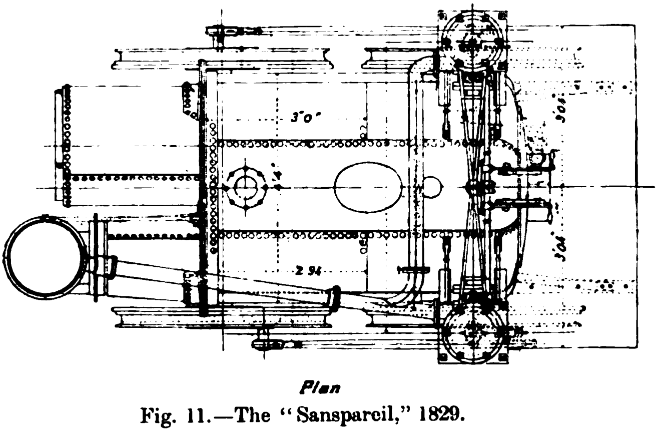

Plan

Fig. 11.—The "Sanspareil," 1829.

The "Sanspareil" ran a distance of 27½ miles at an average speed of 14 miles an hour, realising a maximum speed of 22½ miles an hour. Owing to the cracking of one of the cylinders, and the failure of the pumps supplying the feed-water, this engine had to stop at the distance above mentioned.

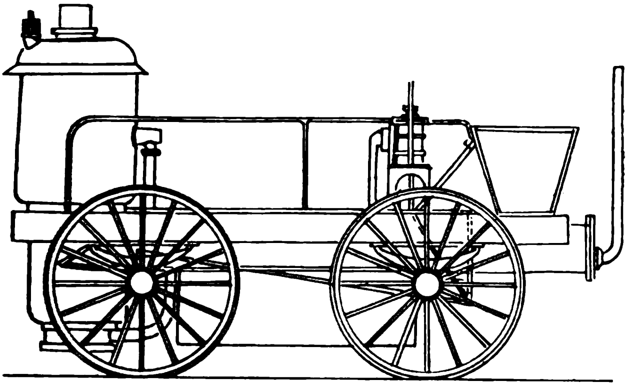

Fig. 12.—The "Novelty," 1829.

The "Novelty," after making two runs in each direction, had to retire from the competition owing to some joints on the boiler giving way. The average speed of this engine was 14¾ miles an hour.

The result of this trial was to show conclusively the superiority of the locomotive over both fixed engines and horses on railways.

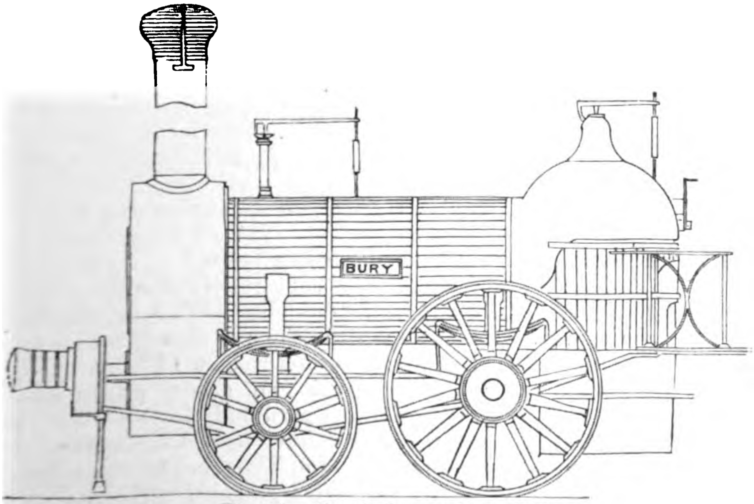

Fig. 13.—Bury's Locomotive, 1830.

Inside and Outside Cylinder Engines.—In 1830 Hackworth designed a locomotive, the "Globe," built by Messrs. Stephenson, for the Stockton and Darlington Railway, which comprised many improvements. The cylinders were placed horizontally inside the frame, and worked on a crank-axle. The wheels, 5 ft. in diameter, were four in number and coupled. This engine is said to have attained a speed of 50 miles an hour.

During the same year Bury of Liverpool introduced his well-known four-wheeled engine (fig. 13), in which he employed trussed or bar frames, the standard form of engine frame at the present day in America.

Stephenson also built an engine, the "Planet" (fig. 14), in the same year, for the Liverpool and Manchester Railway, which was furnished with inside horizontal cylinders, multitubular boiler, blast pipe, and double crank-axle. This engine had cylinders 11 ins. in diameter, with 16 ins. stroke; and a boiler 3 ft. in diameter and 6 ft. 6 ins. long, with 129 tubes 1$\frac{5}{8}$ ins. in diameter; the heating surface being 37 sq. ft. in the fire-box, and 370 sq. ft. in the tubes. The weight of the engine, with coke and water, was 9 tons, and of the tender, loaded, 4 tons; the total weight, 13 tons.

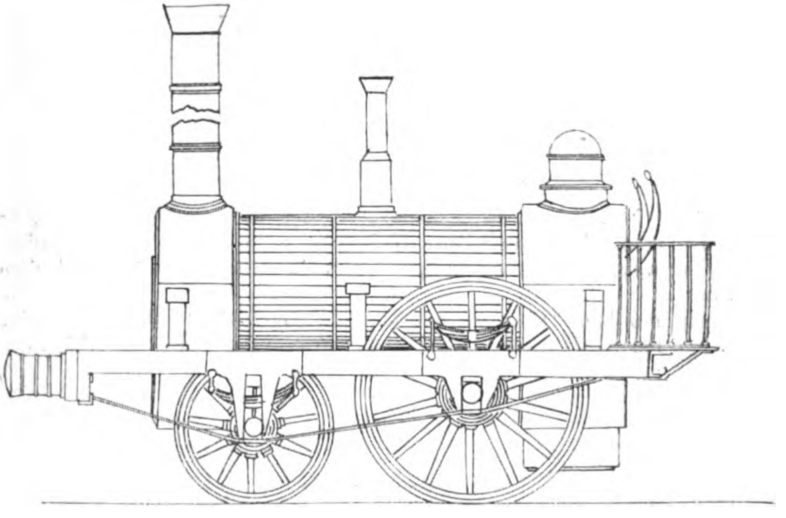

Fig. 14.—The "Planet," 1830.

In 1831 Messrs. Stephenson built two goods engines, the "Samson" and "Goliath," for the Liverpool and Manchester Railway. The former of these is stated to have hauled a train of 164 tons, exclusive of engine and tender, from Liverpool to Manchester in two and a half hours, the maximum speed being 20 miles an hour.

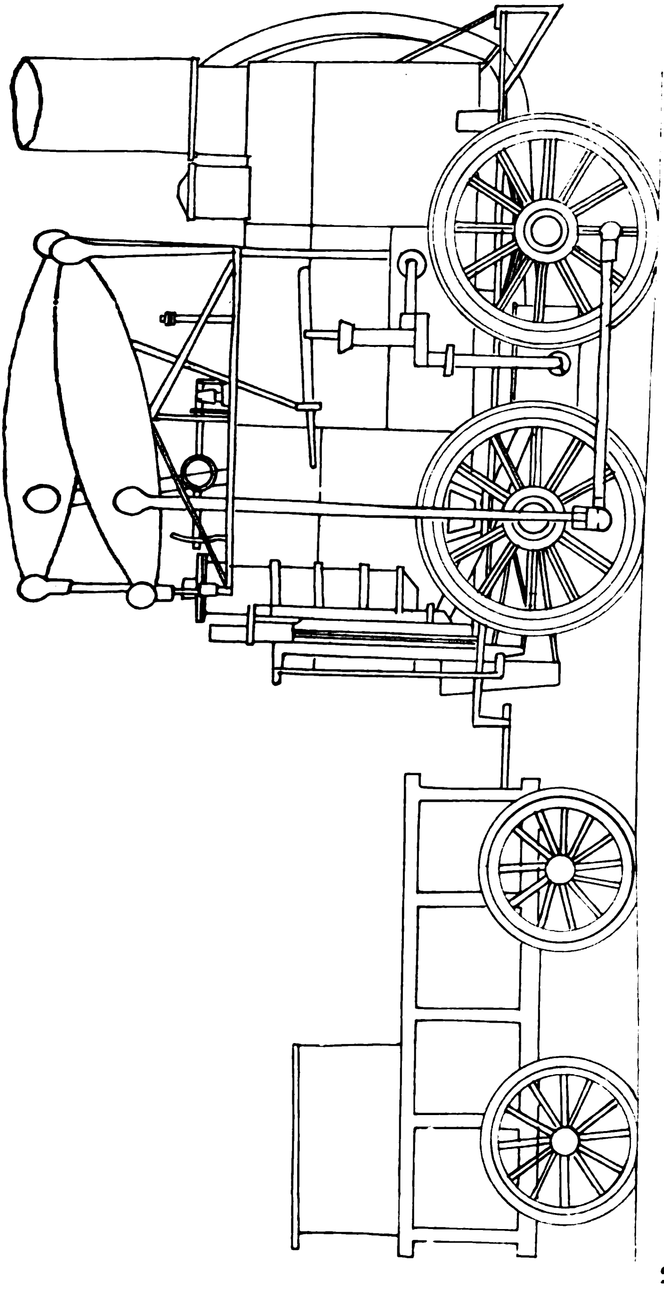

Fig. 17.—The "Stourbridge Lion," 1829.

Among the earliest of the American locomotives, of which there is any authentic record, was the "Old Ironsides" (fig. 18) by W. Baldwin, one of the greatest locomotive engine builders of the world. This engine made its trial trip in November, 1832, on the Philadelphia, Germantown, and Noristown Railroad, and ran on this road for more than twenty years. It was a four-wheeled engine modelled after the English style and weighed in running order a little over 5 tons. The wheels were 4 ft. 6 ins. in diameter; the cylinders were 9½ ins. in diameter and of 18-ins. stroke, and were attached horizontally to the outside of the smoke-box; the boiler was 30 ins. in diameter, and had seventy-two copper tubes each 1½ ins. in diameter. From that time up to the present locomotive building has flourished in Philadelphia.

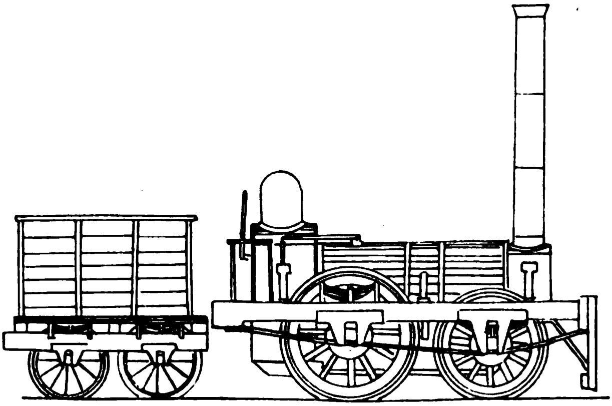

Fig. 18.—The "Old Ironsides," 1832.

In 1837, Brooks of Philadelphia constructed a locomotive for H. R. Campbell of the same city with eight wheels. This had four coupled wheels, and the fore part of the engine rested on a four-wheeled bogie or truck in front. This was the first engine of this type, and from it the standard American locomotive of the present day takes its origin. The cylinders were 12 ins. in diameter with 18-ins. stroke; and the coupled wheels were 3 ft. 8 ins. in diameter. The total weight of the engine was about 12 tons.

The London and Birmingham Railway was opened in 1837, Edward Bury being appointed locomotive superintendent. The locomotives designed by him were composed exclusively of four-wheeled engines; and from the opening until 1845 there was but one six-wheeled engine employed. The passenger engines had cylinders 12 ins. in diameter with 18-ins. stroke, and single driving-wheels 5 ft. 6 ins. in diameter; they weighed about 9 tons. The goods engines had cylinders 13 ins. in diameter with 18-ins. stroke, and coupled wheels 4 ft. 6 ins. and 5 ft. in diameter.

may be traced the origin of the most approved forms of the outside-cylinder engine of the present day.

On the South-Western Railway, stocked originally with the older inside-cylinder engines, the first outside-cylinder engine, designed by J. H. Gooch, commenced to run in November, 1843. This engine was fitted with 6 ft. 6 ins. driving-wheels, and was the first example of an engine having driving-wheels exceeding 6 ft. in diameter on the 4 ft. 8½ ins. gauge. Gooch afterwards built for the same company some express engines with 7 ft. driving-wheels.

Reference has been made thus far only to engines designed to run on the ordinary 4 ft. 8½ ins. gauge; that, with the exception of a 4 ft. 6 ins. gauge used in a few Scotch railways, being the general width employed in this country.

Brunel, the engineer of the Great Western Railway, which was opened in 1838, decided to have a 7 ft. gauge. The first engine (fig. 20) made for this company—and named the "North Star"—was built by Messrs. Stephenson. It had six wheels and inside cylinders. The cylinders were 16 ins. in diameter, and of 18-ins. stroke; the diameter of the driving wheels was 7 ft., and of the carrying-wheels 4 ft. The tubes in the boiler were 9 ft. long, and the weight of the engine loaded was 18 tons. Messrs. Stephenson also constructed several other engines of similar design for the same company.

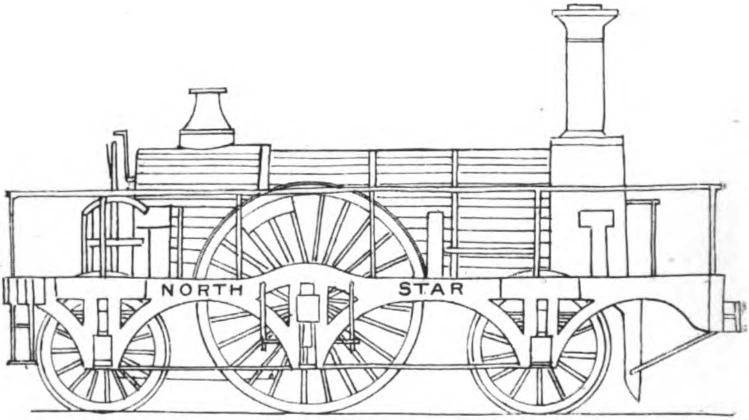

Fig. 20.—The "North Star," broad gauge, 1838.

One engine, named the "Hurricane," was built for the Great Western Railway with driving-wheels of 10 ft. diameter, but it was not a success.

In 1846, the powerful engines (fig. 21) known as the "Great Britain" class were designed by Brunel and Gooch. These had inside cylinders and eight wheels. The cylinders were 18 ins.

Three engines were built at Crewe Works in 1847, to the designs of Allan, the superintendent, by order of the Directors of the London and North-Western Railway. This type, illustrated in fig. 22, was named the "Velocipede." The cylinders were of 15 ins. diameter and 20-ins. stroke; and the diameter of the driving-wheels was 7 ft.

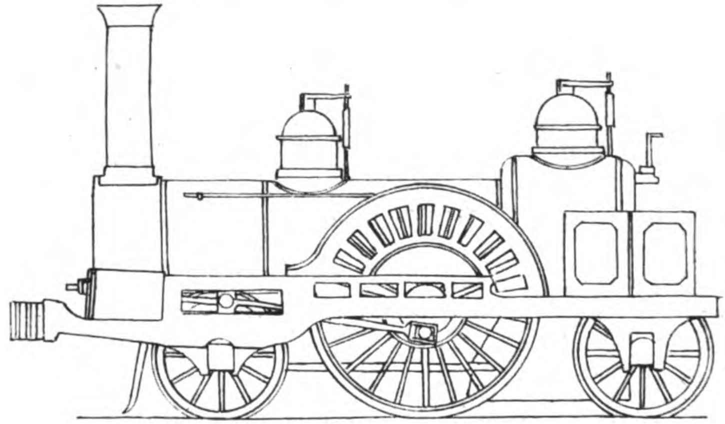

Fig. 22.—The "Velocipede," Allan, 1847.

The "Cornwall" (fig. 23), designed by F. Trevethick, mechanical superintendent of the Northern division, having cylinders 17½ ins. in diameter, with 24 ins. stroke, and driving-wheels with a diameter of 8 ft. 6 ins., deserves mention as having the largest size of driving-

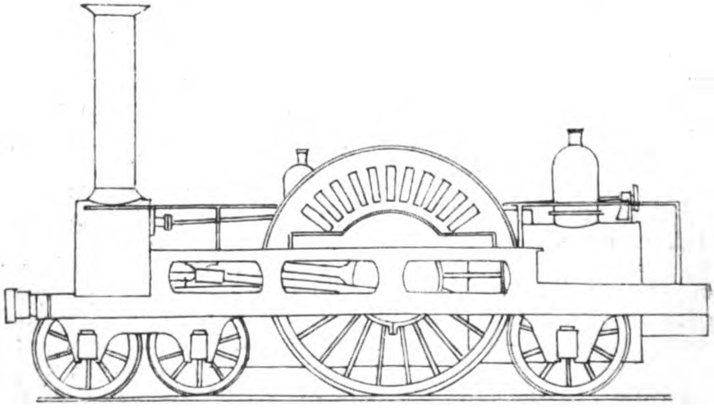

Fig. 23.—The "Cornwall," Trevethick, 1847.

wheel that has ever been tried on the ordinary 4 ft. 8½ ins. gauge. The boiler of this engine was placed under the driving-axle in the original design, but when a new boiler was built in 1862 by Ramsbottom it was placed above the axle, as shown in fig. 24. This engine is still working between Manchester and Liverpool.

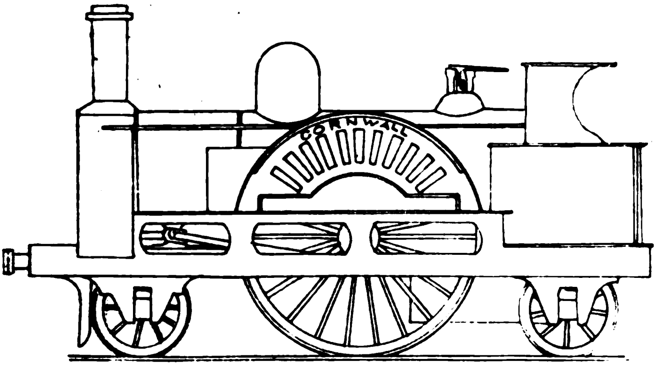

Fig. 24.—The "Cornwall" as reconstructed by Ramsbottom, 1862.

The "Courier," another leading engine, designed by Crampton, was very similar to other engines of his design, having a pair of 7-ft. wheels placed behind the fire-box.

It may be useful to state some particulars of Crampton's engine, the "Liverpool" (fig. 25), built in 1848 by Messrs. Bury, Curtis, & Kennedy for the London and North-Western Railway Co. The

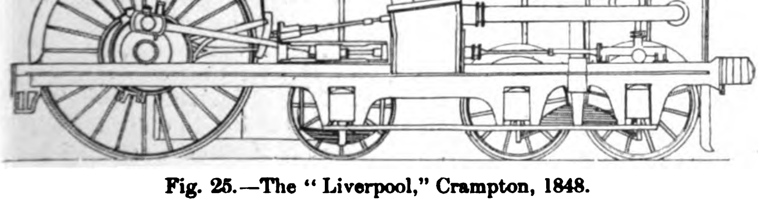

Fig. 25.—The "Liverpool," Crampton, 1848.

cylinders of this engine were 18 ins. in diameter, and of 24-ins. stroke; the boiler had 300 tubes, $2\frac{3}{16}$ ins. in diameter outside, with a length of 12 ft. 6 ins.; the diameter of the driving-wheels was 8 ft., and of the carrying wheels 4 ft.; the total heating surface was 2290 sq. ft., and the grate area 21½ sq. ft.; the weight of the engine, loaded, was 35 tons, and the weight of the tender 21 tons—the total weight of engine and tender was 56 tons. This engine was said to have hauled 180 tons at 50 miles an hour, and to have taken 40 carriages to time between London and Wolverton. It was, without doubt, the most powerful engine of its time. The permanent way, however, could not withstand the excessive weight, and on this ground it had to be taken from service.

McConnell, when he became locomotive superintendent of the southern division of the London and North-Western Railway, designed and built in 1850 a number of engines of the "Bloomer" class (fig. 26). In these engines the cylinders were 16 ins. in diameter and 22-ins. stroke; there were 195 tubes 12 ft. long; the diameter of the driving-wheels was 7 feet; and the weight of the engine was 29 tons. Locomotive engineers had up to this time tried to keep a low centre of gravity and a large driving-wheel. McConnell did not agree with this, and saw no objection to a high boiler. In the "Bloomer" class of engines he carried his views into effect, this class of engine being built with the boiler above axles. The height of the centre of the boiler from the rails in locomotives of the present day has proved that he was correct.

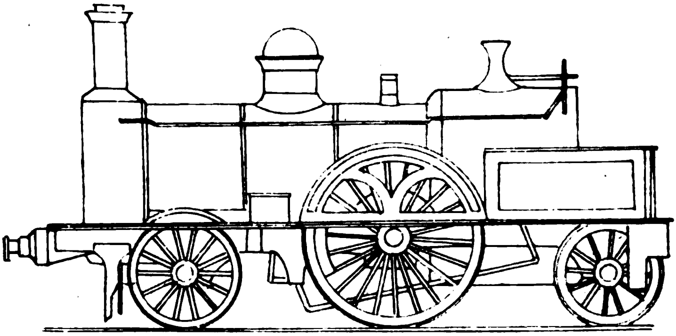

Fig. 26.—The "Bloomer," McConnell, 1850.

For the Bristol and Exeter Railway, in 1853, Pearson, the locomotive superintendent, designed, and Messrs. Rothwell & Co. of Bolton built, some tank engines (fig. 27), with driving-wheels 9 ft. in diameter. In these the cylinders were 16½ ins. in diameter with 24-ins. stroke; the boiler had 180 tubes $1\frac{15}{16}$ ins. in diameter with a length of 10 ft. 9 ins.; and the weight of the engine was 42 tons. These engines are said to have run at the rate of 80 miles an hour.

The driving-wheels of these engines were afterwards reduced to a diameter of 8 ft., and some of them, as altered, were still running until May, 1892.

capable not only of propelling itself on a smooth rail, but also of hauling a train of loaded vehicles. And the limitation imposed by the use of the smooth rail has been a controlling consideration in the design of locomotives throughout their subsequent development. Whatever the capacity of the engine cylinders, the limit of hauling power is reached when the driving-wheels begin to slip on the rails. In response to the constant demands for higher speeds and for engines capable of hauling heavier loads, locomotive engineers have generally adopted two methods of raising this limit. One consists in designing the locomotive so that a sufficient share of the total weight shall be supported on the driving axle to give the desired amount of frictional adhesion between the wheels and the rails. The other consists in employing the adhesion of more than one pair of wheels by coupling them—that is, connecting them mechanically—so that when one pair revolves the other pair must revolve also. Both these methods are largely in favour at the present time. Another method of recent introduction is to drive separately each of two driving-axles.

Although consideration of adhesion alone would lead to the locomotive being carried mainly or altogether on the driving wheels only, the road or permanent way is found to suffer if the weight concentrated on any one pair of wheels exceeds a certain amount. The great weight of powerful modern locomotives and the durability of the permanent way are rendered compatible only by distributing a portion of the weight over supporting or running wheels additional to the driving wheels. These are distinguished as *leading* or *trailing*, according to whether they are towards the front or rear of the engine. As soon, however, as more than four adjacent wheels are employed, the further problem of making provision for enabling the locomotive to run round curves presents itself. To a very slight extent the play between the wheel-flanges and the rail suffices; or the removal of flanges from certain of the wheels. But when the distance between the leading and trailing wheels is considerable, or the curves sharp, the wheel-axles must be capable of certain adjustments whenever the locomotive enters on a curved portion of the track. An absolutely perfect adjustment, as can be seen from obvious geometrical considerations, would comprise (1) a shifting of the axles so that all should point towards the centre of the curve which is being traversed; (2) a lateral shifting of, at least, all but the two middle axles. The figure enclosed by joining the points of contact between the wheels and the rails is called the **wheel-base**; and one in which there is adequate provision for the practically sufficient shifting of the axles, is known as a **flexible** wheel-base. When there is little or no provision for this adjustment, the wheel-base is said to be *rigid* or *fixed*.

Flexibility of the wheel-base is attainable either—(1) By making certain of the axle-journals longer than the axle-boxes so as to permit the axle to have lateral play relatively to the engine framing;

influence on the steady running of the engine. Another objection to the use of outside-cylinders is the cooling effect due to their exposed position. It has been stated that the condensation in such cylinders when rushing through the air is, on the average, about 16 per cent. more than in the case of inside-cylinders.

The greatest objections to the inside-cylinder are the use of the crank-axle which they necessitate, and the difficulty in arranging the large cylinders now necessary in the limited space between the frames. The larger cylinders further require larger bearings and crank-webs for which, also, space must be found. These difficulties have been overcome to some extent by putting the valves either above or below the cylinders, and strengthening the crank-axles by hooping, or by modifying the form of the crank-webs.

Outside-cylinders, on the other hand, have the advantage that they not only dispense with the crank-axle, but also allow more space for the introduction of large cylinders. The mechanism and motion are also made more accessible and convenient for attention. Locomotives with outside-cylinders are largely used on the London and South-Western, Great Northern, London and North-Western, North London, Caledonian, Highland, and Great North of Scotland Railways.

In the United States of America no locomotive engines are fitted with inside-cylinders; nothing but the outside-cylinder is used. In many compound locomotives and in certain simple locomotives of the most recent construction cylinders are disposed both inside and outside the frames.

LONDON AND SOUTH-WESTERN RAILWAY.

A. Express Passenger Engines.—Owing to the enormous increase in traffic, in the weight and size of modern carriages, the increased weight of trains, and the demand for quicker transit, the older types of South-Western engines became useless. The new outside-cylinder express engines were designed by Mr. W. Adams to replace them, and are among the most powerful and economical engines in the world. These engines are illustrated in Plate I. They have four wheels coupled, with a leading bogie, and work the heavy main line express trains running from Waterloo to Bournemouth. The 12.30 p.m. running to Southampton travels a distance of 79¼ miles without a stop at the rate of 47½ miles per hour; the 2.15 p.m. to Christchurch runs 104 miles without a stop at 46 miles per hour; the up train from Bournemouth travels from Southampton to Vauxhall, 78 miles, at 50 miles per hour; and the 11.0 a.m. from Waterloo to Exeter and Plymouth runs to Salisbury, 83½ miles, without a stop at 43½ miles per hour. These engines frequently do these runs with nineteen vehicles, four of them being bogie carriages weighing 20 tons each; the total load—including engine and tender—being about 310 tons.

The four coupled driving-wheels are 7 ft. 1 in. in diameter, and

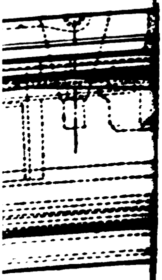

In addition to the above, a bogie express engine, with fou cylinders, has lately commenced working on this railway. Th designer is Mr. D. Drummond, the present locomotive engineer t the Company.

The four cylinders are each of 15 ins. diameter and 26-ins. stroke Two of the cylinders are inside and mounted directly under th smoke-box. These drive the forward pair of driving-wheels. Th other two cylinders are outside and drive the trailing pair o drivers. The valves of the inside-cylinders are worked by Stephenson's link-motion, and those of the outside-cylinders, by Joy's gear. The diameter of the driving-wheels is 6 ft. 7 ins.; there are no coupling-rods. The distance between the two driving-axles is 11 ft., which permits of the employment of a very long fire-box. The grate-area is 27·4 sq. ft.

A new departure is made in respect to the firebox by the introduction of water-tubes in addition to the usual fire-tubes. These water-tubes are disposed transversely, with a slight inclination, at the top of the firebox. The total heating surface is 1701 sq. ft., of which the firebox furnishes 394 sq. ft. The bogie has 3 ft. 6 in. wheels, with axles 6 ft. 6 ins. apart. The tender carries the large quantity of 4300 gallons of water.

	Tons.	Cwts.
Weights—Bogie, ...	16	17
Leading-driver, . . .	18	18
Trailing-driver, . . .	18	16
Total, . .	54	11

B. Mixed Traffic Engines.—Most of the fast goods trains on this line, and the excursion trains during the summer, are worked by the inside-cylinder mixed traffic engines. These engines have four wheels coupled, the coupled wheels, 6 ft. in diameter, being at the leading end. The trailing end is carried on a pair of wheels 4 ft. in diameter, with outside-bearings. Of the first thirty engines of this class built, the cylinders were in one casting and had the steam-chest underneath; but the advantages expected were not sufficiently realized. A large number built afterwards still had the cylinders in one casting, and of the same dimensions—viz., 18 ins. in diameter and 26-ins. stroke—but the valves were placed between the cylinders. In most other respects the same boiler and details were used. The boiler is 4 ft. 4 ins. outside diameter, and 11 ft. 4 ins. long between tube-plates. It is constructed of mild steel plates, the back, throat, and tube-plates being flanged in the hydraulic flanging press.

Cast steel has been very much used in the construction of these engines, the wheels, roof-bars, motion-plates, frame-stays, crossheads and horn-blocks being of this material.

C. Tank Engines.—For working the suburban traffic, which on this line is very heavy, two inside-cylinder tank engines have been designed, the larger one (fig. 29) running to Guildford, Windsor,

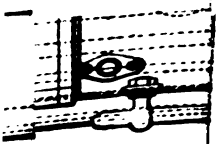

and the longer distances. Both these engines have four wheels coupled and a trailing bogie. The large bogie tank engine is interchangeable in all details—boiler, cylinders, motion, connecting- and coupling-rods—with the mixed traffic engine previously described, and in the same way the first twenty of these engines had cylinders designed with the steam-chest underneath, while the subsequent engines had the cylinders in one casting but the valves in between. The cylinders are 18 ins. in diameter and of 26-ins. stroke, and the driving-wheels are 5 ft. 7 ins. in diameter. The tractive force developed is 125·7 lbs. for every pound of mean effective pressure on the pistons. The boiler pressure is 160 lbs. per sq. in. The capacity of the water tanks is 1200 gallons and the fuel space 80 cub. ft.

The bogie is of the Adams type, which has a transverse sliding motion. It consists of a main steel casting to which the frames are rivetted; a steel casting which slides on top of this and the main frame-stay; also a steel casting with the large hollow pin or trunnion cast solid with it. The cross-slide is kept in position by two laminated controlling springs consisting of sixteen steel plates 2½ ins. wide and $\frac{3}{16}$ in. thick; these springs are provided with stops to prevent them from following the cross-slide.

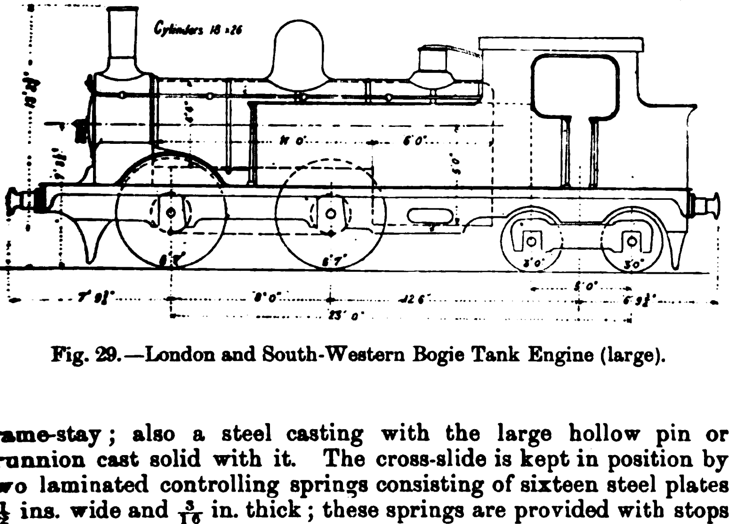

Fig. 29.—London and South-Western Bogie Tank Engine (large).

The smaller tank engine (Plate II.) has the leading and driving-coupled wheels 4 ft. 10 ins. in diameter, whilst the trailing end of the engine is carried on a four-wheeled bogie with wheels 3 ft. in diameter. The cylinders are 17½ ins. in diameter and have a 24-ins. stroke. The tractive force developed is 126·7 lbs. for every pound of mean effective pressure on the pistons. The cut-off varies from 77 per cent. in full gear to 28 per cent. under usual running conditions. The boiler pressure is 160 lbs. per sq. in. The boiler is constructed of mild steel plates with butt-joints, the top of the firebox casing being flush with the barrel.

CALEDONIAN RAILWAY.

Express Passenger Engines.—The four coupled inside-cylinder engines with leading bogie, known as the "Dunalastair" class, were designed by Mr. John F. M'Intosh to work the express trains between Carlisle and Aberdeen and Carlisle and Glasgow. Some of these are the heaviest regular trains in the country, frequently consisting of thirteen to fifteen vehicles weighing upwards of 200 tons exclusive of the engine and tender, and they are timed to run at 60·9 miles per hour.

The gradients on the Caledonian Railway are long and severe; the 10 miles from Beattock to the summit being 1 in 75 over the last 6 miles, and varying from 1 in 88 to 1 in 80 over the remainder.

The cylinders are 18¼ ins. in diameter and have a stroke of 26 ins., and the driving-wheels are 6 ft. 6 ins. in diameter. The length of the boiler barrel is 10 ft. 3¼ ins., and of the firebox 6 ft. 5 ins., and the mean outside diameter of the boiler is 4 ft. 2 ins. The total heating surface is 1403 sq. ft., in firebox 118·8 sq. ft., and in tubes 1284 sq. ft.

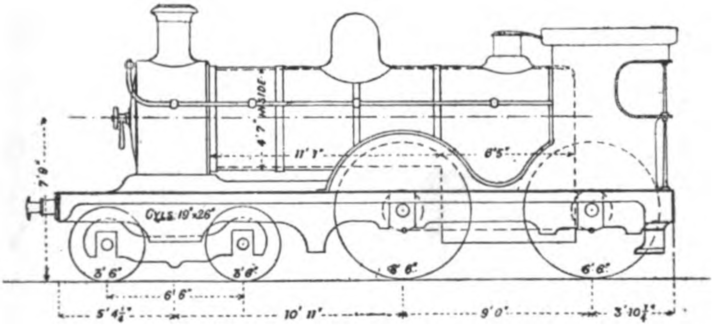

Fig. 30.—Caledonian Railway Express Engine.

The total weight of the engine is 46 tons 19 cwts. thus distributed:—

	Tons.	Cwts.
Bogie, ...	15	14
Driving-wheels, ...	16	0
Trailing-wheels, ...	15	5
	46	19

The "Dunalastair" began working in the early part of 1897. A somewhat larger engine of similar design, shown in fig. 30, has recently been completed. In this, the cylinders are 19 ins. in diameter, the cylinder stroke and the diameter of the driving-wheels remaining unaltered. The length of the firebox also remains the same, but the boiler is increased by 4⅝ ins. in diameter and 9½ ins. in length, this enlargement carrying with it a corresponding augoutside axle-boxes have $\frac{3}{4}$ in. play on each side, and there are no collars on the axle between the inside axle-boxes. The leading- and trailing-wheels are 4 ft. in diameter and interchangeable with the leading-wheels of the four wheels coupled express and mixed traffic engines.

The smoke-box front, and, where possible, all the tank plates are flanged, which results in a great saving in material and labour. The capacity of the tank is 1460 gallons.

The six wheels coupled tank engines of this railway are shown in fig. 33. These engines, in addition to being used for the large amount of local and suburban goods traffic, are also extensively used for the heavy suburban passenger traffic particularly on the Enfield and Walthamstow lines, where the heavy trains and number of passengers during the morning and evening is almost unparalleled on any other railway with a terminus in London.

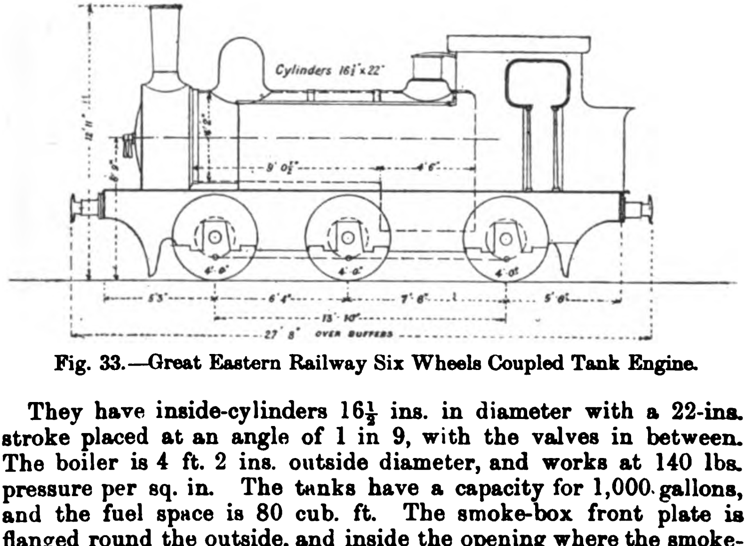

Fig. 33.—Great Eastern Railway Six Wheels Coupled Tank Engine.

They have inside-cylinders $16\frac{1}{2}$ ins. in diameter with a 22-ins. stroke placed at an angle of 1 in 9, with the valves in between. The boiler is 4 ft. 2 ins. outside diameter, and works at 140 lbs. pressure per sq. in. The tanks have a capacity for 1,000 gallons, and the fuel space is 80 cub. ft. The smoke-box front plate is flanged round the outside, and inside the opening where the smoke-box door fits, thus avoiding the use of angle-iron.

GREAT NORTHERN RAILWAY.

Express Passenger Engines.—Fig. 34 is an illustration of the outside-cylinder express engines with 8 ft. 1 in. single driving-wheels, designed by the late Mr. P. Stirling for this railway. These engines were constructed especially with a view to the attainment of high speeds. The cylinders are 18 ins. in diameter and have a stroke of 28 ins. The front end of the engine is carried on a bogie with wheels 3 ft. 11 ins. in diameter and axles 6 ft. 6 ins. apart.

The bogie pivot is not situated centrally, but is 6 ins. nearer to the trailing than to the leading axle. This disposition of the bogie allows the weight to come more gradually on the rails and so prepares the permanent way for the heavy load on the single-drivers. The trailing end of the engine is carried on a single pair of wheels 4 ft. 1 in. in diameter.

The barrel of the boiler is 4 ft. 1 in. in diameter and 11 ft. 5 ins. in length, and the firebox has a length of 6 ft. The total heating surface is 1165 sq. ft., of which 1043 sq. ft. is in the tubes and 122 sq. ft. in the firebox. The grate-area is 17·6 sq. ft. The total weight of the engine is 45¼ tons, distributed thus—

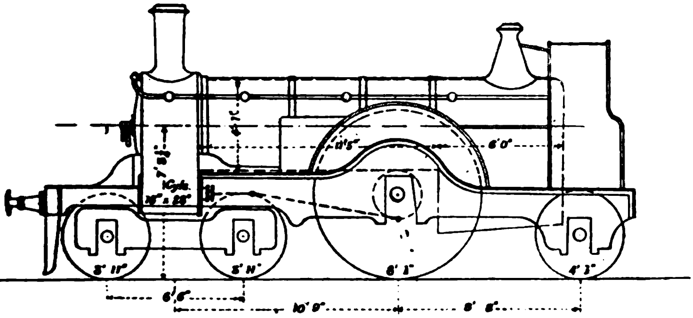

Fig. 34.—Great Northern Railway Express Engine.

		Tons.	Cwts.
Bogie,	Leading-wheels, ...	8	2
	Rear-wheels, ...	9	9
Driving-wheels, ...		17	0
Trailing- ,, ...		10	12
		45	3

GREAT SOUTHERN AND WESTERN RAILWAY OF IRELAND.

The following are particulars of the four wheels coupled express engines, radial tank engines for branch passenger work, and standard goods engines for this railway.

The cylinders—inside—of the express and goods engines are the same. They are 18 ins. in diameter and of 24-ins. stroke. The valve motion in these two classes is also the same.

There are only three sizes of cylinders in use on this line, viz.:—

18 ins. diameter and 24-ins. stroke for express and standard goods engines.
17 ,, ,, 22 ,, ,, for old express type.
16 ,, ,, 20 ,, ,, for small passenger type.

The driving-wheels for the express engines are 6 ft. 6 ins. in diameter. These engines have a leading bogie with wheels 3 ft. in diameter. The distance between the centre of the coupled wheels is 8 ft. 3 ins.

The goods engines have six wheels coupled, 5 ft. in diameter. The total wheel-base is 15 ft. 6 ins.

The boiler is 4 ft. in diameter, and the working pressure 150 lbs. per sq. in.

The tank engines have four wheels coupled of 5 ft. 6 ins. diameter, and the leading- and trailing-wheels are 3 ft. 9 ins. in diameter. The trailing-wheels have a radial axle-box. The tank capacity is 1250 gallons.

GREAT WESTERN RAILWAY.

Express Passenger Engines.—An example of the 7 ft. 8 ins. single driving-wheel inside-cylinder express engines on this railway is illustrated in fig. 35. These engines were designed by Mr. W. Dean for working the fastest express trains between Paddington and Newton Abbot. The cylinders are 19 ins. in diameter, and have a 24-ins. stroke, and the single-driving wheels are 7 ft. 8 ins. in diameter. The diameter of the wheels of the leading bogie is 4 ft., and that of the trailing-wheels 4 ft. 6 ins. The total heating surface is 1561 sq. ft., of which 1434 sq. ft. is tube surface, and 127 sq. ft. fire-box surface. The grate area is 20·8 sq. ft.

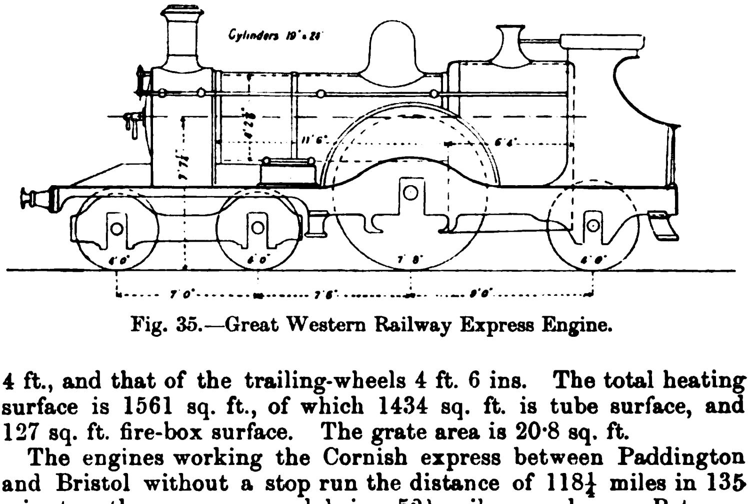

Fig. 35.—Great Western Railway Express Engine.

The engines working the Cornish express between Paddington and Bristol without a stop run the distance of 118¼ miles in 135 minutes, the average speed being 52½ miles per hour. Between Swindon and Bristol there are two banks having a gradient of 1 in 100. The total weight of these engines in working order is 49 tons, thus distributed :—

	Tons.
Bogie, ...	18
Driving-wheels, ...	18
Trailing- ,, ...	13
	49

In addition to the above—known as the "Achilles" class—a four-coupled engine, with leading bogie and 7 ft. driving-wheels,

B. Goods Engines.—These engines, shown in fig. 37, have six wheels coupled and a leading bogie, and are amongst the most powerful locomotives in Great Britain. Mention has been made of the difficulties due to the steep gradients and curves on this railway. Since, also, it is a single line trains cannot be divided and multiplied. This engine was designed to meet these difficulties and keep time between Perth and Inverness with forty-five loaded wagons, a pilot being used only from Blair Athole to the county boundary, 1485 ft. above sea level.

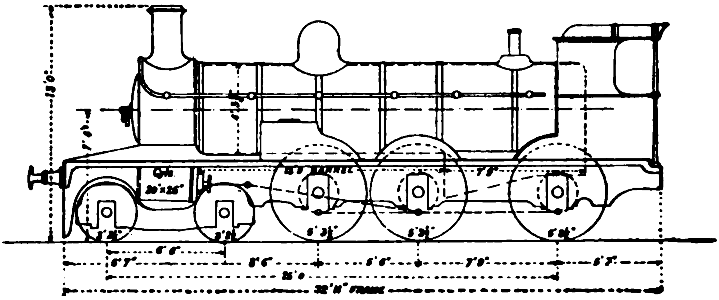

Fig. 37.—Highland Railway Six Wheels Coupled Bogie Goods Engine.

The long fire-box is obtained by the trailing end being disposed above the trailing-axle. The grate-area is 22·6 sq. ft., and the fire-box is 7 ft. 0½ in. long by 3 ft. 10⅛ ins. wide inside. The total heating surface is 1672 sq. ft. The cylinders are outside, 20 ins. in diameter, and have a 26-ins. stroke. The connecting-rod is 9 ft. 4 ins. long. The boiler is 4 ft. 7⅞ ins. outside diameter, and 14 ft. 1⅜ ins. between tube-plates. There is a compensating beam between the driving- and trailing-wheels. The driving-wheels are without flanges. The diameter of the six coupled wheels is 5 ft. 3½ ins.

LANCASHIRE AND YORKSHIRE RAILWAY.

A. Express Passenger Engines.—The inside-cylinder engines with four coupled wheels and leading bogie are illustrated in fig. 38. These engines designed by Mr. Aspinall were constructed to work the very heavy and fast traffic between Manchester and Southport, Blackpool, Liverpool, and Leeds. On the latter are some steep gradients—1 in 63 and 1 in 77. In certain trials made of a run from Manchester to Southport the average speed was 48·4 miles, taken with a Boyer speed recorder. These runs were made with the ordinary passenger trains.

The trains usually consist of ten large coaches, the weight being about 200 tons including engine and tender. These engines are fitted with Joy's valve-gear. The tender is fitted with water pick-up, the scoop being worked in and out the trough by Mr. Aspinall's patent vacuum arrangement.

The coupled driving- and trailing-wheels are 7 ft. 3 ins. in diameter, and the bogie wheels 3 ft. 0½ in. The cylinders are 1 ft. 6 ins. in diameter and have a 26-in. stroke. The load on the driving-axle is 16½ tons, and on the trailing-axle 14½ tons. The boiler is 11 ft. between tube-plates and 4 ft. 2 ins. in diameter. The working pressure is 160 lbs. per sq. in.

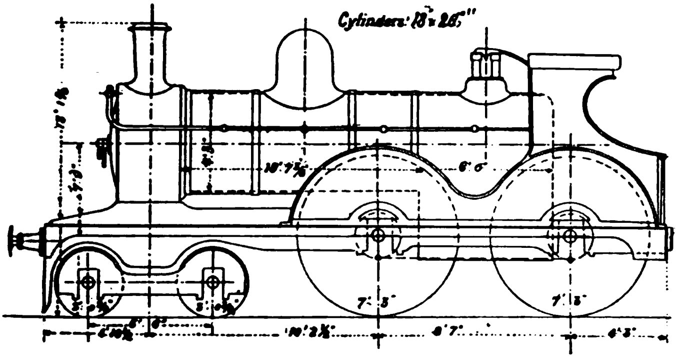

Fig. 38.—Lancashire and Yorkshire Express Engine.

B. Goods Engines.—The principal dimensions of the six wheels coupled inside-cylinder goods engine designed by Mr. Aspinall will also be found in Appendix B. The diameter of the driving-wheels is 5 ft. 1 in. The cylinders are 18 ins. in diameter with a 26-ins. stroke. The diameter of the boiler is 4 ft. 2 ins. outside and 10 ft. 9⅞ ins. between tube-plates. The total heating surface is 1216·4 sq. ft. There is a great deal of heavy goods traffic on this line and these engines give very good results. The tenders are duplicates of those used for the four wheels coupled express passenger engines.

C. Tank Engines.—These inside-cylinder tank engines, shown in fig. 39, have leading and trailing radial wheels 3 ft. 7¾ ins. in diameter. The coupled wheels are 5 ft. 8 ins. in diameter and are the same distance apart between centres as those of the express

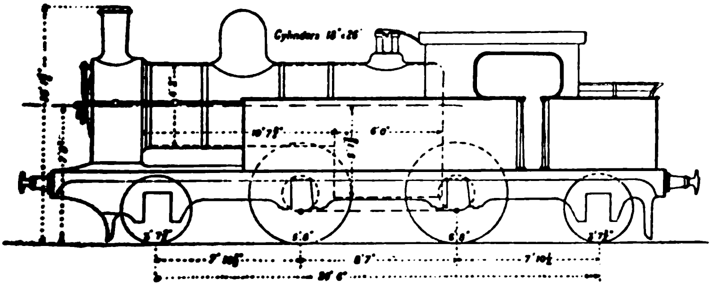

Fig. 39.—Lancashire and Yorkshire Radial Tank Engine.

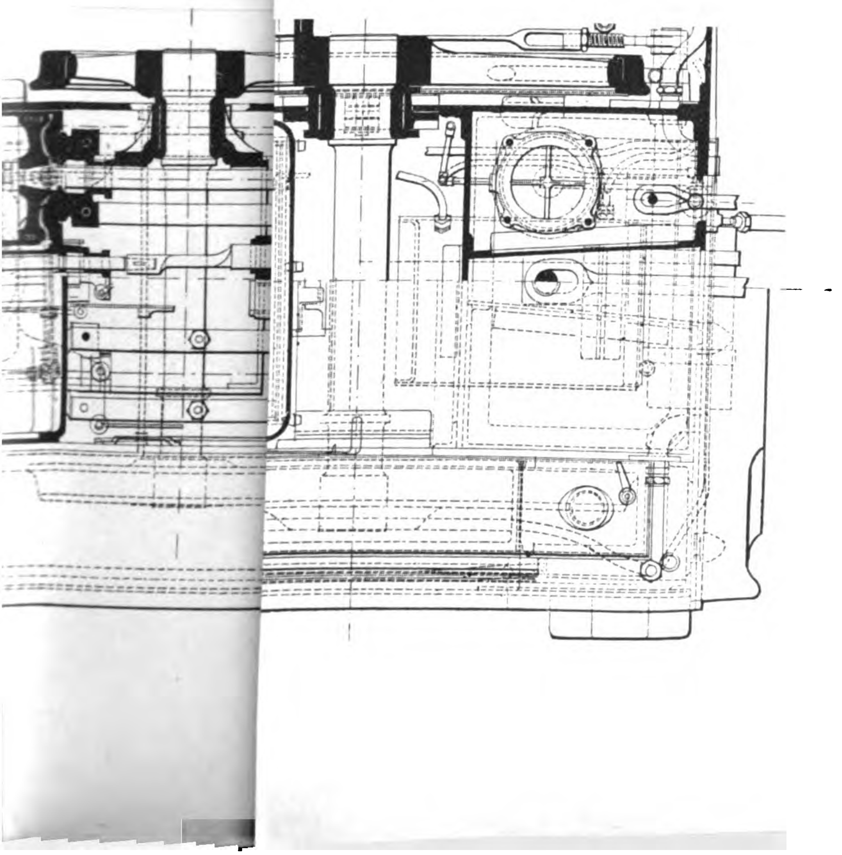

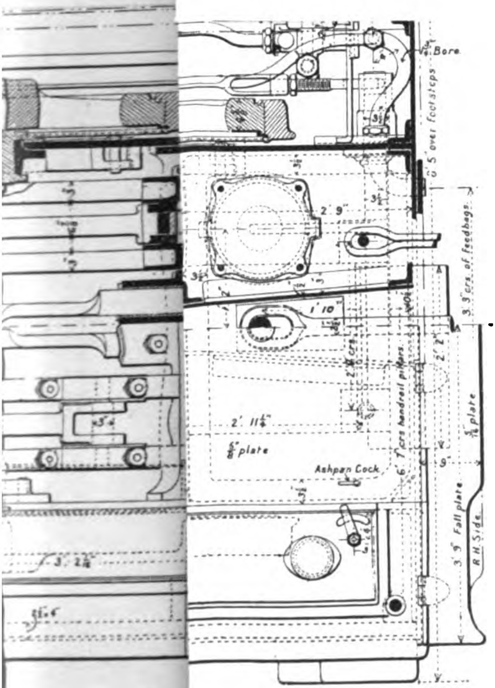
Bore
6' 5" over footsteps
3' 9" crs. of feedbags
2' 9"
1' 10"
2' 2"
6' 7" crs handrail pillars
2' 11¼"
⅝ plate
Ashpan Cock
½ plate
9"
3' 9" Fall plate
R.H. Side
3' 2¼"

TABLE I.—PASSENGER ENGINES ON LONDON AND NORTH-WESTERN RAILWAY.

Particulars.	7 ft. 6 in. "Lady of the Lake" Class.	6 ft. 6 in. Straight Link Engine.	6 ft. Straight Link Engine.	5 ft. 6 in. Side Tank Engine.	4 ft. 6 in. Side Tank Engine (Eight-wheeled).	4 ft. 6 in. Side Tank Engine (Eight-wheeled).
Cylinders—						
Diameter, ...	16 ins.	17 ins.	17 ins.	17 ins.	17 ins.	17 ins.
Stroke, ...	24 ins.	24 ins.	24 ins.	24 ins.	20 ins.	20 ins.
Diameter of driving-wheels, .	7 ft. 6 ins.	6 ft. 6 ins.	6 ft.	5 ft. 6 ins.	4 ft. 6 ins.	4 ft. 6 ins.
Wheel-base, ...	15 ft. 5 ins.	15 ft. 8 ins.	15 ft. 8 ins.	22 ft. 5 ins.	21 ft. 3 ins.	14 ft. 6 ins.
Heating surface—	Sq. ft.	Sq. ft.	Sq. ft.	Sq. ft.	Sq. ft.	Sq. ft.
Tubes, ...	981·4	980·0	980·0	980·0	886·8	886·8
Firebox, ...	87·3	103·5	103·5	94·6	84·8	84·8
	1068·7	1083·5	1083·5	1074·6	971·6	971·6
Grate-area, ...	15 ft.	17·1 ft.	17·1 ft.	17·1 ft.	14·2 ft.	14·2 ft.
	Tons. Cwts.	Tons. Cwts.	Tons. Cwts.	Tons. Cwts.	Tons. Cwts.	Tons. Cwts.
Weight in working order, .	29 6	32 15	33 4	50 10	45 18	38 4
Weight on driving-wheels, .	11 10 1 pair.	22 10 2 pairs coupled.	22 17 2 pairs coupled.	28 18 2 pairs coupled.	26 16 2 pairs coupled.	28 8 2 pairs coupled.

outside-cylinder engines of the "Lady of the Lake" class. Engines of this class, though, as mentioned in the previous chapter, it dates from 1862, are still, with light loads, the equal in point of speed of more modern competitors. Another type especially worthy of notice is the eight wheels coupled coal engine. The wheel-base being only 17 ft. 3 ins. is very short considering the number of wheels.

Mention should be made of a later type of simple engine with four cylinders, the "Iron Duke." This engine has four coupled wheels, with a leading bogie, and has two outside and two inside-cylinders, all driving on the same axle. In general design it is exactly similar to the four-cylinder compound engine briefly described in the next chapter.

The types of simple engines in use on the London and North-Western Railway are indicated in Tables I. and II.

TABLE II.—GOODS ENGINES ON LONDON AND NORTH-WESTERN RAILWAY.

Particulars.	5 ft. Six Wheels Coupled Special D. X. Class.	5 ft. Six Wheels Coupled 18 ins. Goods Class.	4 ft. 3 in. Six Wheels Coupled (Coal Train).	4 ft. 3 in. Six Wheels Coupled Coal Side Tank Engine.	4 ft. 3 ins. Eight Wheels Coupled (Coal Train).
Cylinders—					
Diameter,	17 ins.	18 ins.	17 ins.	17 ins.	19½ ins.
Stroke,	24 ins.	24 ins.	24 ins.	24 ins.	24 ins.
Diameter of driving-wheels,	5 ft.	5 ft.	4 ft. 3 ins.	4 ft. 3 ins.	4 ft. 3 ins.
Wheel-base,	15 ft. 6 ins.	15 ft. 6 ins.	15 ft. 6 ins.	21 ft. 3 ins.	17 ft. 3 ins.
Heating surface—	Sq. Ft.	Sq. Ft.	Sq. Ft.	Sq. Ft.	Sq. Ft. c.c. 39·1
Tubes,	980·0	980·0	980·0	980·0	1120·5
Firebox,	94·6	103·5	94·6	94·6	127
	1074·6	1083·5	1074·6	1074·6	1286·6
Grate-area,	17·1 ft.	17·1 ft.	17·1 ft.	17·1 ft.	...
Weight in working order,	Tons. Cwts. 31 0	Tons. Cwts. 35 4	Tons. Cwts. 29 11	Tons. Cwts. 43 0	Tons. Cwts. 49 3
Weight on driving wheels,	31 0 3 pairs coupled.	35 4 3 pairs coupled.	29 11 3 pairs coupled.	33 11 3 pairs coupled.	49 3 4 pairs coupled.

The steam reversing-gear invented some years ago by Mr. James Stirling is employed. This is arranged vertically on the side of the engine, and consists of a steam and water cylinder. It can be used slowly or quickly at will and takes up but little space.

B. **Goods Engines.**—The type of boiler without dome, and direct staying for the firebox roof, the internal steam-pipe, the regulator in smokebox, and the steam reversing-gear, are the same as described above. The boiler is 4 ft. 4 ins. in diameter, lap-jointed, and is 10 ft. $7\frac{1}{16}$ ins. between the tube-plates. The cylinders—inside—are 18 ins. in diameter, and have a 26-ins. stroke, with valves in between. The six coupled wheels are 5 ft. 2 ins. diameter. The total weight of the engine in working order is 36 tons 15 cwts.

C. **Tank Engines.**—These tank engines were designed for working the heavy suburban traffic on this line. The leading- and driving-wheels are 5 ft. 6 ins. in diameter, and are coupled. They are 7 ft. 5 ins. between centres. The bogie at the trailing end is similar to that used at the leading end of the four wheels coupled express engine. The bogie wheels have a diameter of 3 ft. $9\frac{1}{8}$ ins., and are 5 ft. 4 ins. between centres.

The boiler is 4 ft. 4 ins. diameter and 10 ft. $7\frac{1}{16}$ between the tube-plates. As regards the roof-stays for the firebox, the absence of a dome, the internal steam-pipe with regulator in the smoke-box, and steam reversing-gear, these engines are similar to the four wheels coupled express engines and six wheels coupled goods engines.

The cylinders—inside—are 18 ins. in diameter, and have a 26-ins. stroke; they are jointed at the centre, with the valves in between.

The capacity of the tanks is 1050 gallons, and there is sufficient space for 30 cwts. of fuel. The total weight of engine in working order is 48 tons 13 cwts. The fire-bars, as of the other engines of this line, are of wrought iron.

Mallet's Compound Locomotives.

In 1875 M. Mallet designed a two-cylinder compound locomotive, which was made at Creusot for the Bayonne and Biarritz Railway, and he has the credit of having first really introduced the compound locomotive. After experimenting for many years he showed, at the Paris Exhibition of 1878, a six wheels coupled tank engine, which was arranged to work either simple or compound by simply moving an ordinary slide-valve placed on the side of the smokebox. This valve was connected with both cylinders, and with the live and exhaust steam-pipes. When the valve was in one position, the steam from the high-pressure cylinder was conducted to the low-pressure cylinder, while the direct exhaust from the high-pressure cylinder, and the live steam supply to the low-pressure cylinder were cut off. The engine thus worked compound. In the other position the valve opened ports admitting live steam to the low-pressure cylinder, and also opened a direct exhaust from the high-pressure cylinder; at the same time it closed the communication between the two cylinders. With the valve in this position both cylinders thus worked with live steam and a free exhaust as in an ordinary engine. The reversing gear was arranged so that the cut-off in the high-pressure and low-pressure cylinders were each independent of the other. M. Mallet also designed a four-cylinder compound locomotive, with one high-pressure and one low-pressure cylinder, placed tandem, on each side of the engine, each pair controlled by one valve-motion. In this engine there was an equilibrium stop-valve to act both as regulator and starting valve. A triple-expansion high-speed locomotive, having one cylinder 18 ins. and three cylinders 26 ins. in diameter, was also designed by M. Mallet.

This system is non-automatic; that is to say, the change from simple to compound working, and *vice versâ*, is entirely under the control of the driver.

Von Borries' System.

In 1880 Herr A. von Borries, then engineer of the Prussian Railway at Hanover, encouraged by the economical results of Mallet's engines, had two compound locomotives built to his designs. In the same year he improved upon these engines by connecting the two valve-motions to one reversing-shaft, and by using live steam in the low-pressure cylinder only for starting, the proper proportions of cut-off in the two cylinders being maintained by the reversing gear itself. This relieved the driver from all responsibility as to the work done by each cylinder.

In 1884 he introduced his well-known intercepting valve, shown in fig. 45, which, when closed by the driver, separates the low-pressure cylinder from the receiver, and opens a small communication with the main steam-pipe. When the regulator is then opened, the wire-drawn steam which starts the low-pressure piston cannot enter the which the high-pressure cylinder exhausts into the recei A lever is fixed in the cab by which at starting the driver adm steam at the back of the piston and closes the intercepting val thus opening the exhaust from the high-pressure cylinder to t atmosphere for as long a period as may be desirable.

LONDON AND NORTH-WESTERN RAILWAY.

Webb's System.

In 1878 Mr. Webb of the London and North-Western Railwa converted one of Trevethick's old outside-cylinder passenger engine into a compound engine. This engine had 15-in. cylinders and 6-f driving-wheels, and the conversion was effected by reducing th diameter of one of the cylinders to 9 ins., the other being retaine as a low-pressure cylinder. The engine was fitted with a startin valve similar to Mallet's.

This engine ran for some time on a branch line, giving very good results.

In 1881 he designed and built the first of his three-cylinder compound locomotives—the "Experiment"—having two outside high-pressure cylinders and one inside low-pressure cylinder. The primary objects were to attain economy in fuel, and to do away with the coupling of the wheels, while yet utilising the adhesion of two pairs.

A large number of engines on this system have been built.

Compound Express Passenger Engines.—Another design of Mr. Webb's—the "Dreadnought" class—has two outside high-pressure cylinders 14 ins. in diameter and of 24-ins. stroke, and one inside low-pressure cylinder 30 ins. in diameter and of 24-ins. stroke. Each engine is fitted with Joy's valve gear. The high-pressure cylinders in these engines are attached to the outside frame-plates about midway between the front tube-plate and the middle pair of wheels, and drive the trailing-wheels. The low-pressure cylinder is placed between the frames beneath the smokebox, and is connected to the single-throw crank-axle of the middle pair of wheels. Boiler steam is conveyed directly to the high-pressure cylinders, and the exhaust from these is taken through pipes round the smokebox to the low-pressure steam-chest. The exhaust steam from the low-pressure cylinder is delivered into the blast-pipe and thence to the chimney in the usual way.

By a valve fitted to the pipe forming the receiver in the smokebox, and opening directly into the blast-pipe, the driver is enabled at starting to turn the exhaust steam from the high-pressure cylinders directly into the chimney, and, by a valve placed on the side of the smokebox, to admit a small amount of live steam from the boiler into the receiver and thence to low-pressure cylinder.

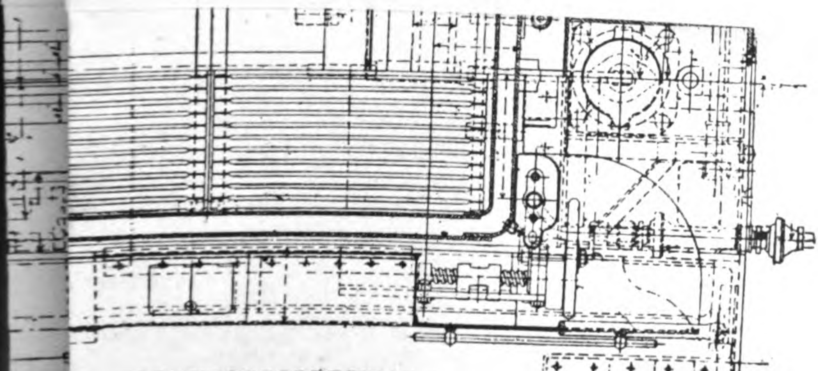

INDEX TO PLATE V.

Three-Cylinder Compound Express Engine.

A	Intermediate combustion chamber.
A^1	Steam nozzles in combustion chamber.
A^2	Water tubes in combustion chamber.
A^3	Ash hopper and discharging valve.
B	High-pressure outside-cylinder driving through connecting-rod B^1 the trailing driving-axle B^2.
B^3	Link-motion working valves of high-pressure cylinder through rod B^4 and rocking shaft B^5.
B^6	Steam supply-pipe to high-pressure cylinder.
C	Low-pressure inside-cylinder driving leading driving-axle C^1.
C^2	Loose eccentric working valve of low-pressure cylinder through rocking shaft C^3.
C^4	Exhaust-pipe from high-pressure cylinder forming receiver and supply-pipe for low-pressure cylinder.
C^5	Exhaust and blast-pipe from low-pressure cylinder.
D	Intercepting or starting valve for permitting exhaust from high-pressure cylinders to be discharged into blast-pipe.
E	Radial axle-box supporting leading end of engine.

Mr. Webb's latest design of compound engine—the "Black Prince"—departs from those above described in several important respects. In this there are four cylinders, each of 24-ins. stroke; two outside high-pressure cylinders of 15 ins. diameter, and two inside low-pressure cylinders of 19½ ins. diameter. These are all situated abreast below the smokebox and all drive on one axle. There are two coupled pairs of wheels of 7 ft. 1 in. diameter. The leading end is supported on a four-wheeled double radial truck or bogie with wheels 3 ft. 9 ins. diameter, and 1 in. side play. The cranks on which the high- and low-pressure cylinders on each side of the engine drive are directly opposite to each other; and the valves of the inside low-pressure cylinders are worked through simple levers at the front end from those of the outside high-pressure cylinders. The valves of the latter are worked by Joy's gear.

The cranked driving-axle has a central bearing 7 ins. in diameter and 5½ ins. long, in addition to the ordinary end bearings, which are 7 ins. in diameter and 9 ins. long.

In order to obtain a uniform distribution of the draught over the tubes, the smokebox is divided by a horizontal partition into two compartments, each provided with a separate chimney and blast-pipe.

The tube heating surface is 1241 sq. ft., the firebox heating surface 159 sq. ft., and the grate area 20·5 sq. ft.

	Tons.	Cwts.
Weights—Radial truck or bogie, ...	19	16
Driving-wheels, ...	17	18
Trailing-wheels, ...	16	14
Total, ...	54	8

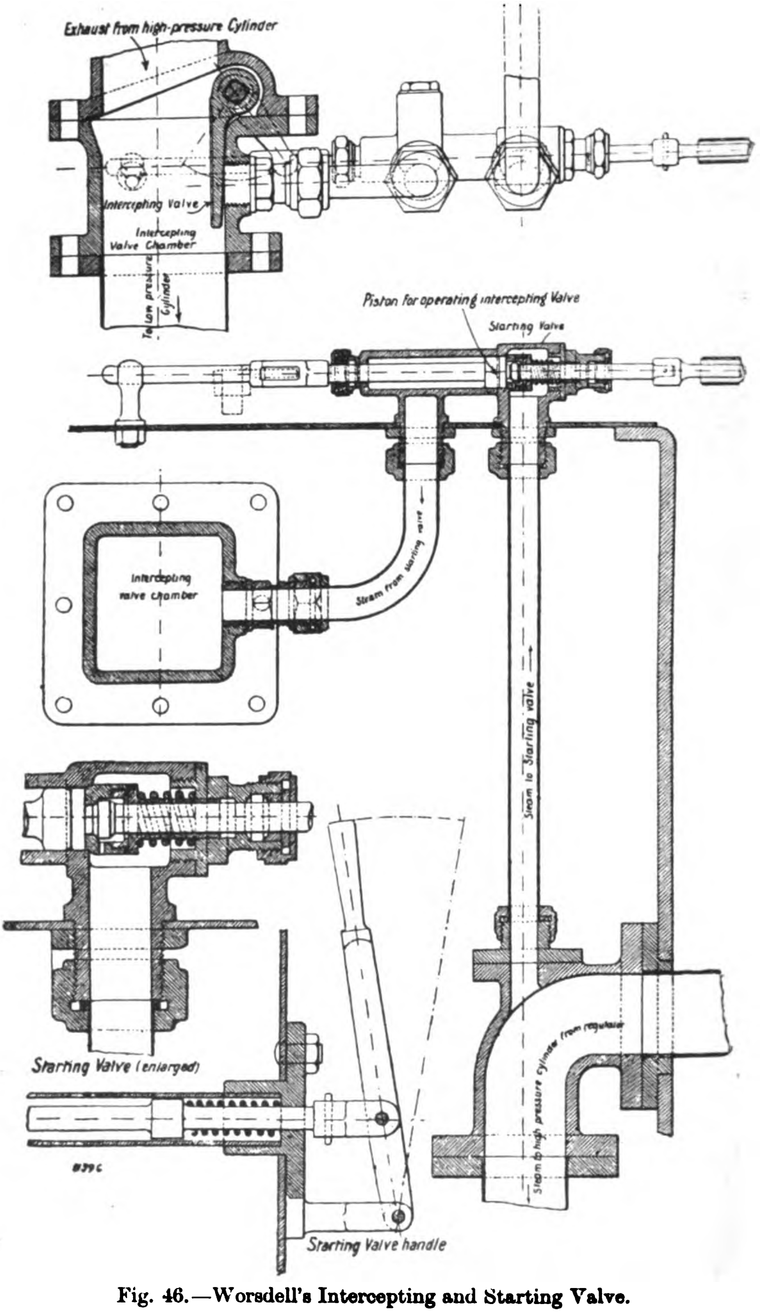

Fig. 46.—Worsdell's Intercepting and Starting Valve.

Lindner System.

A compound passenger locomotive on the Lindner system was built by the Pennsylvania Railroad, from the design of Mr. Vogt. In this engine the high-pressure cylinder is 19½ ins. in diameter and of 28-ins. stroke, and the low-pressure cylinder 31 ins. in diameter and of 28-ins. stroke. The working boiler-pressure is 200 lbs. per square inch. The main valves are of the piston type, each 12½ ins. in diameter, with a maximum travel of 7 ins. in full gear. The valves are reduced near the centre of their length, and the annular cavity thus formed communicates, in the case of the high-pressure valve, with the boiler steam-pipe, and, in the case of the low-pressure valve, with the receiver—a copper pipe of 8 ins. internal diameter. It will be seen, therefore, that the steam for both cylinders is admitted at the centre and discharged at the ends of the valves. The Lindner system is not strictly automatic as regards live steam supply for the low-pressure cylinder at starting, though, when the engine is working in the usual way, it is practically so. Steam is admitted directly from the boiler to the low-pressure cylinder only when the reversing lever is either at the extreme forward or extreme backward position. When the lever is notched up after the first few revolutions, as under ordinary conditions, the admission of steam directly from the boiler to the low-pressure cylinder is cut-off. This system has also been tried on the Saxon State Railroad, and on the Chicago, Burlington, and Quincy Railroad, U.S.

Vauclain System.

At the Baldwin Locomotive Works a great number of compound locomotives have been built on the Vauclain system—a four-cylinder, non-receiver type with a single piston valve for controlling the steam in each pair of cylinders. A great deal is claimed for this system, and it is looked upon by many as the best four-cylinder type of compound locomotive yet designed. The cylinders are arranged two on each side, with the high-pressure cylinder above or below the low-pressure cylinder. The steam chest is cast in one piece with the cylinder casting, and is placed as near the cylinder as possible. The power from both cylinders is transmitted through one crosshead.

The starting valve is not connected in any way with the valve gear of the locomotive, and is worked from the cab by a small lever near the reversing lever.

The steam valve is a hollow piston with solid ends and an annular cavity round the middle. With the valve in a certain position, as shown in fig. 49, the steam from the boiler enters the valve chamber through ports A, and passes from the ports A to ports B, and so into the front end of the high-pressure cylinder. There it expands during the time the port is closed by the valve. At this time the back end of the high-pressure cylinder contains steam that has already been once expanded, and is ready for exhausting into the low-pressure cylinder. This passes through the passage B^1, and thence to the inside of the valve, whence, after flowing from the back to the front end, it enters the passage D and so passes into the front end of the low-pressure cylinder. In the back end of the low-pressure cylinder is steam that has been used in the low-pressure cylinder and is ready for being finally exhausted. This passes from the back end of the low-pressure cylinder through the passage D^1 to the exhaust passage C, and is thence discharged into the atmosphere.

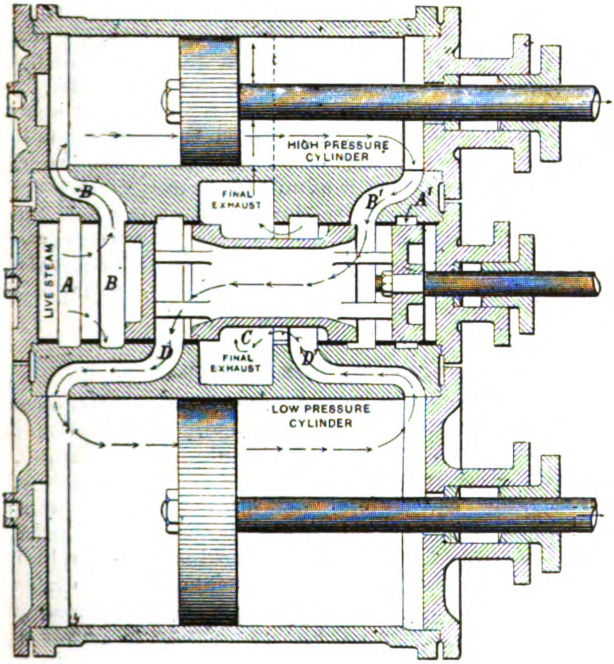

Fig. 49.—Vauclain's Compound Locomotive.

Starting of Compound Locomotives.

Owing to the fact that one cylinder only takes steam from the boiler, the compound engine will not as a rule start a train so satisfactorily as an ordinary engine. In the Mallet and other systems having independent exhaust for the high-pressure cylinder, the starting conditions are, however, almost identical with those of the simple engine. If the high-pressure cylinder is of the same size as one cylinder of the simple locomotive and the cylinder ratio is 2, it is only necessary to admit steam of one-half the boiler pressure into the low-pressure cylinder in order to have starting power equivalent to that of a simple engine, the same boiler pressure being used. If the boiler pressure of the compound is higher than that of the simple engine, and the high-pressure cylinder is of the same size as that of the simple engine, the starting power of the compound may even be greater. In the Worsdell and von Borries type, and others with automatic intercepting valves, the conditions in starting are not so favourable. When steam is admitted to the receiver by means of the starting valve, the intercepting valve is closed and the high-pressure piston therefore starts against the pressure of the steam or air which filled the receiver first before the starting valve was opened. It is generally assumed that the pressure of the steam, which is admitted directly to the receiver in starting, is reduced by wire-drawing to about one-half the boiler pressure. Assuming this to be so, the high-pressure cylinder back pressure will become sufficient to open the intercepting valve when about five-eighths of the second stroke has been accomplished, and the engine thereafter works compound.

Maximum Gain from Compounding.

In fig. 50 the theoretical indicator diagram is shown for an ordinary continuous expansion two-cylinder compound with cranks at right angles; the low-pressure crank leading. The effect of the "receiver drop" is shown very plainly. An average diagram, as actually obtained, is shown superposed, and the discrepancy between the theoretical and practical is seen to be enormous. Evidently the ordinary two cylinder compound entails very much increased diameters for both low and high-pressure cylinders—owing to the low effective mean pressure obtainable—where the object is the production of power equal to that developed by non-compound high-pressure engines. The limit of useful expansions in the high-pressure engine is probably 5, not on account solely of the shortness of the cut-off entailed by this expansion ratio, but principally because of the tremendous compression involved. Even with 5 expansions, compression, which is determined solely by the link-motion employed, begins at about 60 per cent. of the stroke, and cannot be allowed to occur earlier with safety. In the compound engine a ratio of 8 will probably be the limit of useful expansion. If we calculate by the method to be described in the next chapter the mean pressure due to an initial pressure of 1 lb. per sq. in. with these ratios of expansion, we obtain respectively 0·522 and 0·385. To obtain the work done in each case we must multiply by the respective expansion ratios. Hence the maximum theoretical gain by compounding will be, for a boiler pressure of 175 lbs.,

$$\frac{0{\cdot}385 \times 190 \times 8}{0{\cdot}522 \times 190 \times 5} = 1{\cdot}18\text{—or 18 per cent. gain.}$$

TABLE III.—Comparison of Actual and Theoretical Diagrams for Compound Engine.

Points of Comparison.	Theoretical.	Actual.
Speed in miles per hour, ...	30	30
Cut-off in high-pressure cylinder, . .	50 per cent.	50 per cent.
Boiler pressure, ...	160	160
Mean pressure in high-pressure cylinder,	79·5	42
Mean pressure in low-pressure cylinder, .	40·5	20
Mean pressure referred to low-pressure cylinder, ...	77·5	40
Horse-power developed in high-pressure cylinder, ...	319	169·7
Horse-power developed in low-pressure cylinder, ...	339	166·6
Total horse-power, ...	658	336·3

In fig. 51 the speeds are shown solely as related to the driving-wheel diameter. It is based on the author's conclusion, after many observations and experiments on the London and South-Western Railway, that well-designed express engines of normal type with driving-wheels 7 ft. in diameter can maintain an *average* speed between stations, on the level, of 45 miles per hour when the load is heavy and 60 miles per hour when the load is a very light one. Through the two points on the diagram, corresponding to a 7 ft. driving-wheel and these respective speeds, lines are drawn meeting in 0. The upper line then gives the speeds for the minimum load with different diameters of driving-wheels while the lower one gives the speeds for the maximum load. This involves the assumption of a constant number of revolutions per second for all classes of engines. Also, since the diameter of the cylinders in general decreases as we reduce the wheel diameter, and the stroke is made roughly proportional to the cylinder diameter, it also assumes that the piston speed decreases as we reduce the driving-wheels. These assumptions are to a certain extent erroneous, but the diagram nevertheless gives results remarkably close to such as might be expected in practice. A line chosen somewhat arbitrarily has been

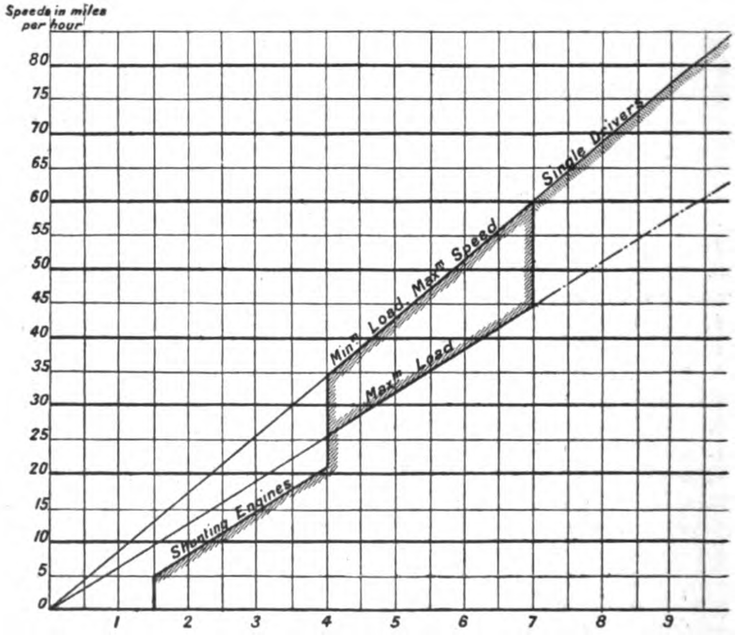

Fig. 51.—Train Velocities in Relation to Diameter of Driving-wheels.

noted that the work done in the cylinders per minute will be equal to R v, where v is the speed in feet per minute. If the speed is increasing, the work done in the cylinders will be greater than R v by the amount necessary to produce the acceleration, while for diminishing speed R v will be greater than the work done in the cylinders.

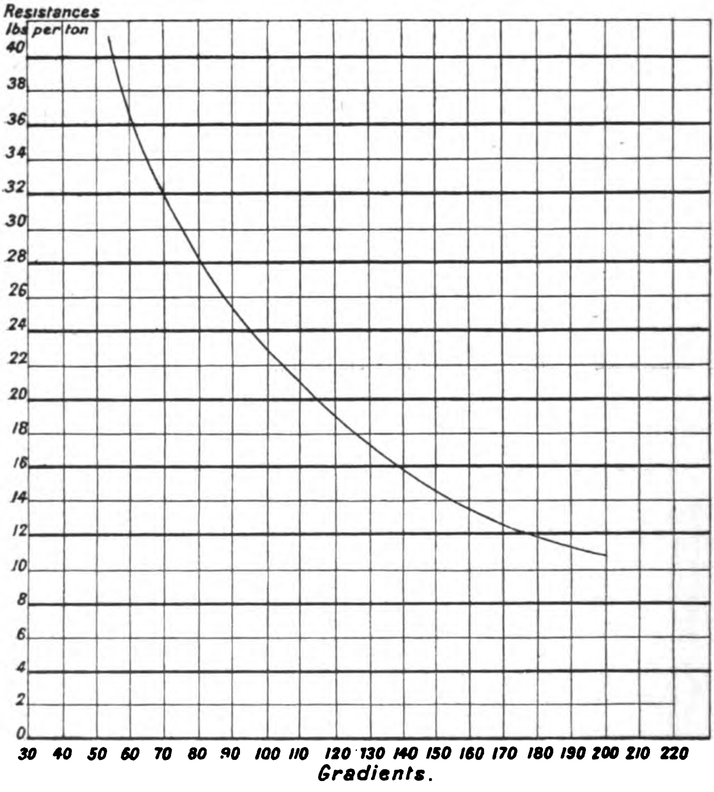

Fig. 54.—Train Resistance due to Gravity.

(3) *Effect of Wind and Curves.*—High winds cause a considerable increase of resistance, varying with the force of the wind and the angle which the direction of the wind makes with the track. The resistance produced by this cause is greatest when the direction is at right angles to the track, the wind acting upon the whole length of train surface producing excessive flange friction. It is of course impossible to estimate accurately the amount of this resistance and its varying effect.

When a series of sharp curves occur in the line, the resistance will be also increased considerably. But for reasons of safety it is

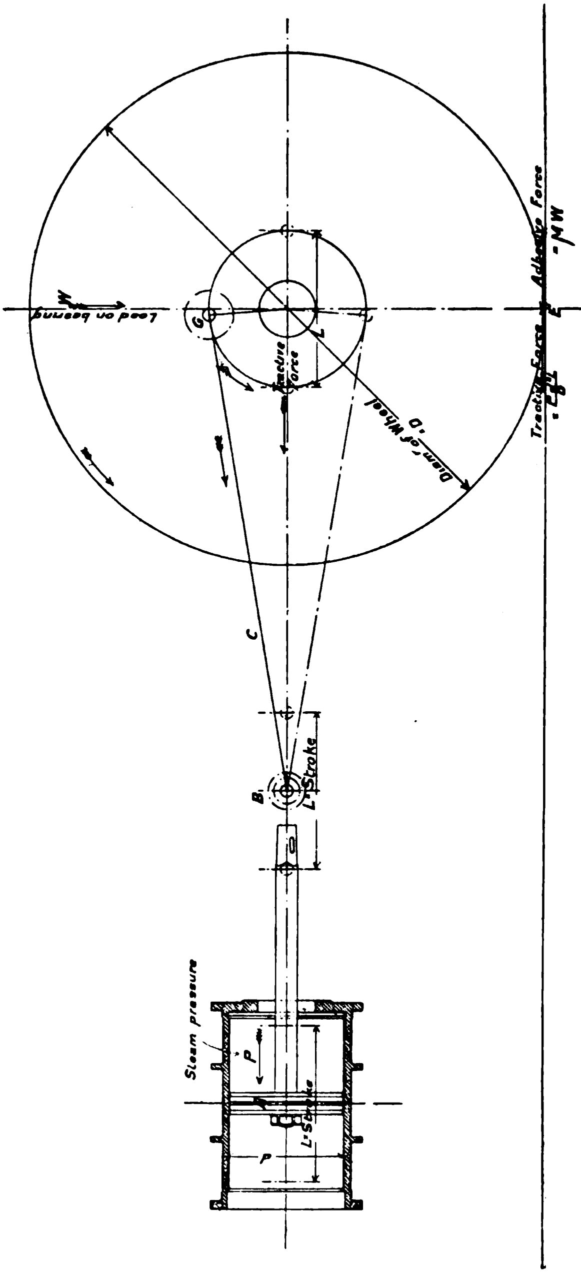

Fig. 55.—Tractive and Adhesive Forces.

tractive effort T, then movement cannot ensue. Also, if the tractive effort is greater than μ W, the point E will no longer serve as a fulcrum, and the wheel will then simply revolve without propelling the engine. In other words, *slipping* will take place. Hence the necessity for the relations—

$$\text{Force of adhesion} > \text{Tractive effort} = \text{Resistance, or,}$$

$$\mu W > T = R.$$

Now, while the wheel of diameter D is making one complete revolution, the piston makes two strokes of length L under the mean effective steam pressure P per square inch. Hence the work done in one cylinder driving one revolution of the driving-wheel $= 2\left(d^2 \frac{\pi}{4} L P\right)$, where d is the diameter of the cylinder. But there are two cylinders in the engine; whence the whole work done by the steam during this period is $= d^2 \pi L P$. This work must be equal to the work done by the tractive force during the same time. Now, while the driving-wheel makes one revolution the centre of the axle, if there is no slip, moves forward a distance πD; and the work done $= \pi D T$. Equating these two values of the work done we obtain

$$d^2 \pi L P = \pi D T; \text{ whence } T = \frac{d^2 L P}{D}. \quad . \quad . \quad (7)$$

(2) *Compound Engines.*—To calculate the tractive effort of compound locomotives, von Borries has given the following rule:—

If d = diameter of low-pressure cylinder.
T = tractive power.
D = diameter of driving-wheels.
p = boiler pressure.
s = stroke of piston.

Then $d^2 = \frac{4T \times D}{p \times s}$; whence T, the tractive effort, can be easily found. If a compound engine of equal power to a given simple engine be required, a good approximation can be obtained by making the low-pressure cylinder of the compound locomotive equal to $1\frac{1}{2}$ times the diameter of the cylinder of the simple locomotive, and using a steam pressure at least 10 per cent. higher. Whilst the simple or single expansion engine has but a very small back pressure, the compound engine has a back pressure on the exhaust side of the high-pressure piston nearly equal to one-half the boiler pressure. It is therefore necessary to use a larger high-pressure cylinder for a compound than for a simple engine.

The cylinder in the compound engine should be about 10 per cent. the larger. The following is a method of calculating the size of cylinders of a compound engine to possess the same maximum power at low speeds as an ordinary engine.

Suppose the simple engine to have—

Boiler pressure = 150 lbs. per sq. in.
Two cylinders of 17 ins. diameter and 24-ins. stroke.
Diameter of wheels = 6 ft.
Effective pressure = e × boiler pressure.

Then, by equation (7), the tractive force $= \dfrac{17^2 \times 24 \times e \times 150}{72}$

or $T = 14{,}450 \times e$.

Suppose also the compound engine to have—

Boiler pressure = 180 lbs. per sq. in.
Intermediate pressure = 70 lbs. per sq. in.
Stroke = 24 ins.
Diameter of wheels = 6 ft.

Let x = diameter of the high-pressure cylinder, and let the capacity of the low-pressure cylinder be double that of the high. Then calculating, as before, the tractive force due to each cylinder separately, and adding, we have—

$$T = \tfrac{1}{2}\,\frac{x^2 \times 24}{72} \times e \times 110 + \tfrac{1}{2}\,\frac{2x^2 \times 24}{72} \times e \times 70 = x^2 + 42e.$$

That is, $14450e = x^2 \times 42e.$
$x^2 = 344.$
$x = 18\tfrac{1}{2}$ ins.—the diameter of high-pressure cylinder.

Also $\sqrt{2 \times 18\tfrac{1}{2}^2} = 26{\cdot}1$ ins. is the diameter of low-pressure cylinder.

This method of estimating is due to Mr. Worthington.

Force of Adhesion.—In order to utilise fully the tractive effort, sufficient adhesive weight must be provided. It is, therefore, necessary to know the value of μ the coefficient of adhesion. This may vary between $\frac{1}{3}$ and $\frac{1}{10}$, but in general it will be found sufficiently accurate to take as an average value $\mu = \frac{1}{4}$ We now have $\dfrac{d^2 L P}{D} = \dfrac{W}{4} = R.$ W, in single driving engines, will be the weight on the driving-wheels only, but in coupled engines it will be the sum of the weights on the coupled wheels. It is evident that the greater the adhesive weight the less the chance of slipping; but in single engines we can only utilise for this purpose the weight on a single pair of wheels. The limit of this weight is 20 tons, the permanent way not being strong enough to stand more. It follows from this that the haulage power of single engines cannot exceed $\dfrac{20}{4} = 5$ tons $= 11{,}200$ lbs.; and this, we must remember, is the average, not the minimum, adhesion. Hence we soon reach a limit to the weight of trains capable of being hauled by single driving-wheel engines.

If then the weights of trains are such that R exceeds 11,200 lbs., we must have recourse to the coupled engine. For can substitute this value in equation (6) to determine the greatest train load that can be started, thus :—

$$\frac{100\,d^2\,\mathrm{L}}{\mathrm{D}} = \{2240\,r + (9 + {\cdot}007\,\mathrm{V}^2)\}\,l.$$

In order to determine the load that can be economically hauled—that is, with a 20 per cent. cut-off—at high speeds, we have in like manner—

$$\frac{80\,d^2\,\mathrm{L}}{\mathrm{D}} = \{2240\,r + (9 + {\cdot}007\,\mathrm{V}^2)\}\,l.$$

But in every case each side of these equations must be less than $\frac{\mathrm{W}}{4}$ if slipping is to be avoided.

These estimates are based on a theoretical calculation of the mean steam pressure during expansion. Actual indicator diagrams do not conform to the theoretical diagram as shown on fig. 56 by an amount which will be on the average 20 per cent. less, due to wire-drawing, cylinder condensation, shortening of cut-off at high speeds, compression, and other causes. Hence, making a further allowance for this, we have

$$\frac{{\cdot}8 \times 80 \times d^2 \times \mathrm{L}}{\mathrm{D}\{2240\,r + 9 + {\cdot}007\,\mathrm{V}^2\}} = l \quad . \quad . \quad . \quad . \quad . \quad (9)$$

the gross train load for economical running. This is much less than according to the above estimates could be started; but since at starting we have to overcome the inertia of the train, in addition to the frictional resistance, it will be found that this formula will give not only the load which it is estimated the engine will haul at the average speed V, but also the maximum load which it may be expected to start under all conditions of wind and weather.

Now, if we wish to know the load that can be hauled at a speed of 45 miles per hour by an engine having 19 ins. by 26 ins. cylinders, 7 ft. wheels, and a boiler pressure of 175 lbs. per sq. in., we have—

$$\frac{{\cdot}8 \times 80 \times 19^2 \times 26}{84(9 + {\cdot}007 \times 45^2)} = 308 \text{ tons.}$$

The same engine would at 60 miles per hour haul

$$\frac{{\cdot}8 \times 80 \times 19^2 \times 26}{84(9 + {\cdot}007 \times 60^2)} = 206 \text{ tons.}$$

At 45 miles per hour up a gradient of $\frac{1}{100}$ it would haul

$$\frac{{\cdot}8 \times 80 \times 19^2 \times 26}{84\left(\frac{2240}{100} + 9 + {\cdot}007 \times 45^2\right)} = 157 \text{ tons.}$$

At 60 miles per hour and a gradient of $\frac{1}{100}$ the load would be 126 tons.

For an engine with cylinders 15 ins. by 20 ins. and 4 ft. wheels, boiler pressure 175 lbs. per sq. in., and speed of 26 miles per hour

$$\frac{\cdot 8 \times 80 \times 15^2 \times 20}{48(9 + \cdot 007 \times 26^2)} = 438 \text{ tons},$$

and for a gradient of $\frac{1}{100}$ = 160 tons.

By this method of calculation the curves in fig. 57 have been obtained. They show the effect of gradients, and also the effect of altering the diameter of the cylinders.

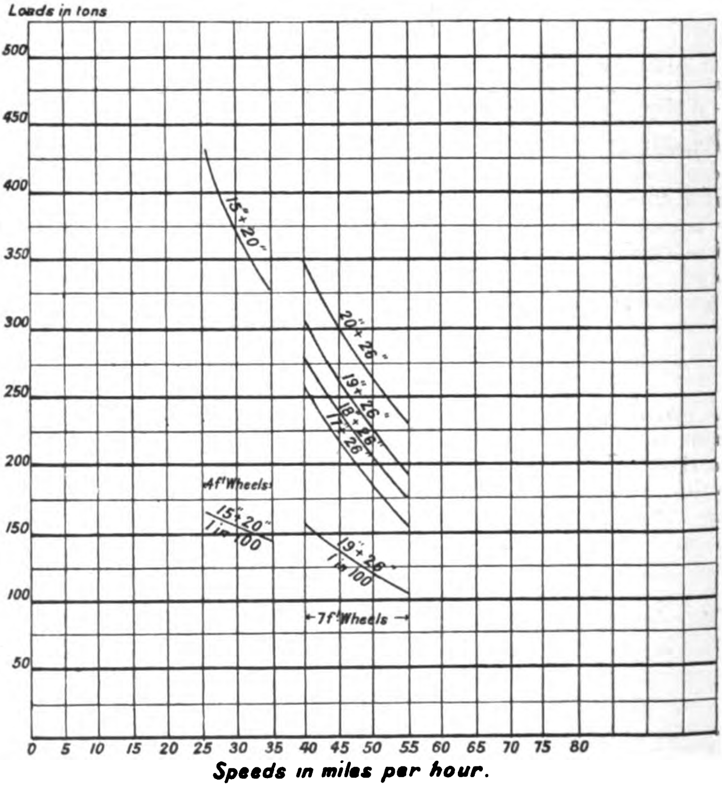

Fig. 57.—Gross Train Loads.

For boiler pressures different from 175 lbs. we may without serious error assume $P = \frac{1}{3} p$, where p is the effective initial pressure after allowance has been made for cylinder and other losses.

In calculating the haulage power of locomotive engines, it should be noticed that the loads in general ought to be such as the engine

TABLE IV.—HEATING SURFACE.

d = Diameter of Cylinder in Inches.	$3\,d^2$	Heating Surface in Practice.		$3{\cdot}3\,d^2$
		Minimum.	Maximum.	
16	768	823	1068	998
17	867	888	1145	1127
18	972	922	1242	1263
19	1083	984	1320	1407
20	1200	...	1672	1560

Limits to the Design of Locomotives of Great Power.—It will be interesting to note a few difficulties in the way of producing an exceptionally powerful locomotive.

In order to reduce the number of trains and to avoid duplicating express services, traffic managers—who are always on the look-out for means to minimise the expenses of their departments—are continually demanding from locomotive superintendents a locomotive having a power 50 per cent. in excess of that developed by existing locomotives.

It may be taken for granted that the most powerful locomotive of normal type has cylinders of 19 ins. diameter and 26-ins. stroke. Since, if all other essentials are equal, the power developed by different engines will vary as the square of the cylinder diameter, we have

$$\sqrt{19^2 \times 1{\cdot}5} = 23{\cdot}27 \text{ ins.}$$

as the cylinder diameter for a locomotive capable of developing 50 per cent. more power than those of the most powerful class of existing locomotives. This is almost the largest permissible diameter of cylinders that can be accommodated between the engine frames, owing to the limitation imposed on the width of the frames by the 4 ft. 8½ ins. gauge. Even with cylinders of this diameter the valves would have to be arranged either at the top or bottom of the cylinders. If we further assume that a grate area of 20 sq. ft. is sufficient for an engine with cylinders of 19 ins. diameter and 26-ins. stroke, then for an engine with cylinders of 23¼ ins. diameter we should require 30 sq. ft. of grate area. For the same reason, however, that the diameter of the cylinder cannot exceed a certain limit, the width of the grate cannot exceed 3 ft. 6 ins.

Since $\frac{30}{3{\cdot}5} = 8{\cdot}5$, we find, therefore, that 8 ft. 6 ins. would be the length of grate required to give the proper grate area. It is very doubtful whether a grate of this length could be worked economically. Under any circumstances it would entail at least a distance of 11 ft. 8 ins. between the centres of the coupled wheels in order to get a firebox with a grate of this length between the axles. A coupled engine, of course, is assumed, for with a single engine sufficient adhesion could not be secured for cylinders of 23¼ ins. diameter.

Coupling-rods of a length of 11 ft. between centres seem to be out of all question. Hence resort must be made to abnormal types, such as Mr. Winby's locomotive, having four cylinders of moderate diameter; two inside working on to the front driving-wheels and two outside working on to the rear driving-wheels. With compound locomotives a much greater cylinder diameter than 23¼ ins. would have to be adopted, owing to the fact that the mean effective pressure in the cylinders is less than in the case of the non-compound engine.

It has been remarked above that 11 ft. coupling-rods seem out of the question; but it should be remembered that when compound engines were first introduced in England, the extreme length of coupling-rods was 9 ft. Engines are now running in this country with coupling-rods 9 ft. 6 ins. in length between centres, and in France with 3 metres (9 ft. 10⅛ ins.) between centres.

TABLE V.—RESISTANCE DUE TO VELOCITY.

Velocity in Miles per Hour.	Resistance in Lbs. per Ton.	Velocity in Miles per Hour.	Resistance in Lbs. per Ton.
10	9·70	50	26·50
15	10·57	55	30·17
20	11·80	60	34·20
25	13·37	65	38·57
30	15·30	70	43·3
35	17·57	75	48·37
40	20·20	80	53·80
45	23·17		

TABLE VI.—RESISTANCE DUE TO GRAVITY.

Gradient.	Resistance due to Gravity.	Gradient.	Resistance due to Gravity.
	Lbs. per ton.		Lbs. per ton.
Level	0·00	1 in 65	34·46
1 in 1000	2·24	1 in 60	37·33
1 in 500	4·48	1 in 55	40·72
1 in 400	5·60	1 in 50	44·80
1 in 300	7·46	1 in 48	46·66
1 in 200	11·20	1 in 46	48·70
1 in 180	12·43	1 in 44	50·90
1 in 160	14·00	1 in 42	53·33
1 in 140	16·00	1 in 40	56·00
1 in 120	18·66	1 in 38	58·94
1 in 100	22·40	1 in 36	62·22
1 in 90	24·88	1 in 34	65·88
1 in 80	28·00	1 in 32	70·00
1 in 75	29·86	1 in 30	74·66
1 in 70	32·00		

TABLE VII.—MEAN EFFECTIVE STEAM PRESSURE* AT DIFFERENT RATIOS OF EXPANSION.

Initial Pressure. Lbs. per sq. in.	Ratio of Expansion. Lbs. per sq. in.			
	75 per cent.	50 per cent.	25 per cent.	20 per cent.
100	92·0	78·2	49 5	41·0
120	111·4	95·2	61·4	51·4
140	130·7	108·1	73·3	61·9
150	140·3	120·5	79·3	66·0
160	150·0	129·0	83·3	72·3
175	164·5	141·7	94·2	80·1
180	167·3	145·8	97·2	82·7
200	188·6	162·8	109·1	93·2

---

* A deduction of 20 per cent. should be made from these values for loss due to wire drawing, cylinder condensation, shortening of cut-off at high speeds, compression, and other causes.

over 18 ins. with sufficiently large steam passages and ample thickness of metal. More especially is this the case when the valves are placed between the cylinders. Notwithstanding this, inside-cylinders are usually made with the valves disposed between them. As before remarked, great difficulty is found in designing cylinders of this type of more than 18 ins. diameter; although Mr. James Stirling, of the South-Eastern Railway, has very ingeniously succeeded in devising such cylinders for his express engine (fig. 44) of as much as 19 ins. diameter. Mr. M'Intosh's new engines also

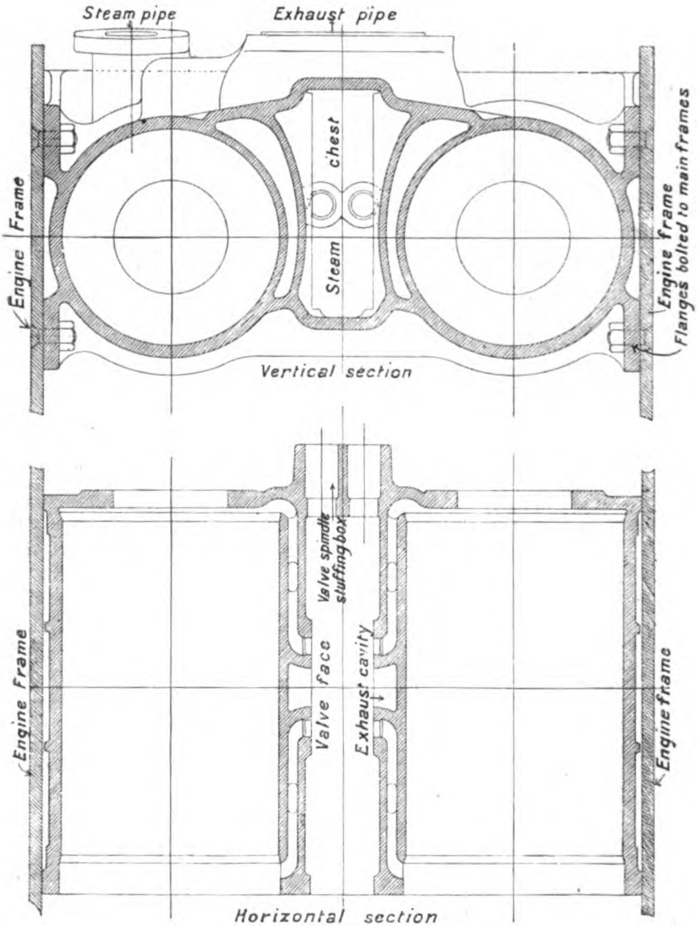

Fig. 58.—Inside-Cylinders with Valves between.

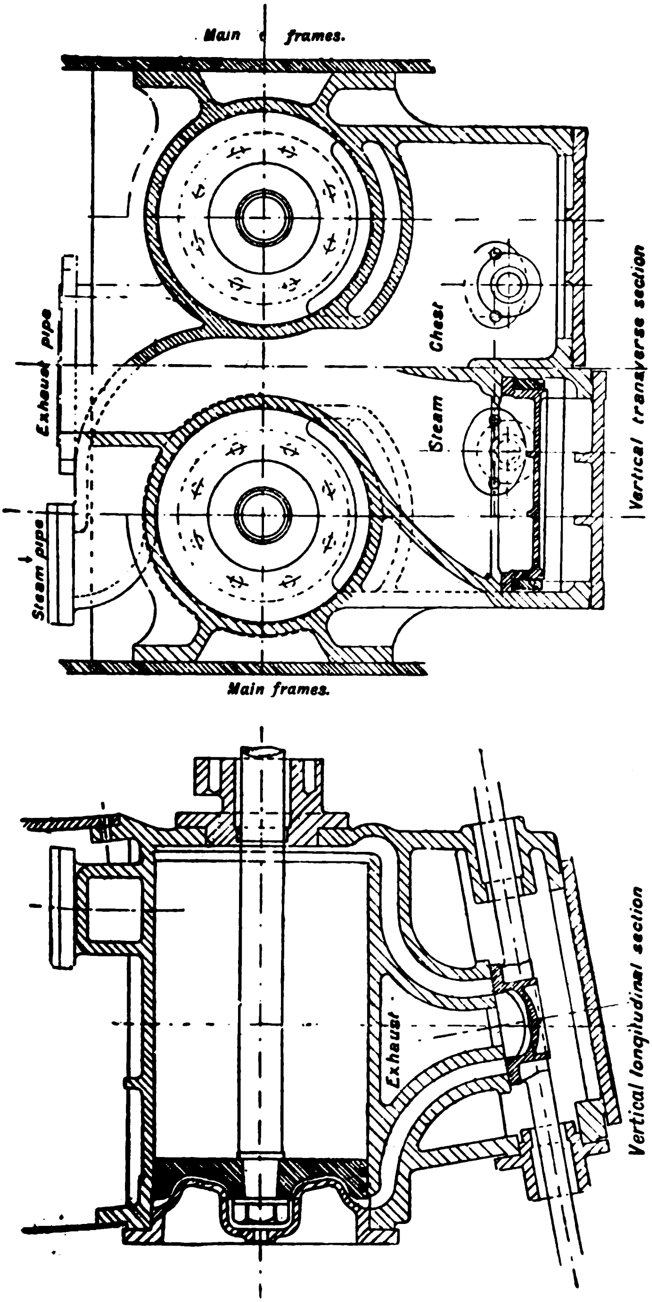

Vertical transverse section

Vertical longitudinal section

Fig. 59.—Inside Cylinder with Valves underneath.

have inside-cylinders of 19 ins. diameter. Inside-cylinders of this kind are still adhered to as they have many advantages, being lighter than cylinders with steam-chests above or below, less costly, very compact and neat. The steam-chest covers also are more easily kept tight, and there is less exposed surface to cause loss of heat.

In some cases cylinders are made with the valves on the top—as on the North-Eastern Railway, the Lancashire and Yorkshire Railway, and formerly, in some cases, on the Great Eastern Railway. Cylinders with valves underneath (see fig. 59) are used on the London, Brighton, and South Coast Railway, the Great Eastern Railway, and the London and South-Western Railway. The advantages claimed for cylinders of this type are that, as the cylinders can be placed closer together—namely, 24 ins. from centre to centre—as on the Great Eastern Railway, the crank-webs and axle-bearings can be made much larger; also that there is a better drainage of the cylinders, and the slide valves are kept well lubricated. On the other hand, as in the case of cylinders with the valves above, the cylinders are heavier and more costly to manufacture, and there are more covers and joints to keep tight. The steam-chests also are very liable to crack owing, perhaps, to their exposed position, or, perhaps, to the greater difficulty in casting.

Outside-Cylinders.—The London and South-Western express engine outside-cylinders (fig. 60) are of 19 ins. diameter and 26-ins. stroke. Great care has been taken in designing them with a view to the avoidance of loss of heat; the exhaust cavity being clear of the cylinder walls and kept well enclosed. The ports are $1\frac{3}{8}$ ins. by 16 ins., and their area 21·6 sq. ins. after allowing for the rounding of the corners. This gives 1 sq. in. to every 341 cub. ins. of cylinder capacity. The clearance is about 7 per cent.

Outside-cylinders as shown in fig. 61 generally have two steam-chest covers; the large one B towards the inside to enable the port-face or valve-seat of the cylinder to be faced up and the steam-ports to be trimmed and finished, and the front cover A, which is the one taken off most frequently, for inserting or withdrawing the slide valve. But by the aid of the machine above mentioned access to the cylinder port-face for finishing can be obtained from the front end and the large inside cover can be dispensed with. The cylinders for the London and South-Western Railway express bogie engines are made in this way as shown in fig. 60. This arrangement effects a saving in maintenance.

The question as between inside- and outside-cylinders does not concern the cylinders alone. It is one that affects the whole design of the engine. Some remarks have been made on this subject in Chapter ii., but it may be well to mention again the points which are relative solely to the cylinders. There is first the cooling effect due to the exposed position of outside-cylinders, which, as before stated, may amount to an excess of 16 per cent. in the condensation that takes place to the disadvantage of outside-

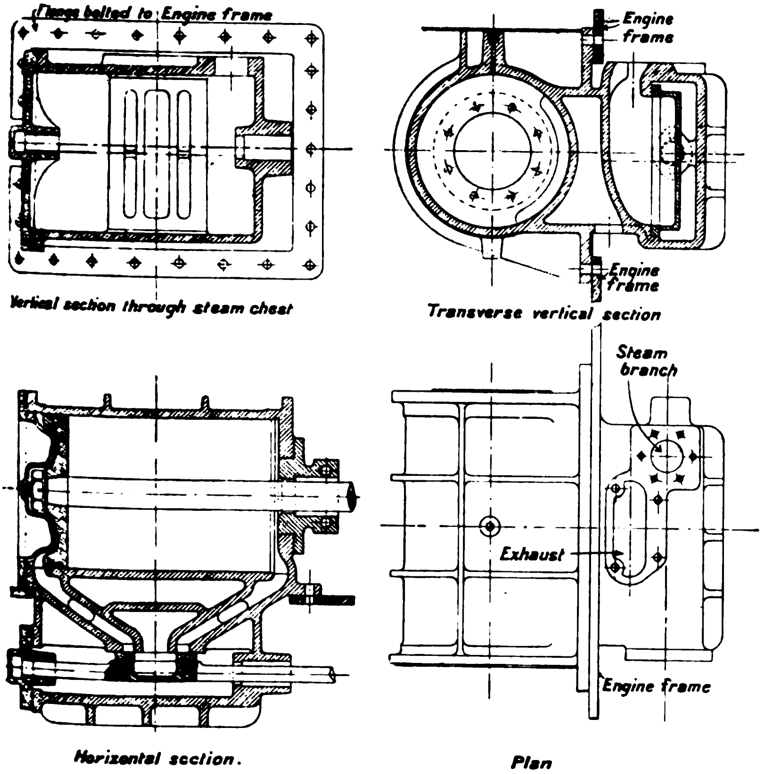

Fig. 60.—Outside-cylinders.

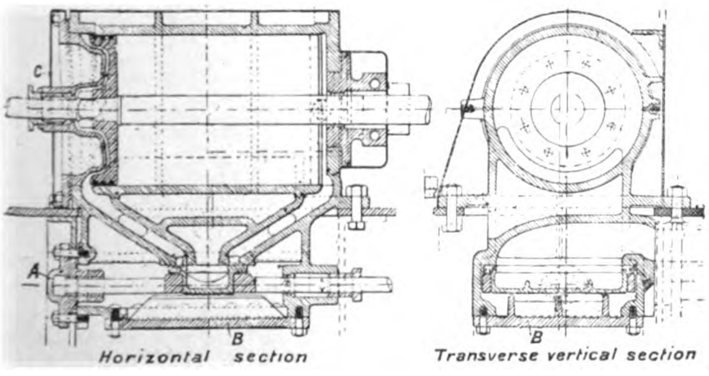

Fig. 61.—Outside-cylinders with Two Steam-chest Covers.

cylinders as compared with the inside. But, on the other hand, there is also the difficulty of designing inside cylinders of adequate size in all respects; sought to be overcome to some extent by placing the valves above or below. As against this, outside cylinders may be made of larger dimensions without great difficulty.

Cylinders for Compound Locomotives.—The cylinders of compound locomotives differ but little, except in respect of the larger size of the low-pressure cylinder and the largely increased size of the ports and passages in the latter from those of simple locomotives. Fig. 62 shows a set of cylinders for a two-cylinder compound engine on the Worsdell or von Borries system.

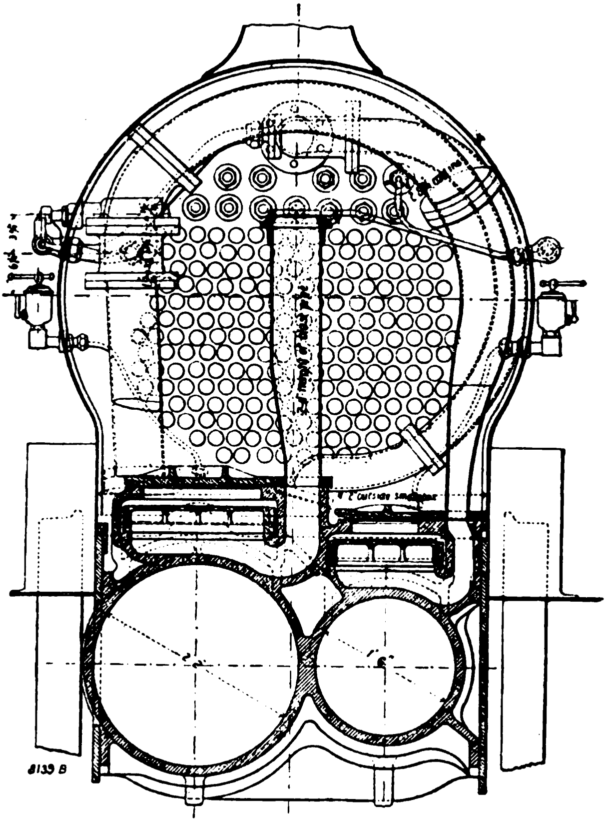

Fig. 62.—Cylinders for Worsdell's Compound Engines.

The cylinder ratios—that is, the ratio of the capacity of the low- to the high-pressure cylinders—which have been used for two-cylinder compounds range from 2·75 for small engines to 1·75 for

piston-area × ·07, a convenient length being from 0·5 to 0·8 of the cylinder diameter.

The following table shows the dimensions of the steam ports adopted in certain of the various classes of modern engines enumerated in Chapter ii.

TABLE VIII.—RELATION OF STEAM PORTS TO SIZES OF CYLINDERS.

Railway.	**Class of Engine.**	**Diameter of Cylinder.**	**Stroke.**	**Length of Steam Port.**	**Width of Steam Port.**	**Width of Bar.**
		Ins.	**Ins.**	**Ins.**	**Ins.**	**Ins.**
London and South-Western,	*a* Express	19	26	16	1⅜	1⅛
	be Mixed Traffic	18	26	15½	1⅜	1
	bc Small Tank	17½	24	14	1⅜	1⅛
Great Eastern, .	*be* Express	18	24	15	1½	...
	bc Mixed Traffic	17½	24	15	1½	1⅛
North-Eastern, .	*f* Express	19	26	14	1¾	1⅛
	d Express compound	20	24	17	1¾	...
	d Goods compound H.P.	18	24	11¾	1¾	1⅛
	d Tank compound H.P.	18	24	11¾	1¾	1⅛
Lancashire and Yorkshire, .	*bd* Express	18	26	13½	1⅝	1
South-Eastern, .	*bc* Express	19	26	16	1½	1½
London, Chatham, and Dover,	*bc* Express	18	26	15	1½	1
	bc Goods	18	26	15	1½	1
	bc Tank	17	24	14	1⅜	1
District, . .	*a* Tank	17	24	13½	1⅜	1⅛
Highland, . .	*a* Express	18	24	15	1½	1¼
	a Goods	20	26	16	1⅝	1¼
Great Northern, .	*bc* Express	18½	26	16	1½	...
	a Express	18	28	14	1½	...
London, Brighton, and South Coast,	*be* Express	18¼	26	15	1⅜	...

a Outside-cylinder.
b Inside-cylinder.
c Valves inside.

d Valves on top.
e ,, at bottom.
f ,, outside.

The valve-face should project from ½ inch to ¾ inch above the casting to allow for wear and re-facing, and the steam-chest should

to the piston and nut on the piston-rod, allowing the necessary ¼ in. or ⅜ in. clearance. The cover should enter the cylinder about ¼ in. The centre of the cover will accordingly assume a corrugated form, but the front is made to appear level externally by means of a piece of ⅛ in. plate fitted in as seen in fig. 60. Another type of cover is cast hollow with two thicknesses of metal, fig. 63. This does away with the plate, but involves the production of a more expensive and difficult casting.

The steam-chest cover should be of sufficient thickness—from 1 in. to 1¼ in.—and well ribbed to take the full steam pressure. Especial care must be taken if the covers are large that they are sufficiently rigid, as should the covers spring at the joints the oil at the high temperature will soon eat its way into the joints and corrode both the face and cover. Very frequently steam-chest covers have dummy glands cast on them, which are bored and fitted with a brass bush as a guide for the front end of the valve spindle. This keeps the slide valve from rubbing on the bottom of the steam-chest, and gives a longer life to the valve spindle.

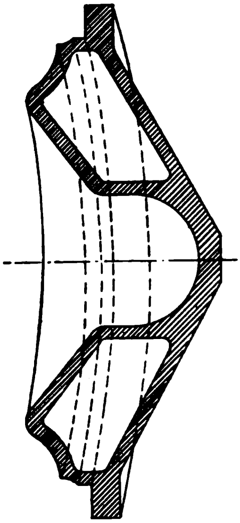

Fig. 63.—Cylinder Covers.

Bolts, Studs, and Nuts.—Studs are almost entirely used for securing the cylinder and steam-chest covers. Both studs and nuts should be made of the best Yorkshire iron, and must be strong enough to allow them to be so tightened up that the joint does not leak. The strain put upon them in thus tightening them up is greater than that due to the steam pressure in the cylinder. For locomotive cylinders the studs are usually ⅞ in. in diameter. If d be the diameter of the studs at the bottom of the thread—*i.e.*, the effective section—and

D = diameter of cylinder,
p = pressure in the cylinder in lbs. per sq. in.,
n = number of bolts or studs,
f = safe limit of stress in the iron employed = 2400 lbs. per sq. in.,

$$\text{then } d = D\sqrt{\frac{p}{n\,f}}.$$

The pitch of studs in cylinders or steam-chest covers in inches should not be more than

$$\sqrt{\frac{t \times 100}{p}}$$

when p = pressure per sq. in. lbs.
t = thickness of flange of cover in sixteenths of an inch.

CHAPTER VI.

PISTONS, PISTON-RODS, CROSSHEADS, AND SLIDE-BARS.

CONTENTS.—Forces on Piston-rod and Slide-bars—Piston-heads—Piston-rods—Crossheads and Slide-bars.

WE have now to examine the best forms for the parts constituting the driving mechanism of the locomotive, and to consider the proportions of these parts so that as far as possible the disposition of the material shall be proportionate to the loads falling upon them. We must also ensure that the weights of these parts shall be kept as small as possible consistently with safety. Otherwise we shall find their inertia at high speeds extremely detrimental. It must be remembered that the resistances due to inertia vary directly as the square of the velocity and the weight of the moving parts.

Forces on Piston-Rod and Slide Bars.—We will first determine some of the stresses on the various parts.

If D is the cylinder diameter, and p the steam pressure, which for the present we suppose constant, then the greatest effective load on the piston and piston-rod is

$$P = 0{\cdot}785\ D^2\ p.$$

Neglecting also for the present transverse strains due to inertia, which are dealt with in the succeeding chapter, we find that the crosshead is acted upon by three forces, as shown in fig. 68. These comprise the load P on the piston and rod, the re-action R of the connecting-rod, and the vertical thrust S on the crosshead and slide-bar.

From the triangle of forces—denoting by c the throw of the crank—

$$S = \frac{P\ c}{L} \text{ nearly.}$$

R has in extreme cases a value 8 per cent. greater than P, but for practical purposes it will be sufficient to suppose that R = P, since, as will be shown hereafter, the estimation of all the straining forces acting on the connecting-rod can be only roughly approximate.

Piston-Heads.—Figs. 69 to 72 show four forms of piston-heads now in general use for locomotives.

The conical form (fig. 69) gives the maximum of strength for a given thickness of piston-head. It is used on some railways

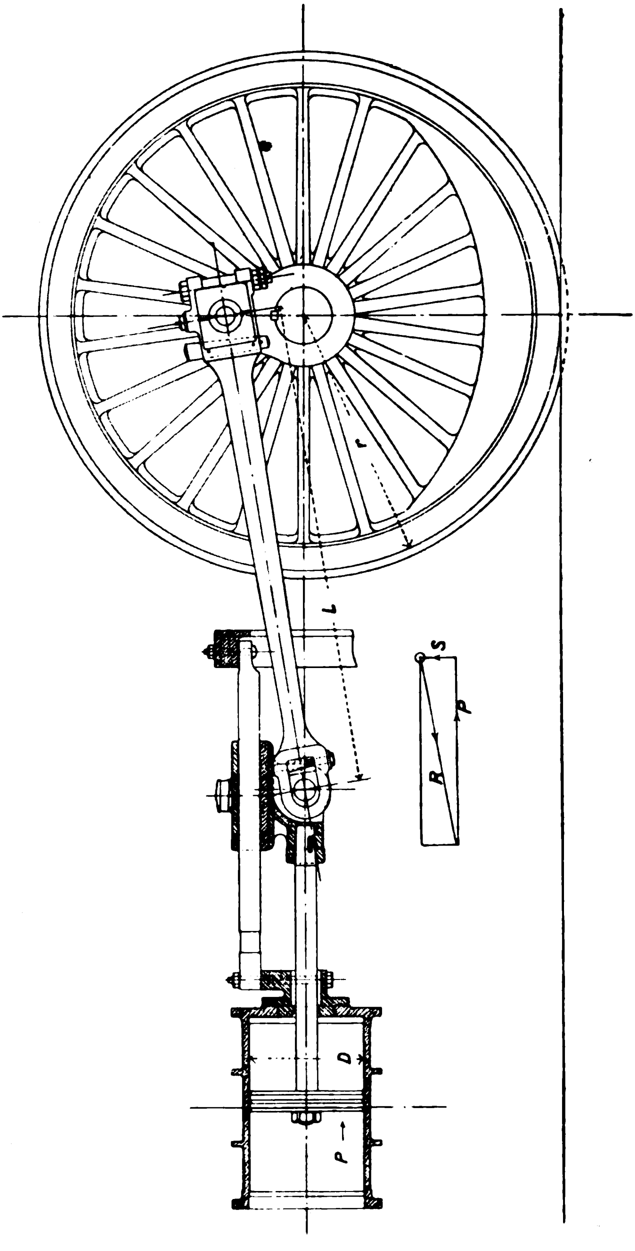

Fig. 68.—Forces on Piston-rods, Slide-bars, and Connecting-rods.

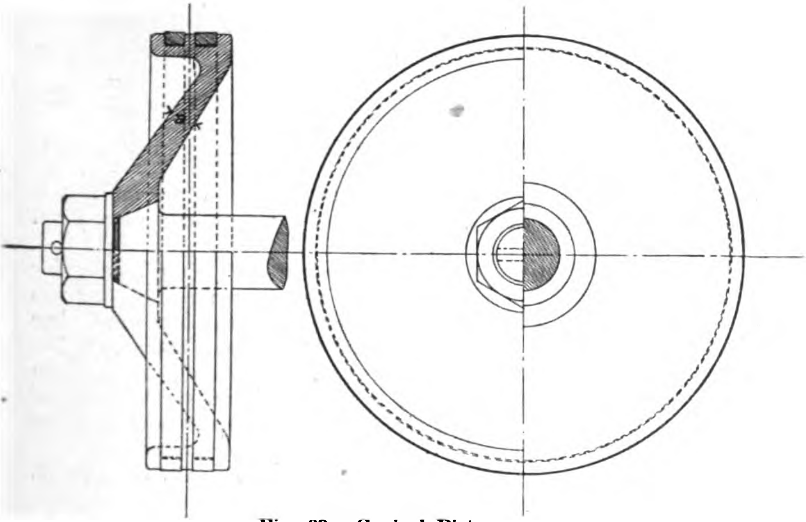

Fig. 69.—Conical Piston.

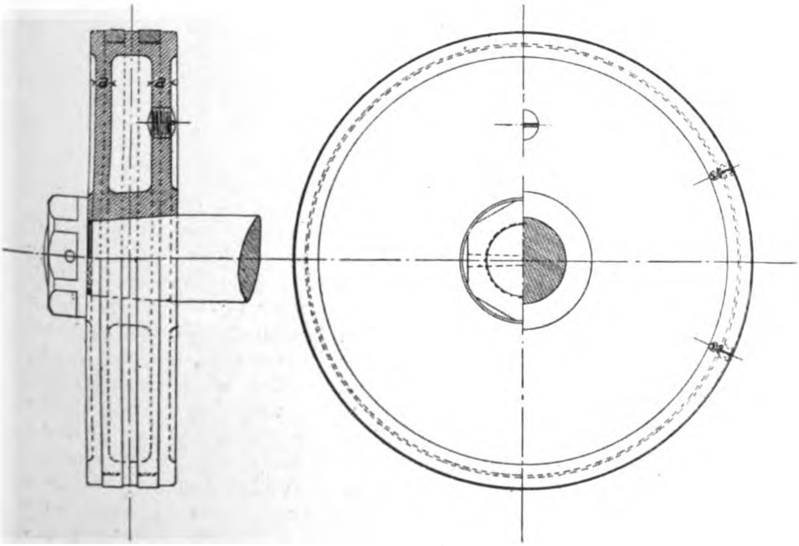

Fig. 70.—Block Piston.

because of its lightness and also because the leading axle can be placed a little nearer the centre of the cylinders. Fig. 70 shows a block piston, cored out, the core being extracted by means of holes, afterwards closed by screwed plugs, in each side of the piston.

Figs. 71 and 72 show the forms most commonly adopted. The least thickness, *a*, of the piston-head may be $\frac{\sqrt{D}}{3}$ in the types of pistons shown in figs. 71 and 72; 0·8 of this value for that in fig. 69; and 0·5 for that shown in fig. 70, where D = diameter of the cylinder.

Piston-heads of steel have been tried, but were abandoned owing to the grooving which resulted from the hard steel coming into contact with the cylinder barrel when the packing had worn. The method of packing by two rings of cast iron turned and sprung into the cylinders is now almost universal. Three rings have been tried, but two seem sufficient to keep the piston tight. Rings of steel, gun-metal or brass, do not give good results, owing, as the case may be, either to their excessive hardness or softness.

Piston-Rods.—The best form of piston-rod is, as shown in fig. 73, made entirely without collars.

The collar *b*, shown in fig. 72, is apt to cause breakage within the piston-heads at C.

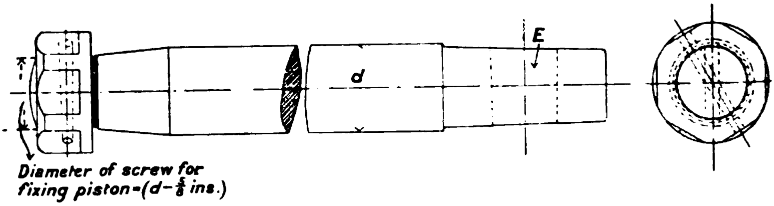

Fig. 73.—Piston-rod.

The principal cause of the breakage of piston-rods is want of alignment of the moving parts or mechanism of the engine, owing to the excessive wear of the crosshead slipper or slide-blocks. This excessive wear is in most cases due to the use of material in the slide-blocks which has not the required hardness. The best material for crosshead slippers or slide-blocks is cast iron, but the casting may be soft, and in that case will wear away with great rapidity, and at the same time will give rise to great friction at the slide-bars unless the soft casting is immediately replaced by one of harder material. Under these circumstances the piston-rod springs out of line and quickly fractures, usually in the vicinity of some collar or enlarged part, if there be such in the rod. For this reason the diameter, *d*, of the rod (fig. 73) cannot with any accuracy be calculated solely with reference to the piston load; but allowance

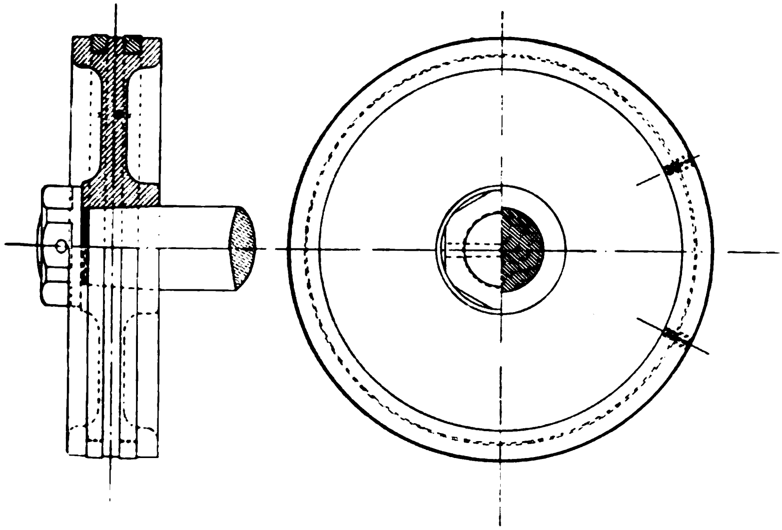

Fig. 71.—Piston-head, Scotch Class.

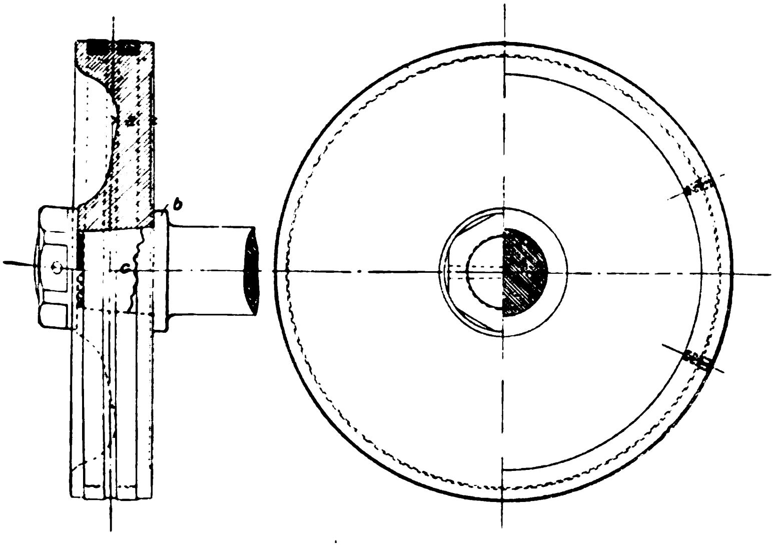

Fig. 72.—Common Form of Piston-head.

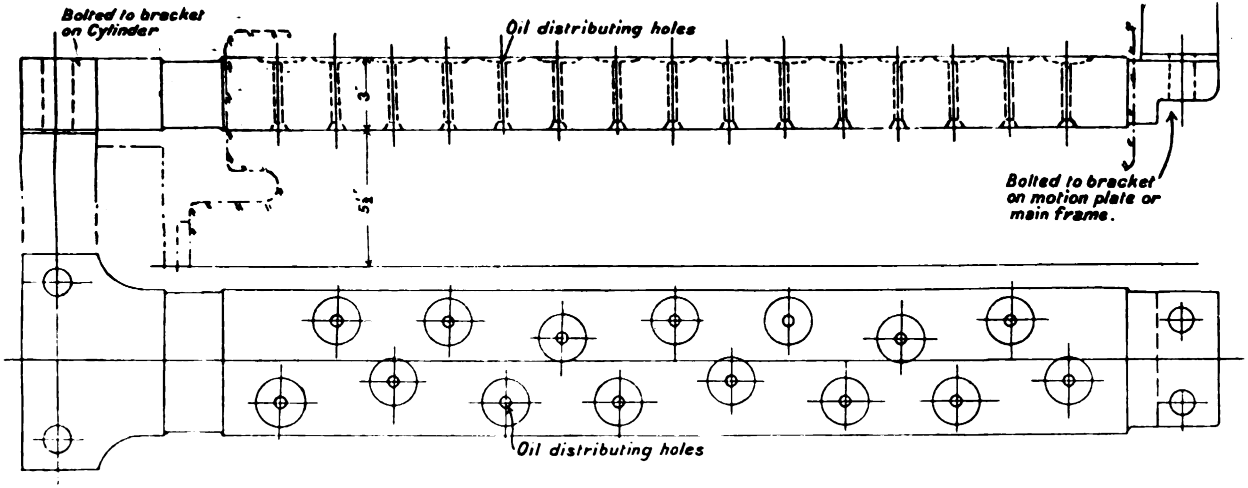

Fig. 76.—Single Slide-bar.

the overhanging portion round the piston-rod causing a bending action on the piston-rod. Of these two examples the form shown in fig. 75 is clearly preferable, since the slide-bars are enclosed completely by the cast-iron slides, and are not in contact at the sides with gun-metal strips A, as is the case with the form shown in fig. 74. This is apt to cause heating and abrasion of the bar. The method of oiling through the gudgeon-pin, B, shown in both these examples, is also to be recommended. Otherwise the draught caused by the motion of the engine blows away the oil after it has left the end of the oil-pipe and before it has entered the oil-hole in the connecting-rod. Moreover, oil-holes at the small end of the connecting-rod are objectionable when drilled through the solid part of the rod, fracture often occurring at this point.

The form of slide-bar on which crossheads of this kind work is exemplified in fig. 76. Care should be taken in designing this type of crosshead, which has been growing in favour for many years, both in this country and in America, that its weight is not allowed to become too great. The weight of these has indeed increased so much on some lines that it has caused the breakage of a great number of piston-rods, and has resulted in a return to two slide-bars and a crosshead of the form shown in fig. 77. Cast steel is, in many instances, being substituted for cast iron in crossheads, entailing a great saving in the weight—in some cases amounting to over 25 per cent. With cast-steel crossheads it is necessary to have cast-iron shoes for the wearing surfaces, or to have them lined with anti-friction metal.

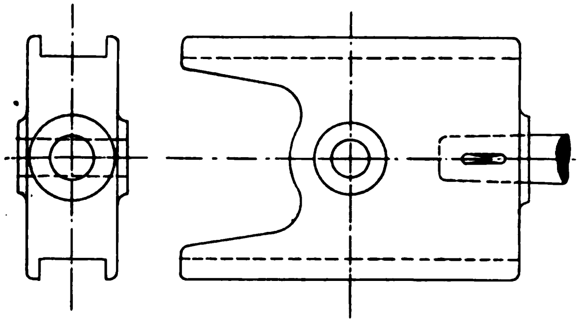
Fig. 77.—Two-bar Crosshead.

Fig. 78 shows a form of crosshead for two slide-bars, which are illustrated in fig. 79, the crosshead being of wrought iron and the shoes or slide-blocks of cast iron. Fig. 80 shows a form of crosshead and slide-blocks for four slide-bars, which are illustrated in fig. 81. In this type the crosshead is of wrought iron, and the slide-blocks of cast iron. The gudgeon-pin passes through the slide-blocks and the crosshead, and is enlarged in the latter to

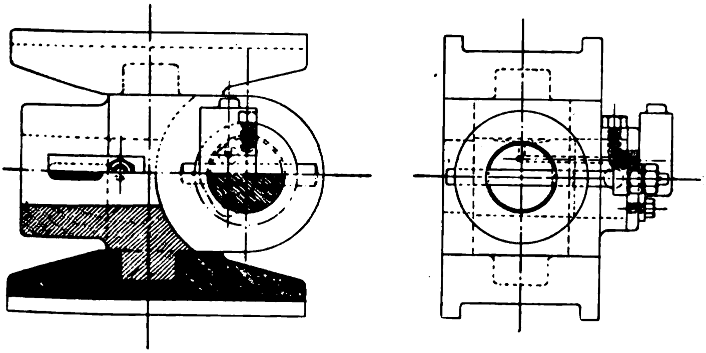

Fig. 78.—Two-bar Crosshead.

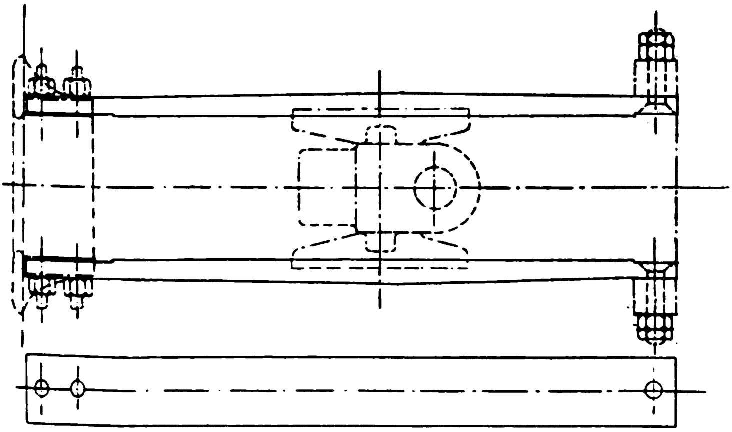

Fig. 79.—Two-bar Crosshead Guide.

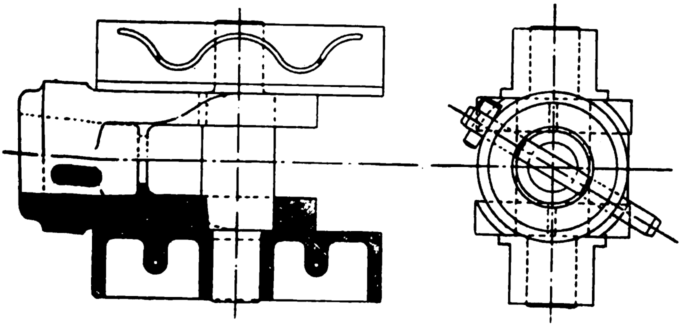

Fig. 80.—Four-bar Crosshead.

furnish sufficient bearing surface for the small end of the connecting-rod.

The least area of the crosshead slippers or shoes on one side should be $\frac{D^2}{4}$. For single slide-bar crossheads the number of bolts should vary from 6 in small to 10 in the largest engines, and have a diameter of $\frac{3}{4}$ in. to $\frac{7}{8}$ in. The diameter of the crosshead gudgeon may be $(d - \frac{1}{8})$ ins. Here D, as before, denotes the diameter of the cylinder, and d that of the piston-rod.

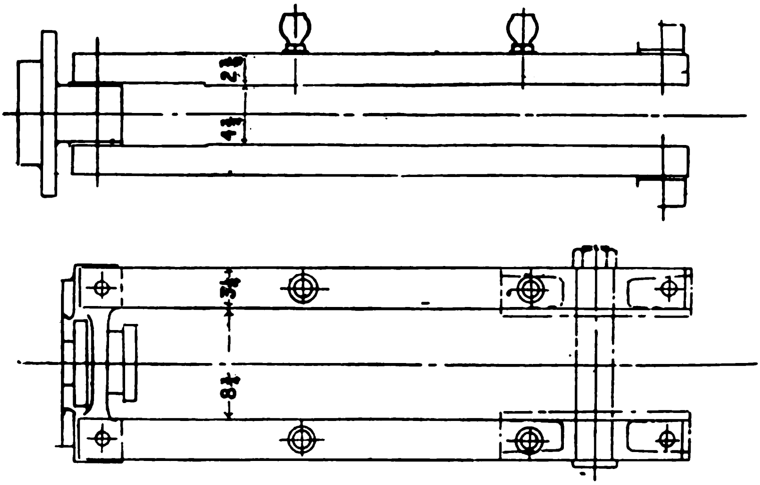

Fig. 81.—Four-bar Crosshead Guide.

Substituting in this the value of W obtained above, we find—

$$f = 3\,\frac{L^2 R}{h} \text{ roughly.}$$

Let us take as the length of the connecting-rod six times that of the crank, so that—L being in inches—

$$R = \frac{L}{12 \times 6}.$$

Inserting this value and the numerical equivalents for the example given, the connecting-rod being six cranks long or nearly 80 inches, we have

$$f = \frac{L^3}{h \times 24}.$$

If the depth of the connecting-rod be taken as 4½ inches, this

$$= \frac{80^3}{4{\cdot}5 \times 24} = 4700.$$

We see then that the stress due to the bending of the rod produced by its own weight only, reaches at this extreme velocity the high figure of 4700 lbs. when the piston is at nearly half stroke.

Further straining action occurs due to the piston load. The stress due to this, D being the cylinder diameter, and the breadth of the rod being 2 ins., is

$$\frac{0{\cdot}78\ D^2 \times 100}{b\,h} = \frac{0{\cdot}78 \times 19^2 \times 100}{2 \times 4\frac{1}{2}} = 3100 \text{ lbs.,}$$

or two-thirds that due to the bending moment. It appears, therefore, that the depth h of the rod should be determined by reference to the bending moment only, while the breadth should be regulated so that the stress does not exceed the values determined above.

For practical purposes it may be taken that the greatest bending moment occurs at the centre of the rod, and that the proper shape of the rod is that shown in fig. 82, where the greatest depth h is at the middle.

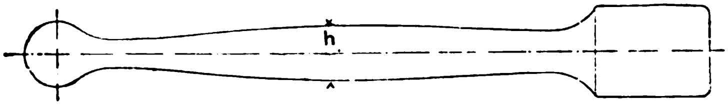

Fig. 82.—Shape of Connecting-rod.

Since $f = \dfrac{L^3}{h \times 24}$, and may safely be 5000 lbs. per sq. in.,

$$h = \frac{L^3}{120{,}000};$$

also when $b = \dfrac{D^2 \times 3000}{L^3}$ the rod will be of ample strength as a strut.

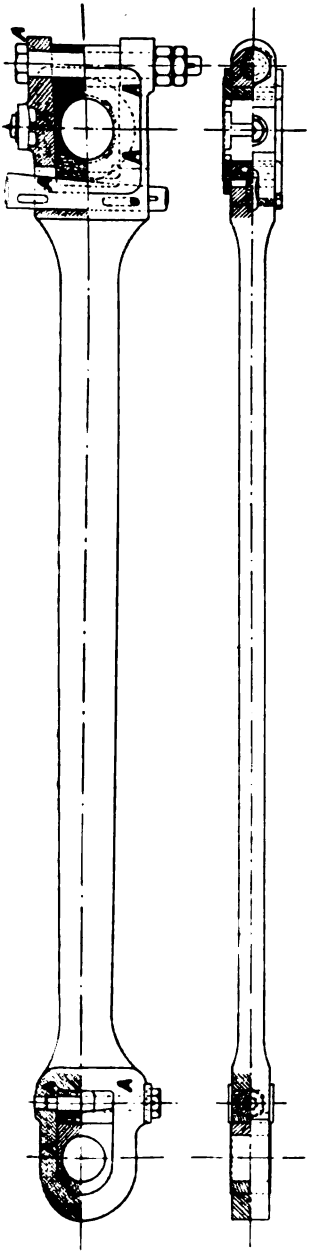

Fig. 83.—Open-ended Connecting-rod.

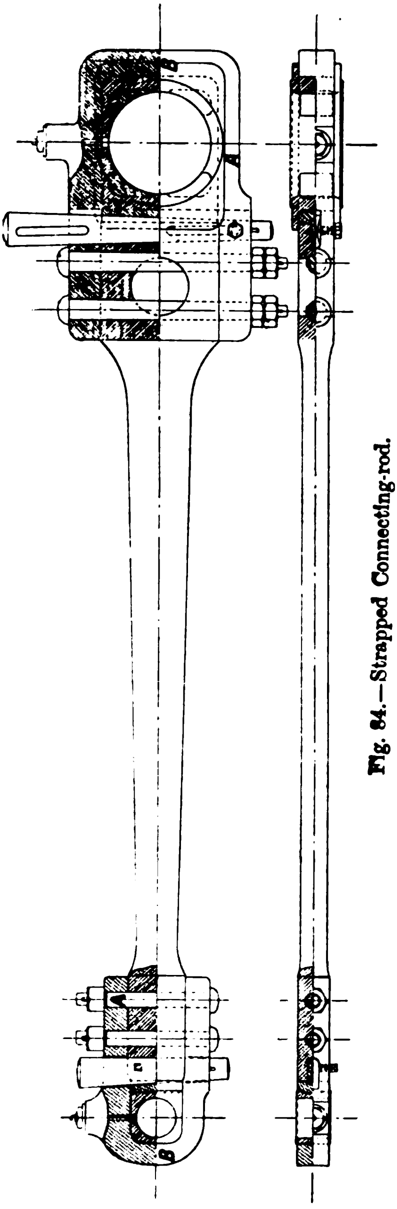

Fig. 84.—Strapped Connecting-rod.

CHAPTER VIII.

WHEELS AND AXLES, AXLE-BOXES, HORNBLOCKS, AND BEARING SPRINGS.

CONTENTS.—Wheel Centres—Axles—Crank-axles—Wheel Crank-pins—Wheel Tyres—Axle-boxes—Hornblocks—Bearing Springs.

A LOCOMOTIVE engine wheel consists of the *wheel centre*, *tyre*, *axle*, and *crank-pin*. The wheel centre is the portion of the wheel extending from the axle to the tyre, and comprises the *boss*, *spokes*, *balance weight*, and *rim*.

Wheel Centres.—The wheel centres were for many years made of wrought iron, and were composed of a great number of forgings welded together. These are still being produced, although during the last ten years cast-steel wheel centres have been taking their place. On two or three English railways wheels of cast iron are employed for goods and mineral engines with favourable results.

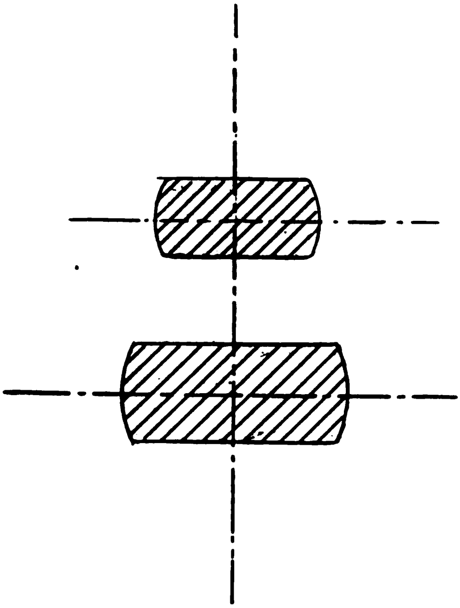

Fig. 91.—Spoke Section in Wrought-iron Wheels.

the rectangular section, rounded on the inside, employed in wrought-iron wheels. The dimensions are usually 1¾ ins. to 2 ins. thick, and 4½ ins. to 5 ins. wide. The rim of the wheel centre is turned accurately to gauge for the reception of tyre.

The thickness of the metal of the boss of the wheel round the axle is about one-half the diameter of the axle at the wheel seat. The crank-pin boss is an extension of the main boss, and is of about the same proportions.

The wheel centres are bored and turned, and are forced on the axle—before the tyre is shrunk on—by hydraulic pressure. The rule for this pressure varies, some engineers specifying not less than 80 tons, some going as high as 100 tons, without regard to the diameter. A good rule is 8 tons per inch diameter; or where *d* is the diameter of the axle at the wheel seat in inches 8 × *d*. Keyways are cut in the wheel bosses of all driving-wheels, but keys are not necessary for carrying-wheels.

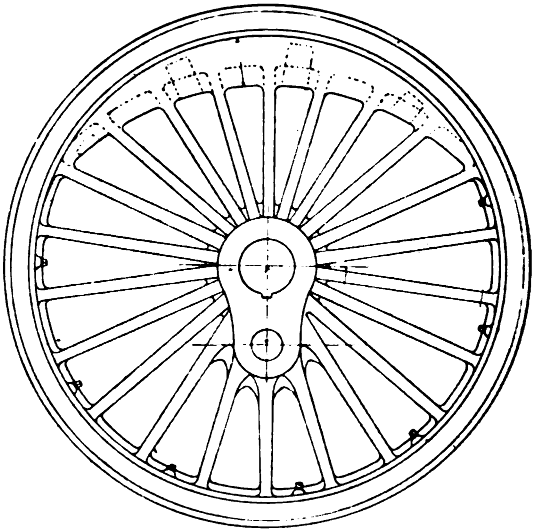

Fig. 93.—Wheels (cast steel) and Axle for Outside-cylinder Engine.

In wrought-iron wheels the balance weights are generally of cast iron, fitted between the spokes with a covering plate on each side. They are sometimes, however, forged solid; but this adds greatly to the cost. In cast-steel wheels the balance weights are cast in one with the spokes and rim, thus permitting the appearance of the wheel to be much improved.

Axles.—Axles are made both of steel and of wrought iron; the latter being the best Yorkshire iron, and sometimes having the journals case-hardened.

Taking d as the diameter of the journal, t as the thickness, and w as the width of the web, then $t w^2 = c d^3$; where c is a constant which may conveniently have the value $c = 1\cdot0$.

The crank-axle generally fractures through the inside web or across the crank-pin. Care should therefore be taken that these parts are made with sweeping curves where they meet. It is also a common practice for the webs to be hooped. For this purpose either wrought-iron welded hoops or solid rolled steel hoops (fig. 95) are employed; the latter being the neater.

The hoops should be made at least ¼ in. narrower than the web. If 4 ins. wide they are made 1¼ ins. thick, and if 3½ ins. wide they are made 1½ ins. thick.

The inside-webs are sometimes made thicker than the outside-webs which are nearer to the wheel seats. The inside-web in that case may be 5 ins. thick and 11 ins. or 12 ins. wide, and the outside-web 4 ins. or 4¼ ins. thick and 11 ins. or 12 ins. wide. Some cranks have both webs 5 ins. thick.

The forms of crank-axle webs now vary considerably. Some have rounded or circular ends, as shown in fig. 95. Elliptical webs are used on the Great Eastern Railway, and circular webs are used by Mr. Worsdell on the North-Eastern Railway. The latter form is illustrated in fig. 96. Crank-axles with circular webs are more easily machined, as the entire work on them, with the exception of the keyways, can be done in the lathe. They are also stronger, since the webs are very deep, and the thickness of the latter can therefore be reduced. This affords greater length for the bearings, the shortness of these being one of the drawbacks to the ordinary crank-axle of the locomotive. They are, on the other hand, rather more costly, more difficult to forge, and are of slightly increased weight.

The journals and the crank-pins are usually made of the same diameter as the body of the axle. This, as already mentioned, is 7 ins. or 8 ins. in engines with cylinders between 17 ins. and 19 ins. in diameter. The bearings of the coupled axles are made of the same sizes as those of the driving-axles.

Since the introduction of high pressures in marine engines, built up cranks have become general; but owing to the small sizes of a locomotive crank this mode of production has not as yet been found to present any great advantage in locomotive construction. Mr. Webb, of the London and North-Western Railway has, however, made a move in the direction of employing built-up cranks. Special tools and appliances are required for their manufacture, but with these there should be no difficulty in making these cranks. Hooping the cranks would not then be necessary, nor would there be any rounding of the corners at the ends of the crank-pins. The eccentric sheaves and middle are in such cranks turned from the solid, and the journals are all case-hardened.

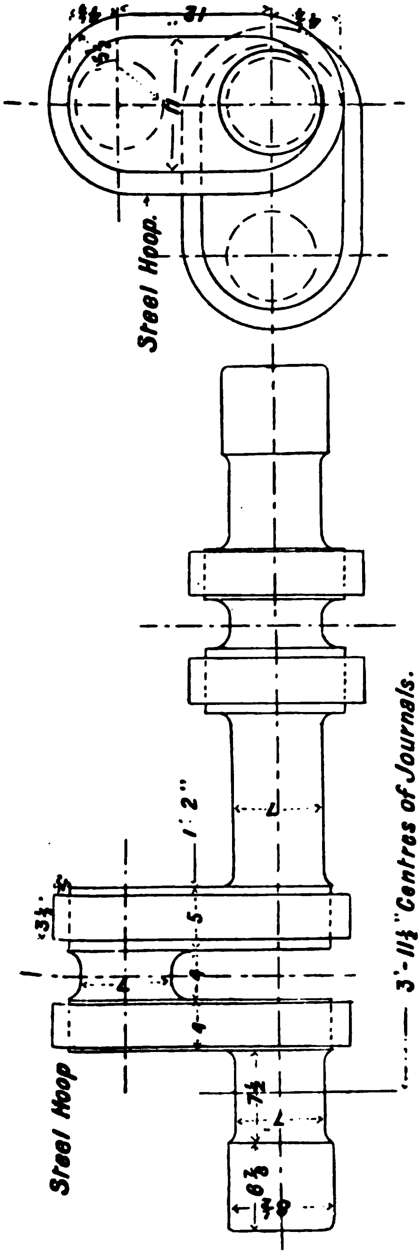

Fig. 95.—Crank-axle.

used for the purpose. The wheel centre is then dropped into the tyre, which shrinks on tightly as it cools.

Various qualities of steel have been made use of for wheel tyres, but it has been generally found to be more economical to use the best cast steel.

Tyres originally were made from 2 ins. to 2½ ins. thick; but 3 ins. and 3¼ ins. is now the thickness generally adopted, and 5½ ins. the width. Bogie tyres, however, in some instances are not more than 5 ins. or 5¼ ins. wide.

After the tyre has been shrunk on the wheel centre, it is turned to the exact form required. In this operation it is made slightly conical, the slope being 1 in 20, or ¼ in. in a length of 5 ins. The chief reason for this is to diminish wear and tear and resistance in going round curves. When traversing a curve in the track the outer wheel will run on its largest diameter and the inner wheel on its smallest diameter, thus reducing slip. In engines with six and eight wheels coupled the middle wheels have the flanges turned thinner than those of the leading and trailing wheels; and in some cases the flanges are removed altogether. The flanges usually project 1¼ ins. and are from 1 in. to 1¼ ins. thick.

There are many methods of securing the tyres to the wheels, many hundreds of patents having been taken out for designs having this for their object.

Fig. 97 shows the tyre secured to the wheel by a lip and a number of steel set screws 1 in. or 1⅛ ins. diameter, with 11 threads per inch, the set screws being placed one each in the alternate spaces between the spokes. Tyres are also fastened to the wheel centre by retaining rings similar to those used for many years on carriage wheels and known as Mansell's fastening. These rings are placed

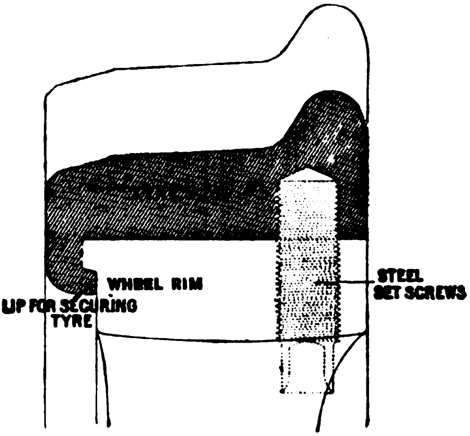

Fig. 97.—Wheel Rim and Tyre.

should be bored out slightly—say $\frac{1}{32}$ in. or $\frac{1}{16}$ in.—larger than the journal, so as to fit loosely at the sides, and should be $\frac{1}{16}$ in. shorter than the axle journal in order to give clearance. They should also fit closely over a quarter of the circumference at the crown.

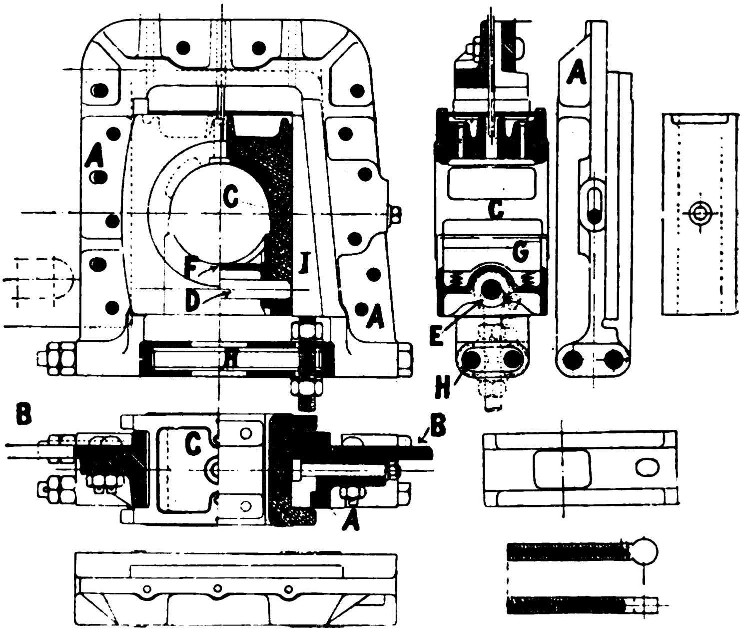

Fig. 99.—Brass Axle-box.

A Hornblock secured to engine frame.
B Engine frame.
C Brass axle-box from which is suspended by pin, D, the engine bearing spring.
F Keep.
G Lubricating pad.
H Hornstay.
I Adjusting wedge and screw.

The brass for a cast-iron, cast-steel, or wrought-iron axle-box (fig. 100) should be well fitted into the crown of the box. Sometimes such brasses are provided with strips for ensuring a good fit. The thickness of the brass at the crown should be $\frac{d}{5}$. A boss or squared projection should be provided at the top of the brass to fit in a recess in the axle-box. This being furnished, the brass is kept from moving, and flanges are not required.

The top of the axle-box is used as an oil reservoir, from which pipes sometimes pass through holes to a recess in the crown of the bearing. These are for lubricating the journal by means of *trimmings*. If this plan is adopted, a piece of $\frac{1}{8}$ sheet iron is required on the top to keep out all dust and dirt. As oil-boxes of this kind are difficult to get at, it is more usual to have an oil-box fixed on the side of the frame. In such cases the oil is conducted to the hole or holes in the axle-box by a copper pipe, the trimmings being in the oil-box. At the bottom of the axle-box is a light iron casting—the keep—about $\frac{1}{4}$ in. or $\frac{5}{16}$ in. thick. This is fitted into the axle-box, and in it is generally placed a lubricating pad, on which the oil runs from the journal. This pad is kept close to the journal by means of springs placed underneath it.

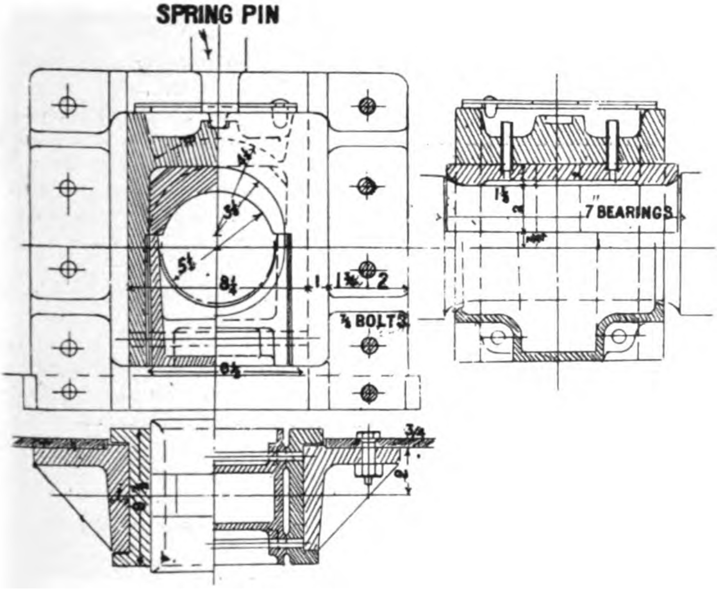

Fig. 100.—Cast-iron, Steel, or Wrought-iron Axle-box.

Hornblocks.—The hornblocks, or axle-box guides (fig. 99), are made of cast steel, or cast iron, or sometimes wrought iron case-hardened; they have also been forged solid with the engine frame, then having loose cheeks fitted to them.

It is usual now to make the top and sides in one piece and well flanged in order to stiffen the frames. The working faces are made wide to suit the axle-boxes, a side play of $\frac{1}{32}$ in. being allowed, as before mentioned, for driving, and $\frac{1}{8}$ in. for leading and trailing axle-boxes. The hornblocks, after the flanges have been planed all over, are fitted and secured to the frame by well-fitting turned bolts or rivets of about 1 in. or $1\frac{1}{8}$ ins. diameter, driven tight into holes properly rimered out.

Adjustable wedges (fig. 99) are much used on the driving- and coupled-wheels to take up the wear of the axle-boxes in the horns; the taper being 1 in 10.

Hornblocks forged solid with the frames were found to fail after some years, where the frame plates had been welded to the forging. *Hornstays* are carefully fitted to the bottom of the hornblocks or frames. These strengthen the frames where they have been weakened by the cutting of the gap to receive the hornblocks and axle-box. They also keep the hornblocks from springing, and assist in preventing the axle-boxes from twisting on the journals of the axle.

Bearing Springs.—Locomotive bearing springs are of various forms, distinguished as laminated, spiral, and volute.

Laminated or plate springs are generally used. In these, which are composed of a series of superposed steel plates, the top or back plate is the longest, and each plate in succession is shorter than the previous one until the centre is reached. At the centre the plates are held together and in position by a *buckle*. These springs must not merely be strong enough to carry the load, but must at the same time be flexible, and should work freely.

For engine bearing springs, the plates are from $\frac{3}{8}$ in. to $\frac{5}{8}$ in. in thickness, and vary in width from 3 to 5 inches.

The springs may be supported at the two ends and bear the weight at the middle, or may be supported at the middle and be movable at the two ends—*i.e.*, they may either be hung from the bottom of the axle-box, or may be fixed above the axle-box.

The following rule for the strength of springs is given by D. K. Clark:—

D = Deflection in inches per ton of load.
N = Number of plates.
L = Safe load on spring in tons.
B = Breadth of plates in inches.
T = Thickness of plates in sixteenths of an inch.
S = Span of spring in inches.

Then to find the deflection,

$$D = \frac{\cdot 14\, S^3}{T^3\, B\, N}.$$

To find the number of plates,

$$N = \frac{11 \cdot 3\, S\, L}{B\, T^2}.$$

To find the safe load in tons,

$$L = \frac{B\, T^2\, N}{11 \cdot 3\, S}.$$

The buckles of laminated springs are made of wrought iron. They should be a good fit, and to ensure this they are sometimes machined or slotted inside. They are then heated and shrunk on to the spring. In some cases a hole is drilled through the centre of each plate of the spring and a rivet is put in. To prevent the plates from shifting side or endwise they are nibbed and slotted. The length of a spring varies from 2 ft. 6 ins. to 4 ft. 6 ins. It is urged by some that a long spring rides easier; where such a length is possible a spring 4 ft. long gives excellent results.

The hangers are of wrought iron and are hung or fixed in brackets on the frame. They are attached to the ends of the springs, and are disposed so that the spring may lengthen or shorten as the weight comes off or on through irregularities in the road.

Compensating beams or equalising levers (see L^6, Plate I.) are sometimes used between the springs of the coupled wheels. In America this practice is almost universal. It is claimed that with this arrangement the engine rests on two points at the trailing end —where the centres of the beams are on each side—and the leading end on one point, the centre of the bogie or pony truck. The effect of the compensating beam, when the arms are of equal length, is to distribute the weight equally on the coupled wheels. The weight of the engine being supported at the centre of the beam, the weights transferred through the springs to the axles are equal—hence the term "equalising lever." Engines fitted with this arrangement ride much easier on uneven roads and with greater safety.

The compensating beams and cross-shaft are made of wrought iron. The hangers are of wrought iron or cast steel, and are attached to the frames by turned cold rivets of about $\frac{7}{8}$ in. diameter.

Spiral springs are much used as driving springs; they are made of rectangular or of special sections of steel, and have to be made to deflect a given distance with a given load. They are generally fixed in pairs in special harness suspended under the axle-box. An example of these is seen in Plate III., as fitted to the axle-boxes of the driving-wheels. The springs, A A, rest upon the plate B, suspended by the hangers C, from the axle-box. The engine frame bears upon the plate, D, which is supported by the springs.

CHAPTER IX.

BALANCING.

CONTENTS.—Inside-cylinder Single Engines—Inside-cylinder Coupled Engine—Outside-cylinder Engines.

IN order to prevent dangerous oscillations at high speeds it is necessary that certain parts of the mechanism of a locomotive engine should be properly balanced. The revolving or rotating parts if unbalanced produce by the action of centrifugal force shocks and blows on the rails and framing of the engine. Since centrifugal force increases as the square of the number of revolutions in a given time, the forces developed by the action of unbalanced revolving weights becomes at high speeds large in amount, and sufficient to produce unsteadiness in running. These forces may be practically neutralised if balance weights are introduced having the same moment referred to the centre of the axle as the unbalanced parts. Obviously, in order to make their effect exactly opposite to that of the unbalanced parts, such balance weights would have to be bolted or otherwise secured to the crank-shaft. In other words, we should have, as has been proposed, one set of balance weights fixed exactly opposite to the centre of the crank-pin, and another reciprocating oppositely and transversely to the connecting-rod. The objections to this plan are that the weights would be liable to shake loose, and that in many engines consideration as to space would prohibit its adoption. Furthermore, the motion of the reciprocating parts produces a turning moment or couple tending to twist the engine athwart the track. For steadiness in running this turning moment must be annulled by weights placed in such positions as to produce a turning moment equal in amount but opposite in tendency. In order to effectively secure this the wheels appear to be the most appropriate position for the counter weights.

The doubts which have been cast* upon the usual method of balancing have probably arisen from the carelessness with which many engines have been designed in this respect; too heavy balance weights often having been applied, and the error increased by the counterbalances having been placed in the wrong quadrant. The doubt as to the exact amount or proportion of the reciprocating parts which has to be balanced in addition to the rotating parts renders the problem well-nigh indeterminate; but long ex-

---

* See Discussion in *Engineering* in 1894-5, vols. lvii., lviii., and lix.

perience has proved that when one-half of the reciprocating parts—care at the same time being taken to have the other portion of the problem carefully worked out—is balanced, the results are very satisfactory indeed.

Inside-cylinder Single Engines.—For the weight of the parts to be balanced we must take

(wt. of unbalanced part of crank-webs + wt. of crank-pin
+ wt. of large half of con.-rod)
+ $\frac{1}{2}$ (wt. of small half of con.-rod + wt. of crosshead + wt. of
piston and rod).

Call this quantity *w*, and suppose we have to determine in the first place the position and amount of balance weights, W, for an inside-cylinder single-driving engine.

Let R = transverse distance between cylinder centres.
S = transverse distance between centres of wheels; or—for 4 ft. $8\frac{1}{2}$-ins. gauge—4 ft. 11 ins.
l = length of crank.
L = distance of centre of gravity of counter weight from centre of wheel.

Referring to fig. 101, and to that part of the engine shown in plan, it is obvious that the disturbing effect of the unbalanced moving parts of one cylinder will be divided between the wheels in

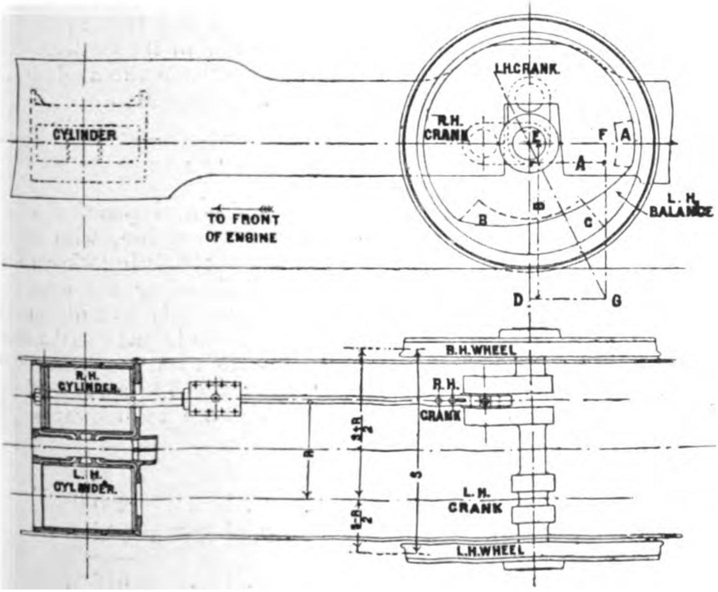

Fig. 101.—Balancing of Inside-cylinder Single Engine.

Inside weights, reciprocating parts—

Piston and rod, ...	262 lbs.
Crosshead, ...	212 „
Connecting-rod (small half), . . .	100 „
Total, . .	574 „

$$574 \times \tfrac{1}{2} + 516 = 803 \text{ lbs.} = w.$$

By formula (2)

$$W = \sqrt{A^2 + B^2} = \frac{803 \times 12}{1{\cdot}41 \times 32 \times 59} \times \sqrt{59^2 + 28^2} = 236 \text{ lbs.},$$

the weight of counter balance at 32 ins. radius. A segment having this weight is designed for the wheel, and its centre of gravity determined. This may be done by the aid of a small plummet and a piece of paper cut to the shape of the segment. Correction then can be made if the centre of gravity, as at first assumed, is found to be inaccurate.

For the position of the balance weight,

$$\tan DEG = \frac{S - R}{S + R} = \frac{31}{87} = 0{\cdot}35.$$

Inside-cylinder Coupled Engines.—The method of procedure in this case is best illustrated by taking an example. Let it be required to determine the weight, W, of the counter balances for an inside-cylinder engine, with cylinders 17 ins. diameter and 24-ins. stroke; the diameter of the coupled wheels being 4 ft. 10 ins. For a wheel of this diameter the centre of gravity of the balance weights would be very nearly at a distance of 18 ins. from the centre of the crank; also, $S = 59$ ins.; $R = 28$ ins.; $l = 12$ ins.

The inside weights are the same as in the preceding example; but note that formula (1) must be used, as correction must be made for the weight of the outside unbalanced revolving parts. The weights of these are as follows:—

Unbalanced part of crank boss and pin, .	130 lbs.
Half coupling-rod, ...	100 „
Total, . . .	230 „

By (1) $$A = \frac{wl}{LS} \times \frac{S - R}{2} = \frac{803 \times 12}{18 \times 59} \times \frac{59 - 28}{2} = 140 \text{ lbs.}$$

$$B = \frac{wl}{LS} \times \frac{S + R}{2} = \frac{803 \times 12}{18 \times 59} \times \frac{59 + 28}{2} = 392 \text{ lbs.}$$

From the weight of B correction must be made for the weight of

Revolving parts—

Half coupling-rod, ...	122 lbs.
Unbalanced part of crank boss, . .	180 „
Large half connecting-rod, . . .	200 „
Crank-pin, ...	40 „
Total, .	542 „

Reciprocating parts—

Small half connecting-rod, . . .	130 lbs.
Crosshead, ...	215 „
Piston and rod, ...	301 „
Total, .	646 „

Weight at 13 ins. radius to be balanced $= 542 + 646 \times \frac{1}{2} = 865$ lbs.

$$W = \frac{865 \times 13}{32} = 351 \text{ lbs.}$$

at 32 ins. radius, to be placed exactly opposite the crank.

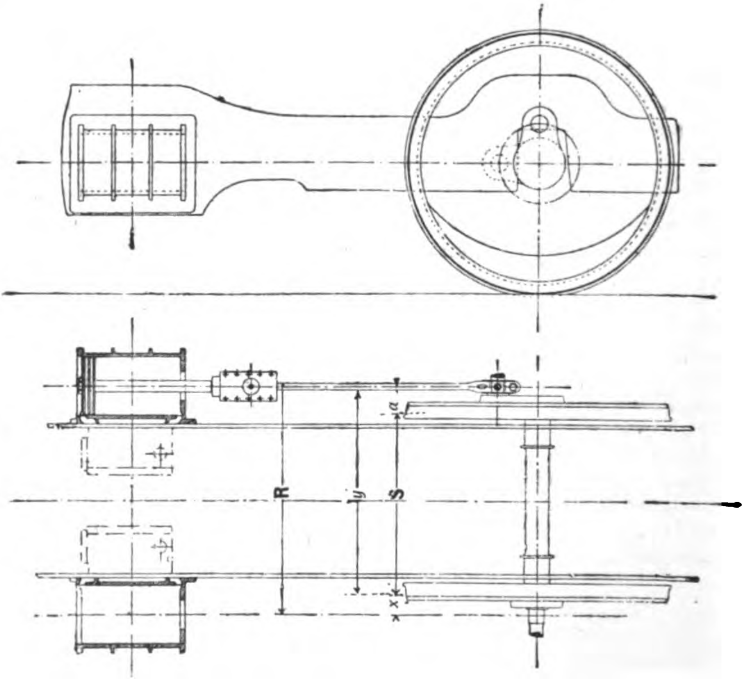

Fig. 103.—Balancing of Outside-cylinder Engine.

CHAPTER X.

VALVE GEAR.

CONTENTS.—Single Eccentric Valve Gear—Reversing Gear—Link Motions—Valve Ellipse—Centre of Reversing Shaft—Gooch's Valve Gear—Allan's Valve Gear—Radial Gears—Joy's Valve Gear.

THE motion of the slide-valve is derived from the driving-axle through the medium of the valve gear. The function of the valve gear is so to actuate the slide-valve that the admission and escape of steam, to and from the cylinder, will be effected in such regular and proper sequence, as to ensure the proper reciprocating motion of the piston.

Single Eccentric Valve Gear.—For simplicity we will first consider the motion due to the most simple form of valve gear, namely, that in which the valve receives its reciprocatory movement from a single eccentric, keyed to the driving-shaft or axle.

A gear of this kind would be non-reversible, and, therefore, not capable of application to a locomotive engine, which must, of course, be provided with a valve gear suitable for either forward or backward running. It is, nevertheless, necessary to consider the action of this simple non-reversing gear, for, as will presently be shown, the distribution effected by any kind of valve gear, with a given position of the reversing lever, is such, that a single fixed eccentric can be determined which would give very approximately the same distribution. This *equivalent* single eccentric, known as the *virtual* eccentric, thus affords a convenient aid in examining the actions of, and comparing, different gears.

In early engines the valves were arranged without lap or lead. A valve of this kind is shown in fig. 104. The eccentric throw, O B, is drawn full size, while the valve and crank, O A—which is on the back dead centre—are drawn to a smaller scale. The valve receives its motion from the eccentric-rod, indicated by the centre line B C. Evidently the slightest movement in either direction will open one of the ports for the admission of steam, and will place the other port in communication with the exhaust cavity.

In fig. 105 the crank has moved through an angle of 90° to O A, and the centre of the eccentric to B. Each port is now fully open —one to steam, the other to exhaust—hence

$$\text{Port opening} = \text{O B} = \text{throw of eccentric.}$$

In fig. 106 the piston has completed its forward stroke, and the valve has returned to its central position.

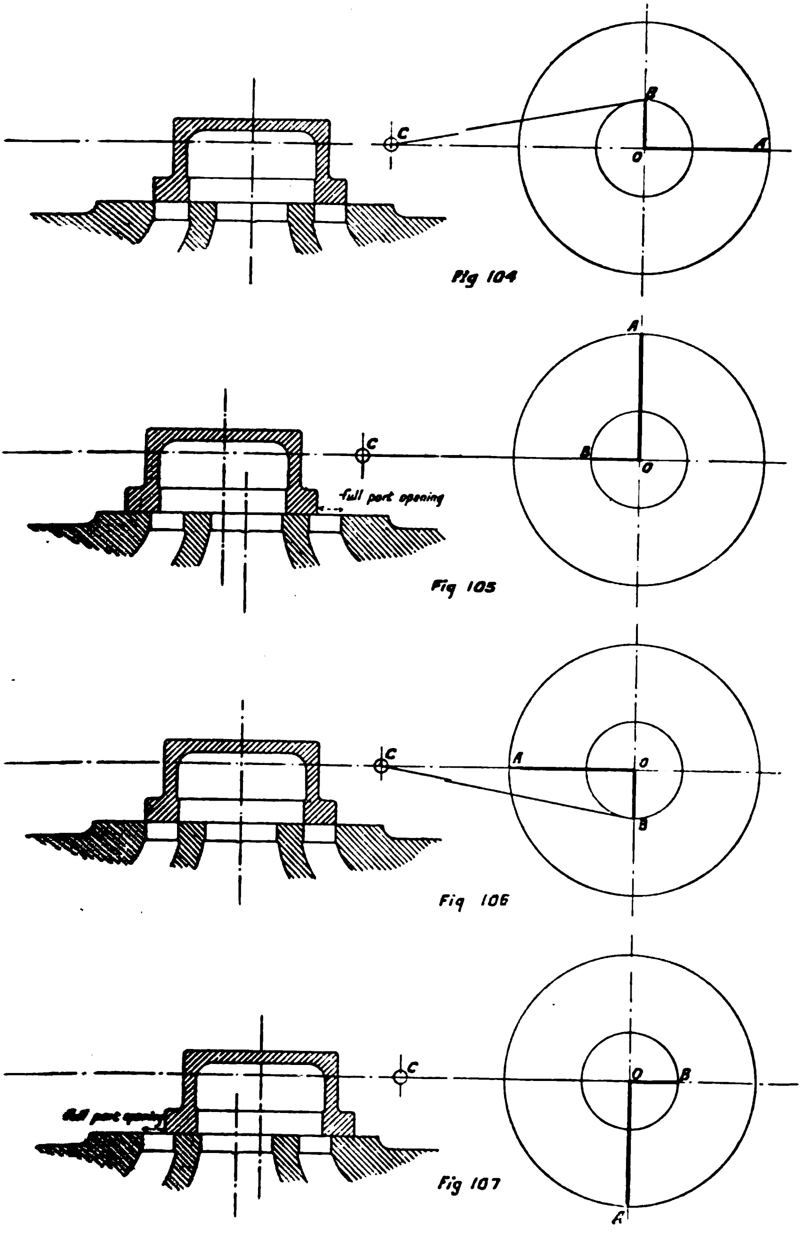

Figs. 104-107.—Slide-valve Diagrams.

Fig. 107 shows the valve in the position of full port opening for the front port. Further movement of the crank returns the eccentric to its original position, as in fig. 104.

When this arrangement was employed the steam was found to enter and leave the cylinder with difficulty. Consequently, it was found necessary, in order to avoid shocks at the ends of the stroke, to allow the valve to open the port for admission of steam a little before the piston reached the end of its stroke, or just before the crank reached the dead centre. This is called giving the valve *lead.*

Further, in order to utilise the expansive force of steam, the valve must close the steam port before the piston reaches the end of the stroke. To accomplish this the valve must be provided with *lap.*

In fig. 108 the valve has been extended on each side by the amount O D, the *lap.* To this extent it overlaps the steam ports when in the central position. The valve and the centre of the eccentric have, however, been moved forward by the amount O D + D E, the lap and lead, as compared with its position in fig. 104, and the eccentric has been advanced through the angle B O B′. In future we shall refer to the angle B O A, by which the eccentric leads the crank, as the *angle of advance.*

If a line D B″ be drawn to cut the throw circle in B″ and B″OA′ be made equal to the angle of advance, A′ will be the position of the crank when steam is on the point of being admitted to the cylinder, the angle A O A′ is called the *angle of pre-admission.*

Fig. 109 shows the valve in the position for full port opening; the throw of the eccentric has been increased, for it is now

$$O\,B = \text{port opening} + \text{lap},$$

and not simply the port opening as before. If a line D B‴ be drawn, and the angle B‴O A″ made equal to B O A, then A″ is the position of the crank when steam is cut off. Fig. 110 shows the position of the crank and eccentric, and of the valve with the full lead opening at the front port, just as the piston is at the beginning of its stroke, while fig. 111 shows their relative positions at the moment of full port opening at that port.

The sequence of operations just described is usually called the *distribution,* while the various phases of the cycle, the admission, cut-off, release, and pre-admission are called the *phases of the distribution.*

Reversing Gear.—So far we have been dealing with eccentrics fixed so as to ensure forward running. When the crank (fig. 108) is at A, and the centre of the eccentric at B, the distribution, as we have seen, is such that motion must take place in the direction of the arrow 1, the valve, at starting, moving from right to left. If, however, we wish the motion of the crank to take place in the direction of the arrow 2, when the crank is at A, the valve must still move from right to left in order to open. Evidently then the valve must possible, the engine, whether running backward or forward, being always in full gear. The failure of the hook-ends to properly engage with the pin on the valve-spindle when the engine was reversed, was the cause of many break-downs. This gear was entirely abandoned for the invention of Howe known as the Stephenson link motion.

Link Motions.—The transition from the "gab" to the "link" appears now to be very simple, but some considerable time elapsed before this great improvement was conceived. Simple though the change was, it was one of the principal steps in the perfecting of the locomotive. Economy in coal consumption was at once effected by the introduction of variable and increased expansion, which the adoption of the link-motion rendered possible. At the same time the distribution was so much improved that really high-speeds became feasible. Although the link-motion has been long in use we are safe in saying that no reversing-gear has been introduced superior to it in all points; while, in respect to, at least, one vital condition, that of durability, it probably surpasses them all.

Fig. 113 shows the application of the link motion to the London and South-Western Railway outside-cylinder express engines. The link is suspended from an arm on the reversing shaft, and is shown in the mid gear position. As by an adjustment of the reversing shaft it is moved down, the slide block is brought more under the control of the forward eccentric, the motion of the valve then being such as to ensure forward running. When the link is raised the slide block is brought under the control of the backward eccentric, and the motion of the valve is then such as to ensure backward running. In each of the extreme positions the link is said to be in "full gear," either "forward" or "backward."

In fig. 114, the centres of the link motion are drawn in full lines for the mid gear position, with the crank on the back dead centre. The valve has moved forward from its central position the distance *c*, by which the centre of the eccentric is in advance of the centre line of the axle; also, by reason of the angularity of the eccentric-rod, it may be said to have lost an amount of advance equal to a; and the curvature of the link has caused the valve to be further advanced by the distance *d*. The net movement exceeds the lap by the mid gear lead. Hence

$$\text{lap and lead in mid gear} = c + d - a.$$

If r = radius of link and the length of the eccentric-rods; and x = distance of the centre of curvature of the link from the centre of the axle, evidently from the figure:—

$$r + x = r + c + d - a.$$

$$\therefore \qquad x = c + d - a = \text{lap and lead.}$$

In other words, the centre of the radius of the link must be located

Further, with such angles of advance as are usual in practice the half travel of the valve in mid gear cannot exceed the amount of the lap and lead. If the crank moves through a small angle, α, from its position at the dead centre, as shown in fig. 115, then the horizontal component, A, of the travel of the backward eccentric must

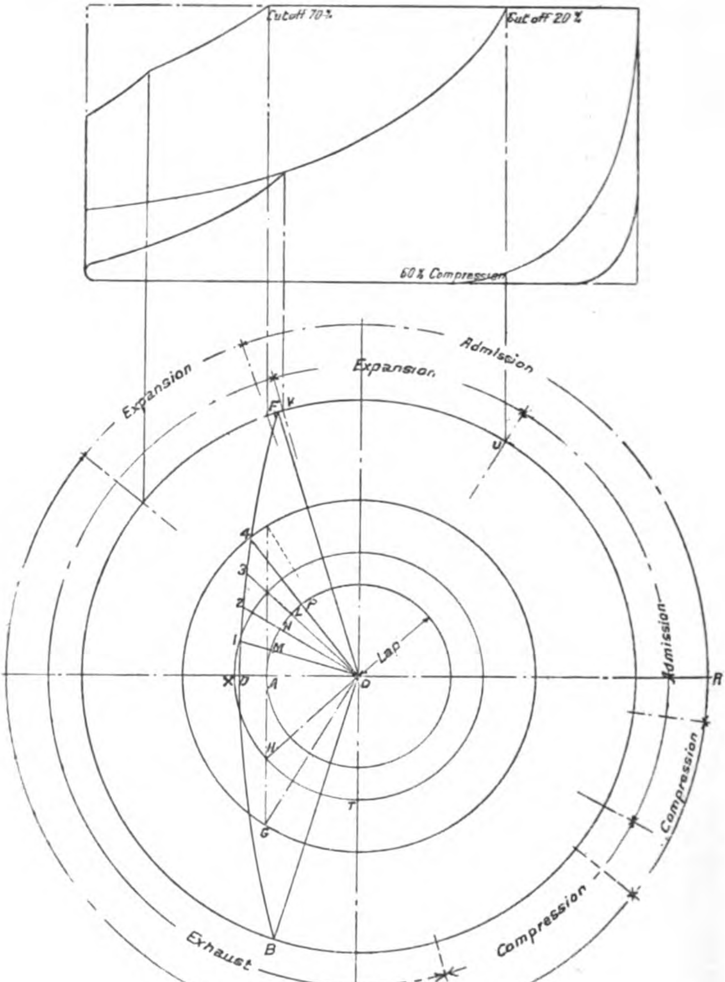

Fig. 116.—Action of Link Motion.

piston and when compression begins on the exhaust side. Hence, the theoretical indicator diagrams can be drawn as shown.

Having made an approximate determination of the centres of the gear in this form, the various positions assumed by the centre line of the link during one revolution and for each position of the block in the link may be ascertained. Fig. 117 shows the result of this process for one position of the block. Evidently this determination for all positions of the block is a tedious operation. It is safer and quicker to arrange the gear on a full-sized model, and, after trying the motion over, to make such alteration as may be considered necessary to effect a correct distribution.

Fig. 118 shows a simple form of model board mounted upon a large frame of wood. In this the two eccentrics are adjustable both as to throw and advance, and the lengths of the valve-rod, eccentric-rods, lifting-links, and connecting-rods are also adjustable. The centre of the reversing shaft can also be fixed in any suitable position. The valve is drawn upon the prolongation of the valve-rod while the ports are drawn upon the frame of the model. The spindle carrying the eccentrics passes through the board and has fixed to it at the back the crank and connecting-rod—both adjustable—by which a movable portion of the board is made to reciprocate. A cord attached to the "valve" and passing over pulleys reciprocates a pencil transversely to the latter. When these adjustments are arranged to suit the centres of the provisionally determined gear under consideration the gear is "tried over" and the "results"—*i.e.*, the leads, points of cut-off, and other phases of the distribution—are noted. Upon the suitability and general accuracy of these results or otherwise will depend the alteration or retention of the centres of the gear as at first arranged. After the first trial slight alterations in the centres of the gear may be necessary. Thus, for instance, if the valve is set with equal leads the cut-offs may not be quite equal, and an alteration to the centre of reversing shaft will be necessary. If the cut-offs occur too late then more lap and angular advance are requisite. Or, again, if the leads be too small, then more advance must be given to the eccentrics. A tabular statement exemplifying the action of a link-motion is given on p. 156.

So far we have not considered the effect of angularity of the eccentric-rods. When the valve is actuated by a single fixed eccentric this angularity produces serious inequality in the cut-offs; but in the link-motion, with ordinary lengths of rods, the point of suspension can be so chosen as to practically neutralise the irregularity arising from this cause. For this reason we have not in Fig. 116 made any correction on this account.

In some drawing offices extreme accuracy as to the cut-offs is insisted upon. This appears to be unnecessary labour when it is remembered that, although the gear may be arranged upon the model to have equal leads and cut-offs, to ensure the same results in working, the valve will probably have to be set with unequal

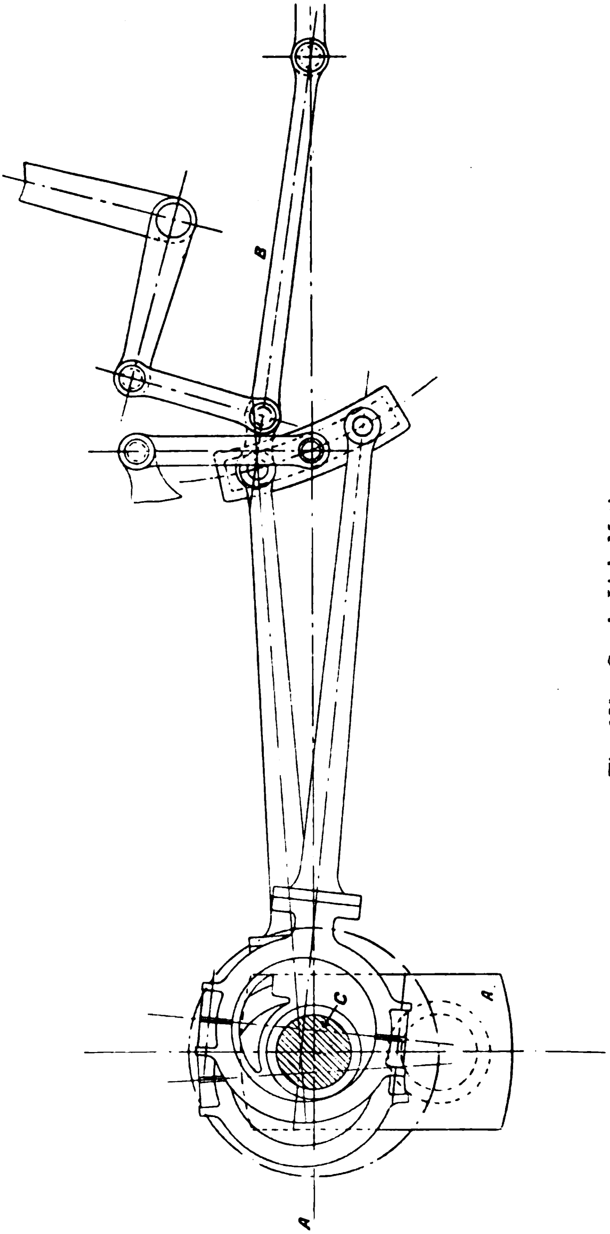

Fig. 120.—Gooch Link Motion.

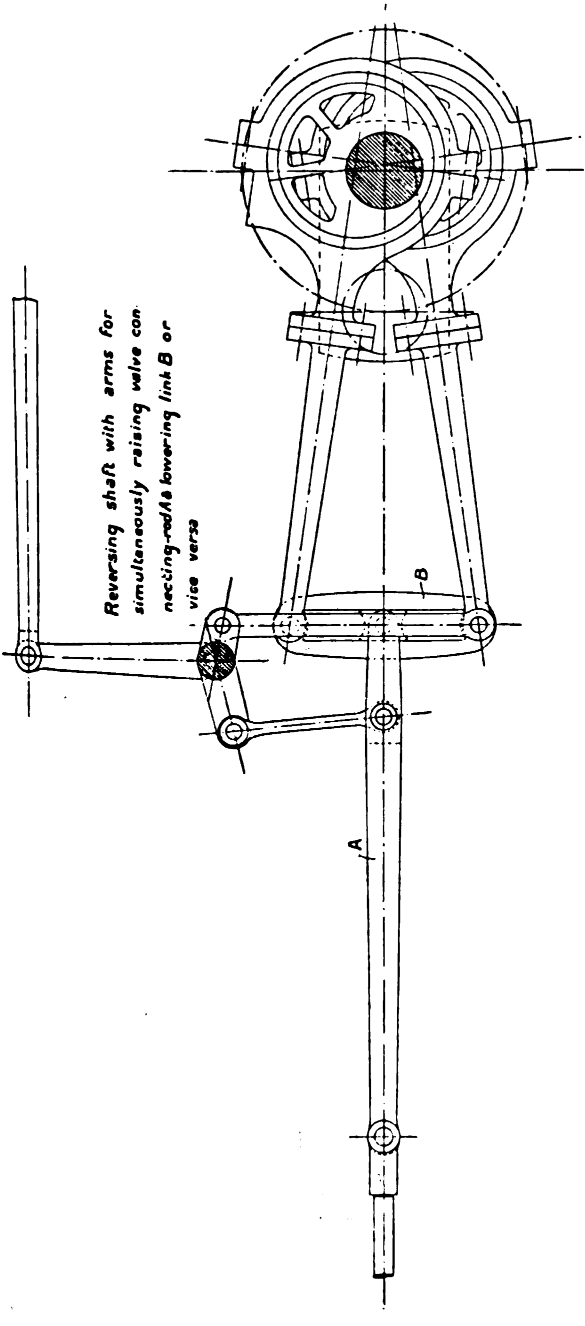

Fig. 121.—Allan's Straight Link Motion.

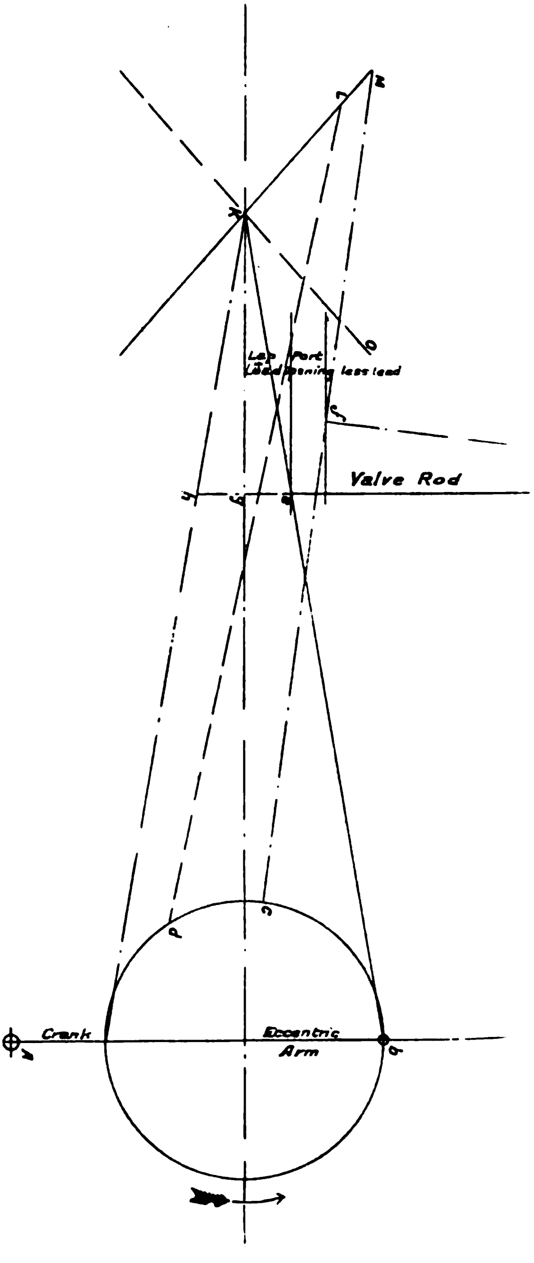

Fig. 122.—Hackworth's Valve Gear.

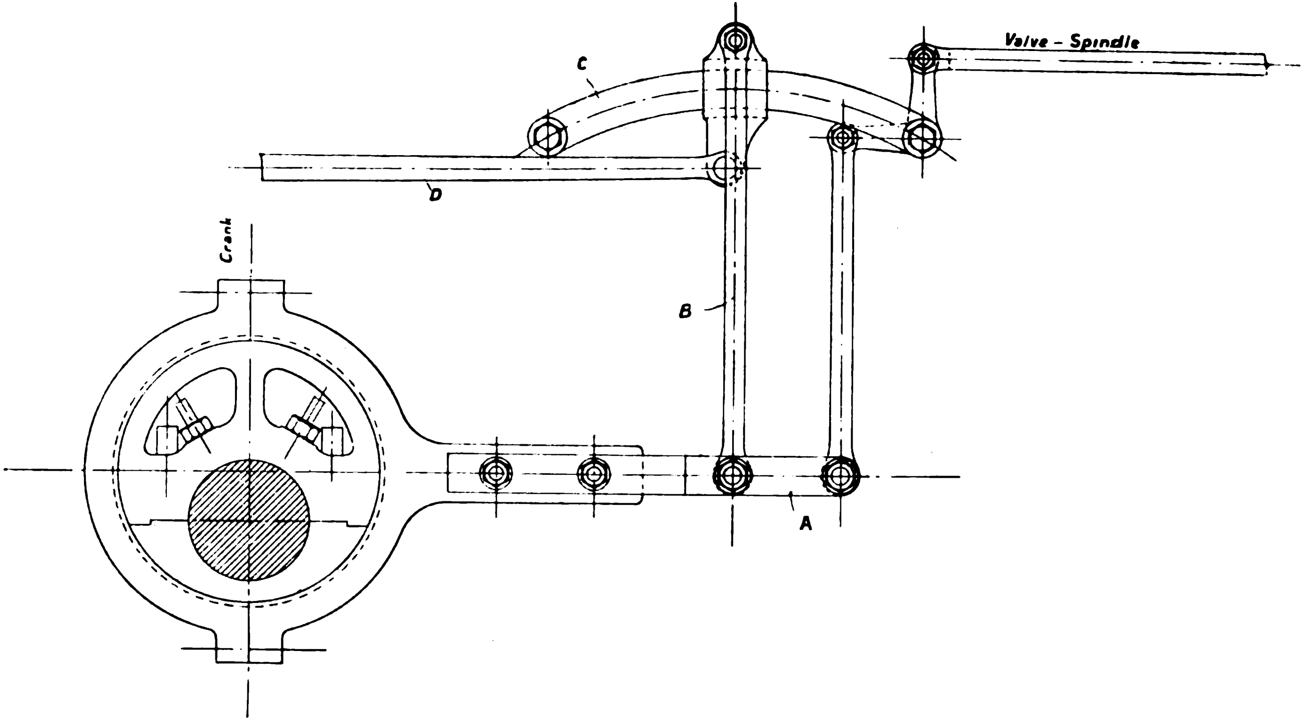

Fig. 123.—Hackworth's Gear as applied to Locomotives.

A, Radial rod or floating lever; B, link constraining a point in lever A; C, guide on which pivot block of link B can be shifted for varying expansion or reversing; D, to reversing screw or lever.

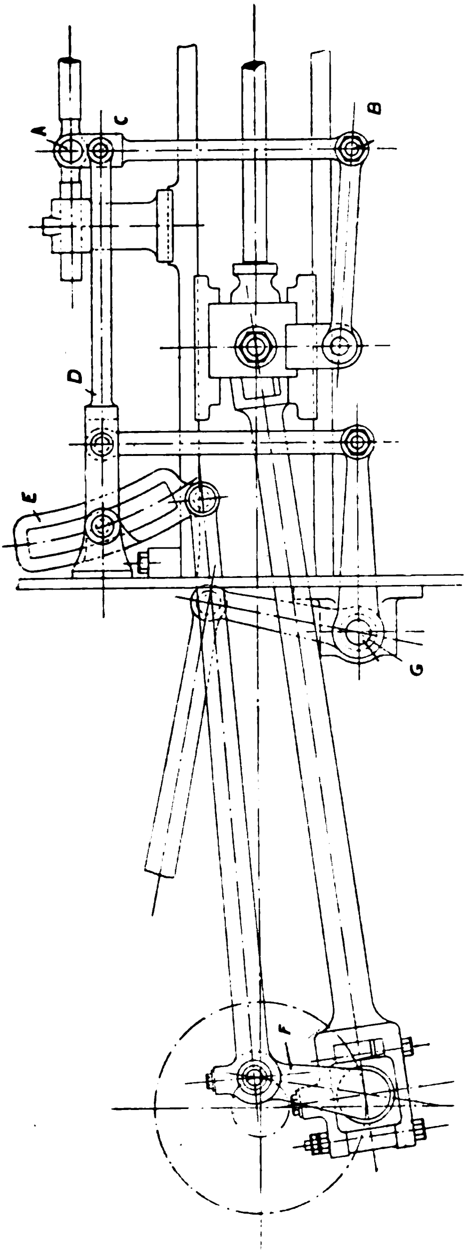

Fig. 124.—Walschaert's Valve Gear.

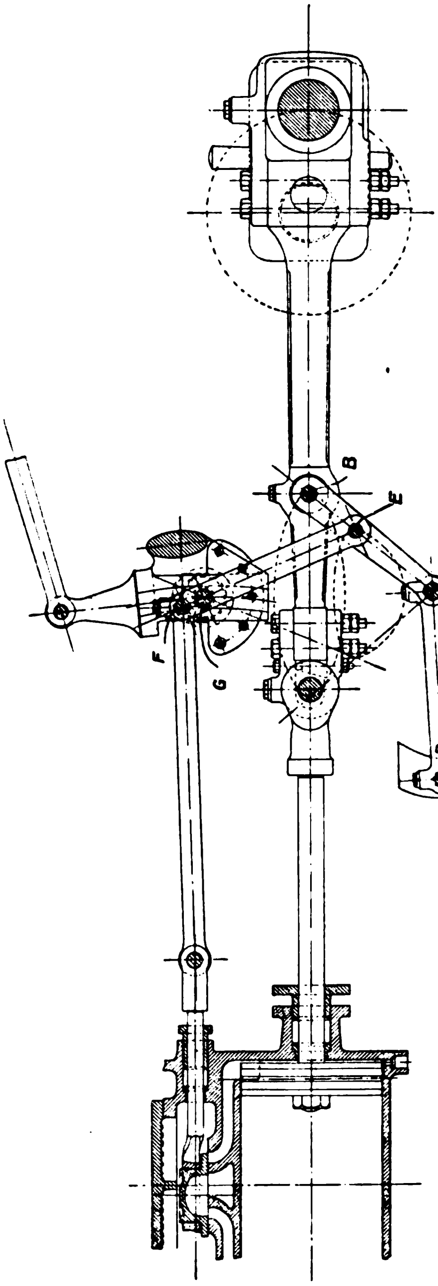

Fig. 125.—Joy's Valve Gear.

of the crank from dead centre to dead centre travels through a distance equal to twice the lap and lead, in addition to which, owing to the vertical movements of the points B and E, its centre, G, moves along the curved slide so as to determine the port opening. Reversal is effected by moving the curved slide. Since this movement does not affect the first-named component of the motion of the lever E G, it follows that the leads are fixed.

Hence the problem to be solved in designing this gear is to choose such a position of B that (1) the travel of the end of the lever E G will equal twice the lap and lead, and (2) that the vertical vibration of the point G along the slide will have the effect of imparting to the valve sufficient movement to give the desired port opening.

When G has reached its highest point in the slide, and commences to return, both G and F act together to produce a quick cut-off. The rise and fall of the axle relatively to the engine frame under the action of the springs affects the distribution with this gear to some extent. The same may be said as to inevitable wear at the joints, which are more numerous in gear of this kind than in the case of the link motion.

CHAPTER XI.

SLIDE VALVES AND VALVE GEAR DETAILS.

CONTENTS.—Slide Valves—Proportions of Slide Valves, Buckles, and Spindles—Allan or Trick Valves—Balanced Slide Valves—Intermediate Valve Spindles—Expansion Links—Reversing Shafts—Steam Reversing Gear—Eccentric Sheaves—Eccentric Straps and Rods.

Slide Valves.—The distribution of the steam in the cylinders is effected by means of slide valves, which, in the great majority of locomotive engines, are unbalanced. Fig. 126 shows the form of

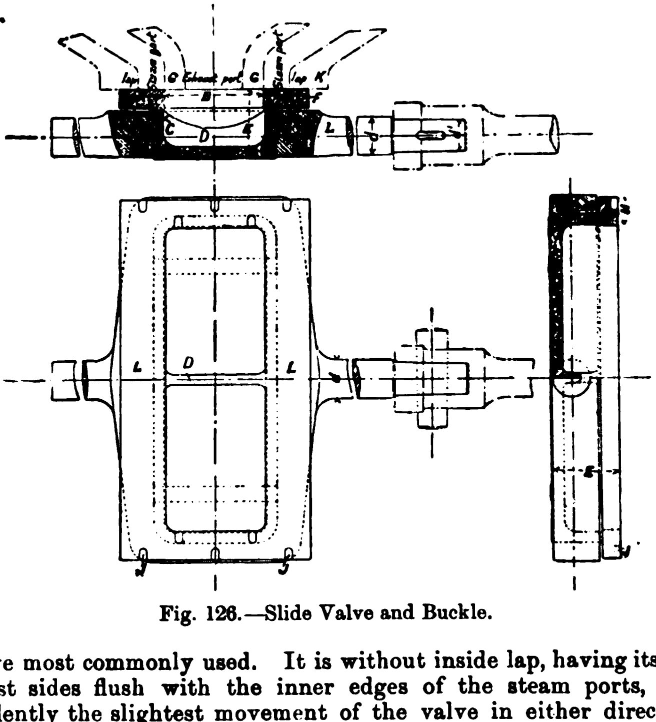

Fig. 126.—Slide Valve and Buckle.

valve most commonly used. It is without inside lap, having its exhaust sides flush with the inner edges of the steam ports, and evidently the slightest movement of the valve in either direction from its central position will place either the back or front steam locomotives, but they are not now used to any extent. Fig. 127 shows this form of valve; the principal feature being the extra steam port, A. When the valve has travelled by the amount of its lap from the central position and the edge, B, is on the point of admitting steam to the cylinders, the edge, *a*, of the extra port A is also on the point of opening to steam. For a given travel of valve, therefore, the port openings and leads are doubled as compared with those obtained from the form of valve shown in Fig. 126. But in locomotives where the leads must be made small in amount a very slight error or want of adjustment in the working parts of the motion affects the distribution very seriously when this form of valve is used, and may even destroy the lead of the valve entirely.

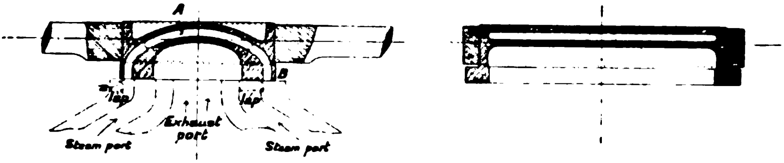

Fig. 127.—Allan or Trick Valve.

Balanced Slide Valves.—The problem of removing the pressure from the back of the slide valve has long engaged the attention of engineers. Piston valves and rectangular or D slides provided on the back with packing rings have met with considerable success in marine engine practice. It should be noted, however, that in marine engines the valves are often of enormous dimensions as compared with those of the locomotive, and that marine engineers have not to deal—as in the case of a locomotive—with the possibility of a down draught through the exhaust pipe and from the smokebox. This, when it occurs, carries with it fine smokebox cinders which cut the valve faces and play havoc with the packing rings of balanced valves. In every locomotive, especially when running at high speed with steam shut off, the piston as it recedes leaves a vacuum behind it which causes an inrush of the hot gases from the smokebox. This inrush may be minimised to a great extent by throwing the reversing lever into full gear as soon as steam is shut off. But the wear of valve faces is, nevertheless, due in great part to the particles of grit thus introduced getting between the valve and its face. Balanced valves are peculiarly liable to injury from this cause, and this, coupled with the fact that the varying travel of the valve renders it difficult to keep the packing rings tight, goes far to prove that the benefit to be derived from the use of balanced valves is small in amount and may not compensate for the extra cost of maintenance. Under any circumstances means must be provided for destroying as far as possible the back draught set up by the piston when steam is shut off.

Fig. 128 shows a good form of balanced valve with two packing

Fig. 128.—Beattie's Balanced D Valve.

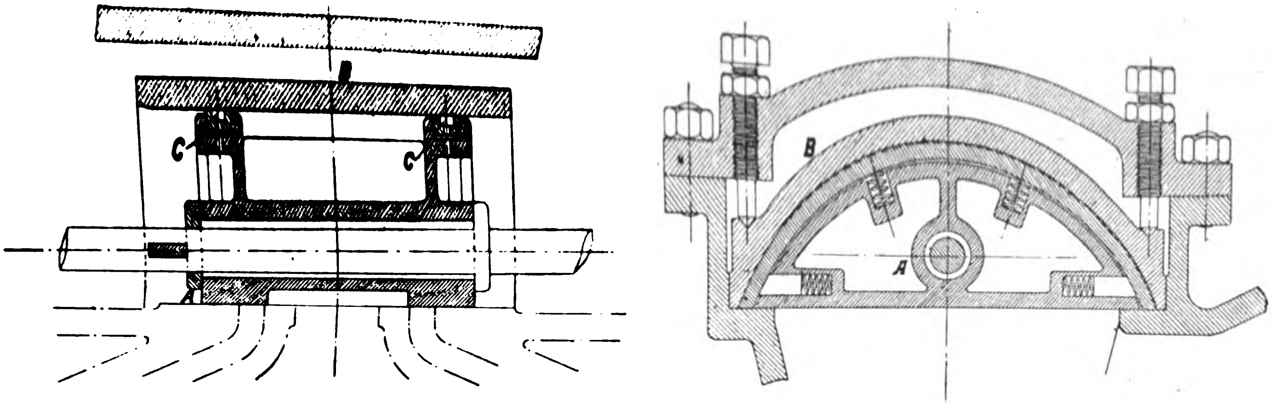

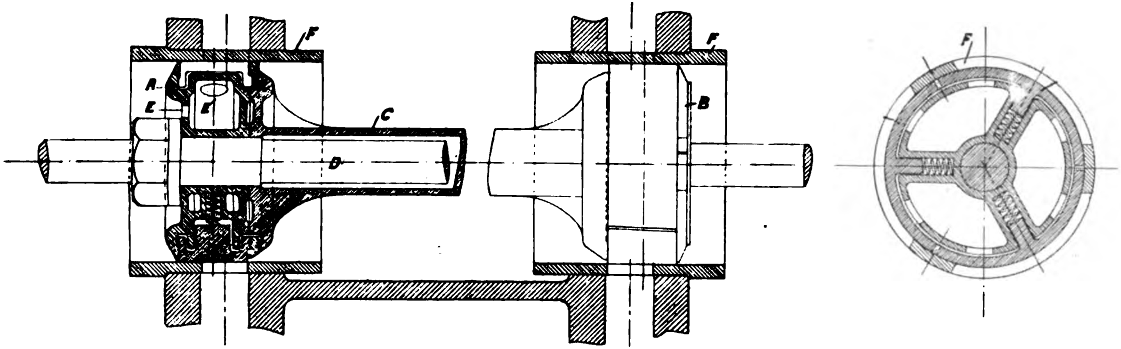

Fig. 129.—Smith's Piston Slide Valve.

rings used by Mr. Beattie on the London and South-Western Railway as long ago as 1871. These valves were made of hard cast iron, and the packing rings were also of cast iron.

The valve, A, was similar in shape to the old D valve, but was arched or circular at the back. It worked inside a jacket, B, of similar form fixed in the steam chest. Steam was admitted behind the rings, C, which were grooved so as to reduce the surface in contact with the jacket. Many advantages were claimed for these valves. The reversing lever, for instance, could be moved quite easily with the steam on; there was less wear and tear than with the ordinary valve. There was also a saving both in first cost and in maintenance, as they are stated to have lasted six or seven years, and a saving in the consumption of fuel. The valves were, however, open to the objections that there was difficulty in keeping them steam tight in working, and that when an engine was running without steam down inclines or in stopping at stations the balanced valve, unlike the ordinary valve, was not raised from the working face, the engine consequently not running so freely with the steam off.

Fig. 129 shows the form of piston valve used by Mr. Wilson Worsdell on the North-Eastern Railway (Smith's patent). An automatic steam and air valve is provided for the purpose of preventing at any time the formation of a vacuum.

The piston heads, A, B, with a tubular distance piece, C, between them, are secured on the spindle, D, by nuts. They are packed by packing rings composed of three segments, which are pressed radially outwards by springs and by the pressure of the steam admitted through openings, E, E^1. The piston heads work in ported liners, F, F, their action being similar to that of the ordinary D valve.

These valves, in addition to being used for the compound locomotives of the North-Eastern Railway, are also used for non-compound locomotives on the Midland Railway.

In America ordinary clack valves have long been used in conjunction with piston valves. These clacks are made to open inwards into the steam chest, but so long as the steam chest is filled with steam the valve is kept on its seat. When steam is shut off, if a vacuum is formed, the clack lifts and allows air to enter.

Intermediate Valve Spindles.—Connection between the valve spindle and the expansion link is made by means of the intermediate valve spindle Fig. 130 shows the form used for the 7 ft. 1 in. expresses on the London and South-Western Railway. Fig. 131 shows a form used for inside-cylinder engines where there is not room to get one of such ample proportions as that shown in fig. 130. The diameter, d_2, is usually made equal to the diameter, d, of the valve spindle. The diameter, d_3, of the pin is also made equal to d in order to give ample wearing surface.

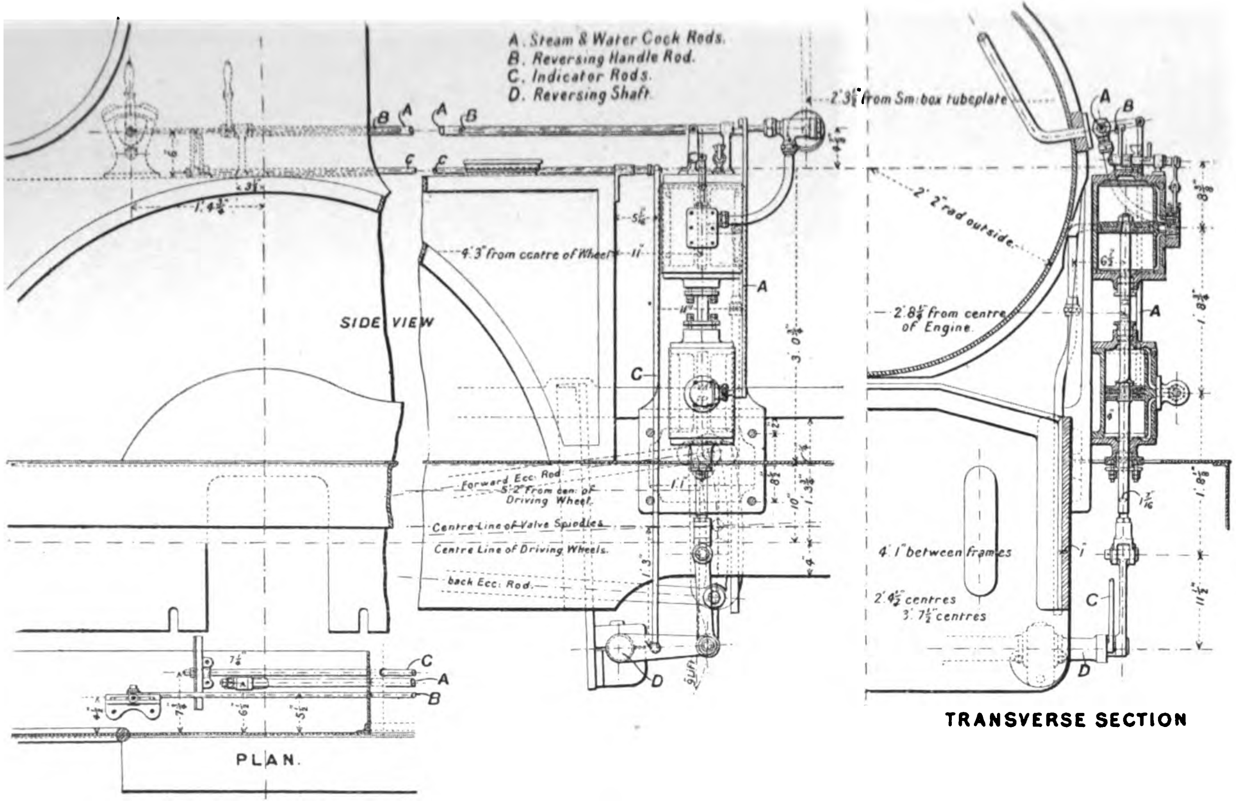

Fig. 135.—Steam Reversing Gear.

CHAPTER XII.

FRAMING; BOGIES AND AXLE-TRUCKS; RADIAL AXLE-BOXES.

CONTENTS.—Framing—Frames for Inside-cylinder Engines—Frames for Outside-cylinder Engines—Attachment of Boiler to Frame—American Bar Frames—Drawbars, Hooks and Chains—Buffers—Railguards—Bogies and Axle-trucks—Adams' Bogie—Stirling's Bogie—American Bogie—Bissell or "Pony" Truck—Radial Axle-boxes.

Framing.—In the first locomotives the boiler was the foundation upon which the engine was erected. The cylinders, axle-bearings, and motion were all fastened in some way to the boiler barrel, firebox, or smokebox.

After some years, frames—either inside or outside—were adopted, to which the boiler, axle-boxes, and motion were fixed, the cylinders being still fixed to the smokebox and boiler, and in one or two instances by brackets to the frames.

The forces due to the pressure of the steam acting on the ends of the cylinders and on the axle are considerable, and necessitate the provision of a frame to counteract the alternate compressional and tensional strains thus set up. The frame acts alternately as a strut and as a tie. The earlier locomotives, with the exception of the engines built by Bury who adopted inside frames with bearings between the wheels, had outside frames, the axle-bearings being beyond the wheels. The frame, besides aiding in the conversion of the steam pressure into tractive force through the turning of the driving-axle, also transmits the tractive force from the axles to the draw-gear.

The frames in Great Britain and Europe are of single rolled plates of iron or steel, generally the latter, to which are attached the cylinders, hornblocks, or guides for the axle-boxes, the cross-stays, and the buffer-beams or plates.

The thickness of the plates is generally 1 in. or 1⅛ ins. All the plates must be perfectly level and straight throughout. The holes should be drilled and rimered to the exact size, and each bolt and rivet should be turned to gauge, and fitted into its place so as to make a good driving fit. When the frames and cylinders are bolted together, and before the boiler, wheels, and axles are put in their places, the accuracy of the work must be tested by diagonal, transverse, and longitudinal measurement.

On several railways double—that is, both inside and outside—

carrying the slide-bars and valve-rod guides being rivetted to it. It is now generally made of the best cast steel, thoroughly annealed, ⅞ in. thick, planed to the exact width between the frame plates, and secured by ⅞ in. turned rivets countersunk and rivetted cold. The motion plate is properly faced or machined for the attachment of the slide-bars and intermediate valve-rod guides. In front of the firebox is another stay, E, formed of a steel plate 1 in. thick, and of the full depth of the frame. It is attached to the frame by angle irons on each side. For a tender engine, a cast-iron footplate, F, is accurately planed and fitted between the frames at the trailing end. It is fixed by countersunk bolts of 1 inch diameter, and has suitable holes drilled in it for the reception of the draw and safety-link pins, G, H.

For a tank engine there are employed, instead of the cast-iron footplate, two stays about 4 ft. apart, each similar to the one in front of the firebox. These are connected by a "box angle-iron," or rectangular frame made from angle iron, 3 ins. by 3 ins. by ⅝ in. This is planed on all four sides, and rivetted to the frame plates and to the two cross-stays. The trailing buffer-beam is of the same dimensions, and is fixed in the same way, as the leading one before mentioned. Some engineers still adhere to the wooden buffer-beams, generally of oak 5 or 6 ins. in thickness, and 16 to 18 ins. in depth.

Frames for Outside-cylinder Engines.—The frame plates of engines with outside-cylinders (fig. 140) are placed at a distance of, say, 3 ft. 11½ ins. apart. At the leading end is a buffer plate, A, of steel 7 ft. 11 ins. long, 1 ft. 7¾ ins. deep, and 1¼ ins. thick, which is rivetted to the stays, A′, A″, and angle irons on the inside and outside of the frames. In front of, and close to, the cylinders is a transverse angle iron, B, welded and squared at the ends. This is 4 ins. by 4 ins. by ⅞ in., and is planed to the exact width of, and rivetted to, the frames. Behind the cylinders is a steel casting, C, between the side frames, with suitable flanges 6 ins. deep, and underneath the cylinders is another strong steel casting, D. Both these are planed to the exact width of, and are rivetted to, the frames with ¾ in. rivets—pitched zigzag. The bottom casting is provided with a large boss, 7½ ins. in diameter, forming the trunnion on which the bogie turns and called the bogie centre-pin. Above the cylinders is a steel plate, E, 8 ft. 10 ins. long, with a flange 3 ins. deep and ¾ in. thick. This plate in part forms the smokebox bottom, and is an efficient stay for the front end of the frame. There are also three steel plate transverse stays, F, G, H, 1 in. thick, with angle irons on each side planed to the exact width and rivetted to the frames. One of these is situated about 3 ft. behind the cylinders and is made 2 ft. deep; another is placed about 1 ft. 3 ins. in front of the driving-axle and has a depth of 9 ins.; and the third is about 1 ft. 3 ins. behind the driving-axle and in front of the firebox and is 1 ft. 10½ ins. deep. At the trailing end is a cast-iron footplate, I, planed to the exact width of the frames and fixed thereto by bolts of 1 in.

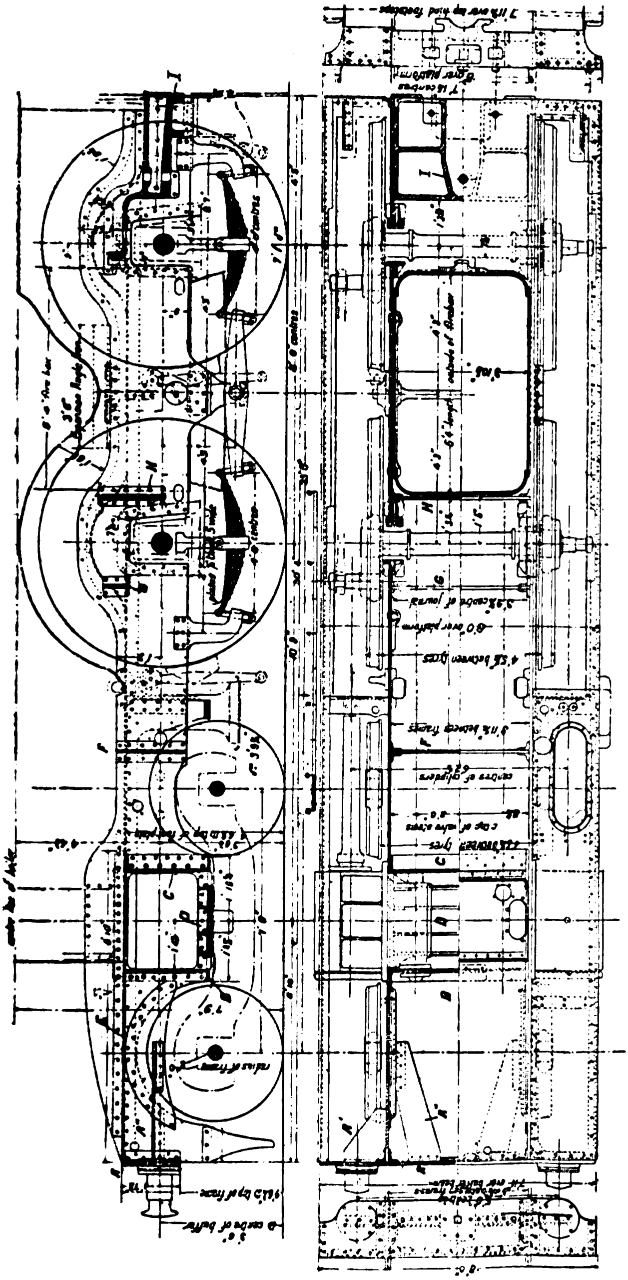

Fig. 140.—Frames for Outside-cylinder Engines.

and all rolling stock. In America the advantages of a flexible wheel-base were very soon realised, as it enabled roads to be laid through an undeveloped country at a low cost.

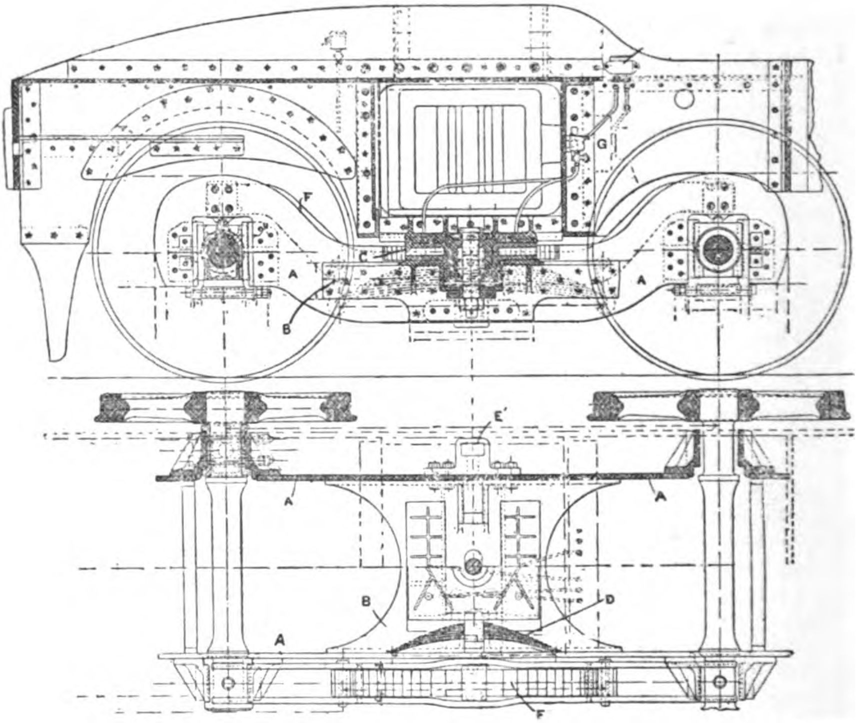

Fig. 142.—Adams' Bogie.

A	Bogie side frames.
B	Steel casting connecting side frames and supporting slide.
C	Slide through which passes bogie centre pin on engine main frame.
D	Controlling springs.
E	Bearing springs on which bogie frame rests through medium of brackets, E^1.
F	Cradle or beam resting at ends on axle-boxes and supporting bearing springs by hangers at ends.

Adams' Bogie.—Bogies built on the system adopted by Mr. Adams are used on several English railways, and overcome many of the objections found in other types. An example is illustrated in fig. 142. For the 7 ft. 1 in. and 6 ft. 7 ins. four coupled express engines of the London and South-Western Railway, the frame plates, A, are of steel, 1 in. thick and 14 ins. deep, and are placed 2 ft. $7\frac{3}{4}$ ins. apart. The axles and wheels are separated by a distance of 7 ft. 6 ins. from centre to centre. The side frames are firmly secured to a steel casting, B, planed to the exact width, by $\frac{3}{4}$ in. rivets pitched centre. The frames are secured firmly by a strong casting. On this rests a centre, through which passes a steel pin 4 ins. in diameter, round which the bogie swivels. Another pin, 4 ins. diameter, is passed through the bogie frame casting, and round this pin to right and left the bogie traverses, the movement to either side being ¾ in., or a total of 1½ ins. This pin and the centre pin passes through a strong arm 12 ins. centres, the centre pin at the same time passing through to radiating arms, controlled by india-rubber springs arranged diagonally; these are to keep the bogie in the normal position. The retaining bolts or arms are placed at an angle to lessen the amount of compression on the india-rubber springs for a given lateral movement.

It will be seen that this bogie both swivels and radiates; it works most satisfactorily, the motion being quite easy. To prevent the bogie from leaving the road, should the pin break, the cast-iron centre projects into the bogie beyond the point of rest.

American Four-wheeled Bogie.—The main part of the frame of the American bogie or truck (fig. 143) consists of a rectangular structure, A, composed of bars 1½ ins. to 2 ins. by 3½ ins. to 4 ins., welded together. This frame is about 8 ft. 9 ins. long and 3 ft. 9 ins. wide. The centre piece which carries the engine is attached to the frame by transverse bars, B; and two flat bars, C, 4 ins. by 1 in. and about 1 ft. 4 ins. apart, run from front to back. The centre piece, D, is suspended from the transverse bars by links so that it can swing or oscillate transversely. There is generally a centre pin passing through and fastened underneath by a cotter to prevent the engine from becoming disconnected from the bogie. The axle-box guides or pedestals are bolted to the lower surface of the rectangular frame. There is a cradle or equalising beam, E, on each side of the bogie, the ends of which rest on the top of the axle-boxes. Springs, F, on which the frames, A, rest, are attached to these cradles by hangers and pins at the ends. The axle journals are about the same size as on English engines, but the wheels are smaller—about 3 ft. in diameter.

Bissell or "Pony" Truck.—In America the "pony" or Bissell truck is much used for single axles. It consists of two ordinary axle-boxes sliding in guides attached to a short triangular frame situated with its apex towards the centre of the engine, and secured by a pin on the centre line.

On the goods locomotives of the American "Mogul" type on the Great Eastern Railway, pony trucks were fitted similar in design to those used on the Pennsylvania Railroad, shown in fig. 144. The wheels were 2 ft. 10 ins. in diameter. All the movements due to curves and inequalities in the rails were suitably permitted and controlled, and derailment was provided against by checks and chains which prevented the truck getting away from or athwart the engine. The main equalising lever under the leading end was a trussed beam, sustaining a load of about 12 tons on the centre. The top or compression member was a plain wrought-iron bar bearing against solid T-heads formed on the lower or tension member. The strut was represented by a block of cast iron, on which bore case-hardened segments secured by transverse bolts. The top fulcrum block had a bearing against, but was not attached to, a heavy box casting, which braced the cylinders and frames together. The hinder end of the main equalising beam had a bearing on a transverse beam taking the leading spring hangers of two springs placed above the axle-boxes of the forward driving-wheels. The front end of the main beam had a bearing through case-hardened

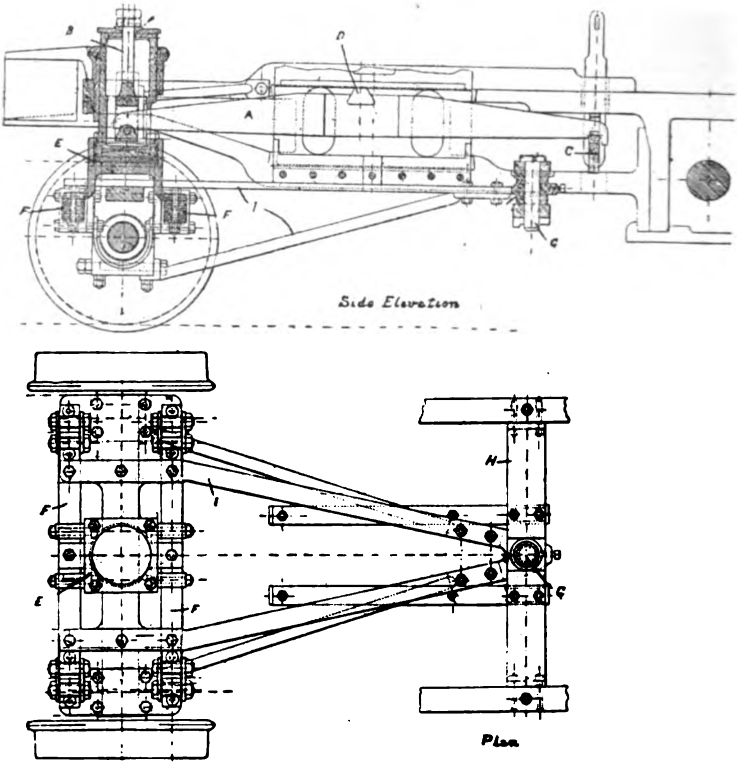

Fig. 144.—Bissell Truck.

A	Main equalising beam resting at front on hanger, B, supported by truck cradle, E, and at rear end on transverse beam, C.
C	Transverse beam supported at ends on hangers from leading ends of bearing springs on driving axle-boxes.
D	Fulcrum block on which leading end of engine rests.
E	Cradle carried on transverse plate springs, F.
G	Pin about which truck radiates carried by stays, H.
I	Radius bars of truck.

Radial Axle-boxes.—The radial axle-box is used on the London and North-Western Railway, the Great Eastern Railway, the North-Eastern Railway, and the London and South-Western Railway.

On the London and North-Western Railway the express engines built by Mr. Webb are fitted with radial axle-boxes at the leading end (fig. 145) and the tank engines have them fitted to both the leading and trailing ends. The axle-box is of cast iron and extends across the whole width of the engine frame between two curved guides. These are made of flanged steel plates $\frac{7}{8}$ in. thick, and are bolted to the main frames of the engine. Brasses for the two journals are fitted at the ends of the cast-iron axle-box. Under the axle and within a frame attached to the curved guides are two spiral springs $3\frac{7}{8}$ ins. outside diameter which are coiled right and left round a rod $1\frac{1}{2}$ in. diameter attached to the axle-box. As the axle-box slides laterally in the guides the spring on one side or the other is compressed. The movement of the box in either direction is limited to $1\frac{1}{4}$ ins.

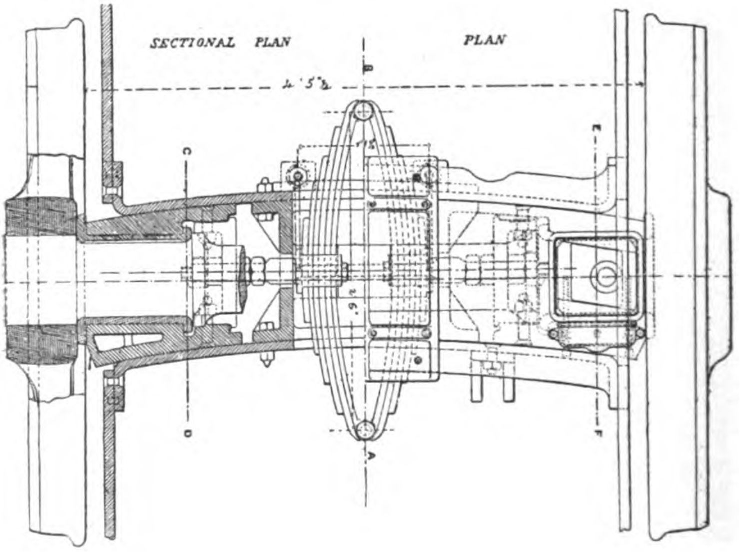

Fig. 146.—Worsdell's Radial Axle-box.

The radial axle-boxes designed by Mr. T. W. Worsdell (fig. 146) and used on the Great Eastern and North-Eastern Railways have stays, fitted to the guides, which carry an elliptical check-spring of four plates on each side. This acts very well and with perfect freedom. The spring is compressed against projections on the stay carrying it by pins attached to the axle-box and bearing against the buckle. The trailing springs through which the weight is transmitted to the axle-box have pins under the buckles which rest on a case-hardened table which slides on the top of the box.

Among the many objections to the use of the radial axle-box is the circumstance that it adds to the weight not carried by springs. But during the last few years nearly all the principal railways in England have had locomotives built with these axle-boxes.

Baldry's rule for finding the centre from which to strike the curve of a radial axle-box is as follows :—

$$x = \tfrac{1}{2}\left(a - \frac{b^2}{a}\right)$$

Where, as indicated in fig. 147, x = radius of the radial axle-box, a = distance in feet between centres of trailing- and radial-axles *plus* $\frac{1}{2}$ that between centres of trailing- and driving-axles, and $b = \frac{1}{2}d$, the distance in feet between the driving and trailing coupled wheels.

Take, as an example, one of the radial bogie tank engines of the London and South-Western Railway. The distance between the centres of the driving and trailing coupled wheels is 8 ft. 6 ins., and that between the centres of the trailing- and radial-axles is 7 ft. 6 ins.

Hence, $x = \tfrac{1}{2}\left\{11{\cdot}75 - \frac{(4{\cdot}25)^2}{11{\cdot}75}\right\} = 5{\cdot}1064$ ft.—say, 5 ft. 1 in.

The point, *c*, from which to strike the curve of a radial axle-box, according to the above rule, may be found geometrically by the method shown in fig. 147. The distance, *b*, is set off at right angles to *a*, and the hypothenuse is bisected by a perpendicular cutting off a portion of the base equal to the required radius. The correctness of the result is exhibited in the diagrammatic plan at the lower part of the figure. The tangent to the curve of the axle-box at the point A—that is, the direction of the axle when its centre reaches this point—is seen to meet the centre line of the rigid wheel-base at a point O which is the centre of the circular arc passing through A B C—that is, of the curved path which is being traversed.

In designing a boiler for a locomotive it is first necessary to know the size of the cylinders, and then the amount of heating surface and grate area necessary to supply steam uniformly and economically can be decided. In British practice, however, these relations are frequently neglected. The dimensions of the engine cylinders are first determined by the process described in Chapter iv., p. 84. Knowing the size of the cylinders, the heating surface should be determined; and from these particulars the boiler can be designed. The relation of heating surface to cylinder capacity is discussed on p. 87. It is difficult to establish a fixed ratio of grate area to cylinder capacity. A proportion sometimes recommended is 1 sq. in. of grate area to 4 cubic ins. of cylinder capacity.

The following are some examples of modern practice in English and American locomotives:—

TABLE XIII.—GRATE AREA AND CYLINDER CAPACITY.

Designation of Locomotive.	Ratio.	
	Cylinder capacity.	Grate area.
	Cub. ins.	Sq. ins.
London and South-Western Railway, . .	3·5	1
,, ,, ,, . .	3·25	1
Great Eastern Railway, ...	4·72	1
North-Eastern ,, ...	5	1
Great Northern ,, ...	5·574	1
Baldwin Locomotives, ...	2·68	1
,, ,, ...	4	1
Pennsylvania Railway, ...	3·55	1

From these particulars it will be seen that there is no uniformity in the construction of recent locomotive boilers. Each country follows its own custom, and each engineer adheres to his habits. Slow changes are, nevertheless, taking place. Thus the use of mild steel has a tendency to become general in the construction of locomotive boilers; rivetting by means f hydraulic machines has come practically into general use; but, on the European continent, copper still continues to be used for fireboxes, contrary to the practice in the United States and Canada, where steel only is employed; iron and steel tubes also are being substituted for brass tubes.

Fig. 148 is a vertical section of a locomotive boiler, and fig. 149 is a plan, partly in section, of the same. A is the firebox, B is the barrel, C, C the tubes—one at the top and one at the bottom only being shown—connecting the firebox, A, and the smokebox, D. E is the dome, F the foundation ring between the inside and outside fireboxes, G the firehole ring, and J the roof bars. From this a general idea can be obtained of the outline of a boiler.

The barrel of this boiler is composed of two plates with butt joint, and solid rolled steel ring shrunk on and double rivetted, as shown in fig. 150. The back plate of the outer firebox shell is flanged and double rivetted, as shown in fig. 151, to the wrapper or top plate in the outer firebox shell. This plate is in one piece, and is double rivetted to the first length of barrel plate (fig. 152), and to

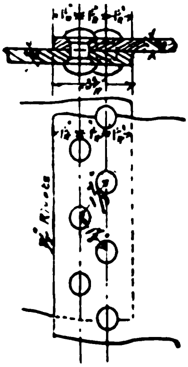

Fig. 152.

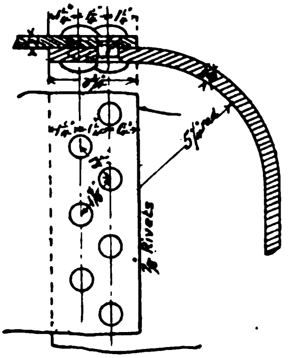

Fig. 151.

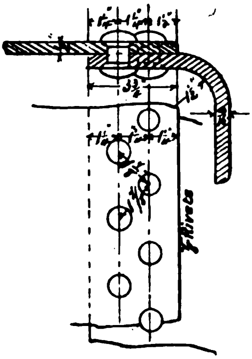

Fig. 153.

Details of Rivetted Joints in Locomotive Boilers.

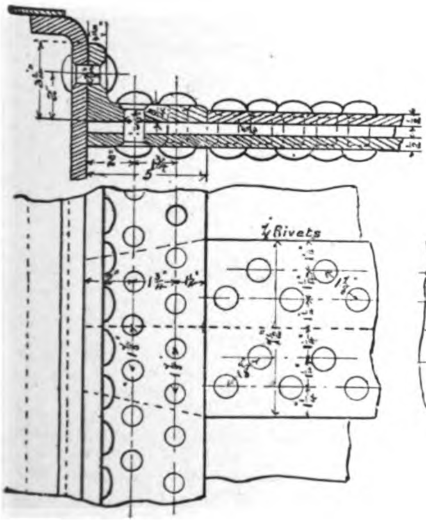

Fig. 154.

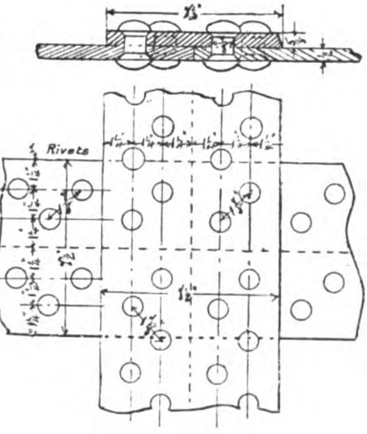

Fig. 150.

Details of Rivetted Joints in Locomotive Boilers.

together, and too close to the flange of the firebox tube plate, is the frequent cracking of the tube plates, some boilers requiring either half tube plates or new tube plates every year, or, at the least, once in two years. The spaces between the tubes should never be less than ¾ inch.

The Use of Steel in Boiler Construction.—The use of steel in the construction of locomotive boilers is being developed at the present time more and more. The principal reason that steel did not become generally used sooner, and that the first experiments, several years ago, did not always give good results, is that the metal used in the construction of boilers did not possess the necessary qualifications of good boiler plate. A metal of too hard a quality and not sufficiently ductile, which could not be properly worked, was employed.

Steel plates were formerly objected to on account of their want of homogeneity; not only did the quality of plates vary one from another, but there was also a difference in various parts of the same plate. These difficulties have now disappeared; we can obtain steel plates perfectly homogeneous.

The steel employed at the present time in the construction of boilers is a soft homogeneous metal somewhat similar to iron, bearing the name of ingot iron or mild steel. Its tensile strength is, on an average, 26 tons per square inch, with an elongation of 25 per cent. in 8 inches, or a resistance of about 18 per cent. greater than that of iron. with double the elongation.

This steel is preferably made by the Siemens-Martin process, the furnaces in this case having a basic lining and the result being more certain than with the Bessemer process. Numerous experiments and much discussion amongst engineers and naval constructors in England, appear to show that mild steel suitable for boilers is obtained from ingots produced by the Siemens-Martin basic process even when the ingredients contain phosphorus and are not relatively of good quality.

This metal cannot be tempered, but can be welded. It contains a maximum quantity of 15 per cent. carbon, and a minimum of 10 per cent.; it also contains a small quantity of manganese, which, in very small quantities, does no harm, but rather improves the quality of the steel. The proportions of sulphur, silica, and phosphorus in mild steel for boilers should be very small, as these are dangerous for plates exposed to the fire. This metal is of a more homogeneous texture than iron, on account of its mode of manufacture; iron having a fibrous texture and being occasionally laminated. Steel has the great advantage over iron of being equally strong length-wise and cross-wise.

A second consideration that retarded the use of steel was the occurrence of accidents to steel plates in the working of them in forming them for the boiler. Numerous cracks were produced in these operations; due, in the first instance, to the hardness of the metal; and, secondly, because it had been treated in the same way as iron.

Specification of Boiler Plate.—The material used for a locomotive boiler should possess great strength combined with the more essential quality of ductility. The greater the product obtained by multiplying together the numbers respectively denoting the strength and the ductility—which properly represents the work that the metal can furnish by variation of form without breaking—the more the boiler will be capable of resisting the various strains to which it is subjected under the various conditions of working.

The iron plates employed in boilers—generally of "best Yorkshire iron"—have a tensile strength of not less than 21 tons nor more than 24 tons per square inch, and are required to undergo an extension of not less than 10 per cent. in 10 inches; while a piece must be capable of being bent cold through an angle of 160° without showing any signs of failure at the heel of the bend. The steel plates now so much used in the construction of boilers have a tensile strength varying between 25 tons to 29 tons per square inch, with an elongation of 25 per cent. in 8 inches. The following is a very good specification for mild steel boiler plates:—

SPECIFICATION FOR STEEL BOILER PLATES.

The plates to be made of the best mild steel and of the exact dimensions, both as regards form and thickness, as given on the drawings or lists supplied.

Quality.—The quality of the material to be that generally known as mild steel plate, and to be free from silicon, sulphur, or phosphorus. The ultimate tensile strain that the plates will stand to be not less than 25 nor more than 30 tons per square inch, and to have an extension of not less than 23 per cent. in 10 ins. Every plate to be tested.

Manufacture.—All plates to be made in the most approved manner from ingots hammered on all sides, and when re-heated to be rolled truly to a uniform thickness. Both sides to be perfectly clean and free from pitting, roll-marks, scale, dirt, over-lapping, or other defects. Each plate to be taken from the rolls at a full red heat and allowed to cool gradually on a flat surface. Each plate is to be sheared to the dimensions given, and in no case to be sent out before being levelled sufficiently true for machining. All plates that are wavy or buckled, or in any way defective, will be rejected, and must be replaced by the makers free of cost. The maker's name and date of manufacture must be legibly stamped on every plate and not nearer the edges than 9 ins.

A sample or test plate at least 2 ft. square must be sent in by the contractor as a sample of what will be supplied in the plates to be made under this contract together with a complete analysis of the same. This test plate is to be ½ in. in thickness, and from it pieces will be taken for proving in the following manner.

Test.—A piece 6 ins. long will be bent over cold until the ends meet each other closely, and no fracture or sign of failure is to be observable in the heel of the bend. Pieces 3 ins. wide will also be taken and a ⅝-in. hole punched through same, which shall stand being drifted cold by taper drifts until it reaches 1¼ ins. in diameter without the edges fraying or showing signs of fracture.

Samples or shearings from the plates must be tested in the presence of the company's locomotive superintendent or his inspector, on the premises of the contractor, whenever desired.

Any question arising must be referred to the locomotive superintendent, whose opinion and decision are to be taken as final and binding.

Outside Firebox Shells.—In Great Britain the outside casings of fireboxes are generally of the Crampton type—*i.e.*, they are formed by the prolonging of the boiler barrel, as shown in fig. 148. The fireboxes being always deep, the lower portion of this casing is made narrow enough transversely to be placed between the engine frames as seen in fig. 157. As a rule a single wrapper plate forms the sides and crown, and to it the back and throat plates are flanged. The throat plate is also flanged to the boiler barrel. These plates are generally single rivetted, but owing to the recent increased pressures employed, they are, on one or two of the railways, double rivetted. This is a great improvement, not only on account of strength, but also because it altogether does away with any leaking.

In France, and other parts of the European continent, where there is a tendency to use firegrates of large area, and shallow fireboxes, uniformity of practice is not so great. Some of the outside fireboxes are of the Crampton type, some of the Belpaire type, and some with the cylindrical crown raised above the barrel of the boiler. In all the locomotives with the Belpaire type of firebox (fig. 155) the sides of the wrapper plate are connected together above the firebox by means of iron stays.

American engineers generally use firegrates of large area and shallow fireboxes, and they continue, except in some special cases, to design their boilers on the wagon top principle, which consists in uniting the wrapper plate of the outside firebox to the barrel of the boiler by means of a conically flanged saddle plate. This permits the super-elevating of the crown of the outside firebox, by which the steam space above the firebox is increased. At the lower part the firebox is made narrow transversely so as to pass between the engine frames.

We also find some examples of boilers with fireboxes of the Crampton type, also some examples of the Belpaire type—notably upon some express engines on the Pennsylvania Railway. Generally the outside firebox is made with two plates forming the sides, united by a plate forming the crown. This system has advantages—particularly in repair—as the wrapper plate need not, as when made in one piece, be cross cut when new sides are required.

Boiler Barrel.—In Great Britain the internal diameter of the boiler barrel is generally 4 ft. 2 ins.; this has been increased to 4 ft. 3 ins. in the locomotives of the London and South-Western Railway; in the compound locomotives, with single driving-wheels, of the North-Eastern Railway; in the compound goods locomotives of the Great Eastern Railway; and those of the Caledonian Railway. The boilers of some express locomotives of the London and South-Western Railway, built some years ago, are 4 ft. 5 ins. in internal diameter. The tubes are short compared with the lengths adopted in Continental and American practice. The majority of the boilers are, however, formed of three lengths of barrel plates; but the new locomotives of the London and South-Western Railway necessary for the passage of a man, and an internal strip rivetted to the plate compensates for the weakness produced by this opening. On one of the American railways the barrel plate is flanged upwards around the dome hole, and the dome is secured by rivetting to the flange in question.

Strength of Boiler Barrels.—By the ordinary rules for the strength of thin cylinders, we have:—

$P\,D\,p$ for the load on a strip of boiler barrel of width p

and $P\,D\,p = 2ft\,(p-d)$ for the tearing strength of the plates in both single and double rivetted joints. f = safe working tensional strength of plates.

Single shear,
$= 4d^2 \cdot 785 f$ the shearing strength of rivets in double rivetted lap joints; here f = safe working shearing strength of rivets.
$= 2d^2 \cdot 785 f$ for the shearing strength of rivets in single rivetted lap joints.

Double shear,
$= 4d^2 \cdot 785 f\ 1 \cdot 75$ for the shearing strength of rivets in double rivetted joints *with inside and outside butt strips.*
$= 2d^2 \cdot 785 f\ 1 \cdot 75$ for the shearing strength of rivets in single rivetted joints *with inside and outside butt strips.*

In the foregoing

P = boiler pressure in lbs. per square inch.
D = internal boiler diameter.
p = pitch or distance between the rivet centres parallel to the edge of the plate.
d = rivet diameter after rivetting.
f = stress.
t = thickness of plates.

In a common form of double-rivetted joint (fig. 154) for $\frac{9}{16}$ in. steel plates with iron rivets of $\frac{13}{16}$ in. diameter and double-butt strips, the pitch of the rivet is $2\frac{3}{4}$ ins., the distance between the pitch lines and between these and the edges of the plate is $1\frac{1}{4}$ ins., and the slant distance between the rivet centres is $1\frac{7}{8}$ ins. This joint is for a barrel with an internal diameter of 52 ins. and a steam pressure of 175 lbs. per square inch. In this case

$$f = \frac{P\,D\,p}{2\,t\,(p-d)} = \frac{52 \times 175 \times 2\frac{3}{4}}{2 \times \frac{9}{16} \times (2\frac{3}{4} - \frac{13}{16})} = 11{,}497 \text{ lbs. or 5 tons (nearly) for the plate stress.}$$

The tube and back plate are flanged and are secured to the wrapper plate forming the crown and sides by lap joints, single rivetted. The rivets are generally of iron, but a few railways use steel, and one or two use copper, rivets. The rivet holes are drilled, and the diameter varies between $\frac{11}{16}$ in. and 1 in., with a pitch of from $1\frac{7}{8}$ ins. to $2\frac{3}{8}$ ins. There appears at the present time to be great difficulty in getting copper suitable for locomotive fireboxes ; the material at present supplied being too soft and, perhaps, too pure owing to the demand of the electrician for pure copper and to some consulting engineers specifying the copper ordered by them to be almost pure—viz., 99·5 per cent. of copper. To obtain this result almost all the arsenic has to be eliminated, with the result that while the copper may be toughened it is also very much softened. There is not the least doubt that fireboxes made from copper manufactured fifteen and twenty years ago are in better condition than fireboxes made from copper manufactured only four or five years ago. The difficulty for the engineer is to specify what is actually required. Below are given the results of a few tests—taken from a great number—made to enable a satisfactory decision on this point to be arrived at. But a perfectly satisfactory conclusion was found difficult to obtain. If copper containing from 0·3 per cent. to 0·5 per cent. of arsenic were used for fireboxes it would no doubt be found to add considerably to their life as compared with the life of fireboxes made from a purer and necessarily softer quality of copper. Some fireboxes have been made with the amounts of arsenic above mentioned, but what exactly is the best hardening ingredient to add to copper so as to reduce corrosion and abrasion to a minimum has yet to be determined.

TABLE XIV.—TESTS OF COPPER PLATES TAKEN FROM WORN-OUT FIREBOXES.

Breaking Strain. Tons per sq. in.	Extension. Per cent. in 2 ins.	Arsenic. Per cent.	Mileage.
14·17	45·0	·184	369·208
14·48	50·0	·133	262·437
13·75	58·0	·726	396·210
14·34	51·0	·347	160·807
13·76	46·0	·026	368·134
14·49	36·0	·030	369·208

The following is a typical specification for copper firebox plates :—

SPECIFICATION OF COPPER FIREBOX PLATES.

The copper is to be of the very best quality manufactured, and of the exact dimensions, both as regards form and thickness, as given on the drawings or lists supplied.

irons on one side to the stay plates, and on the other to the cylindrical plates next to the boiler barrel. On the London and North-Western Railway the boilers are sometimes stayed by using gusset stays for the front tube plate, and longitudinal stays fixed to the outer firebox back plate. On the London, Brighton and South Coast Railway the front tube plate is stayed by means of tie-rods to the first length of the boiler barrel, and the back plate is stayed by means of screwed stays to the roof bars which support the crown of the firebox. Both in the United States and Canada the outer fireboxes are generally made with a wagon top; and the system of staying usually adopted consists in fastening, by means of tie-rods, the front tube plate to the first length of boiler barrel, and the back plate to the conical portion of the barrel of the boiler, similarly to the method adopted on the Taff Vale Railway. As an exception, on the locomotives of the Canadian Pacific Railway, the back plate of the outside firebox is stayed by means of tie rods to the conical portion of the boiler barrel, but the front tube plate is fastened to the first length of boiler barrel by means of gusset stays, as in the locomotives of the South-Eastern Railway.

On the European Continent these different systems of staying do not appear to be now applied. Tie-rods are no longer used, except between the back plate and first length of the boiler barrel, but the two plates in front and behind are stiffened by tee irons, or angle irons holding a stiffening rib rivetted to these plates. The barrel of the boiler performs in these cases the function of a tie-rod.

In the case of the super-elevated exterior fireboxes, or fireboxes on the Belpaire system—which are very much used on the Continent—the angle irons of the back plate are fastened in addition (as shown in fig. 155) by means of tie-rods, and the back plate is stayed to the first length of the boiler barrel.

Fastening between Firebox Tube Plate and Barrel.—The fastening between the firebox tube plate and boiler is generally effected by means of stays screwed through the tube plate into a bracket rivetted to the first length of the boiler barrel, M (fig. 148). Care should be taken to give these stays sufficient length between the points of attachment to permit of the expansion of the firebox laterally. Some exceptions to this practice occur, however, in English locomotives. It is generally found, when boilers come into the shops for repairs, that all these stays are broken, showing that they are of very little good. They also tend to impede the proper circulation of the water where it is of the utmost importance that it should take place freely. In experiments made with boilers running without these stays no difficulties have arisen.

Firebox Stays.—The vertical sides of the outside and inside fireboxes are fastened together by means of copper stays screwed into the two plates and rivetted externally and internally. The distance apart from centre to centre of these stays is varied according to the pressure of the steam.

On the Continent, with the object of notifying the breaking of

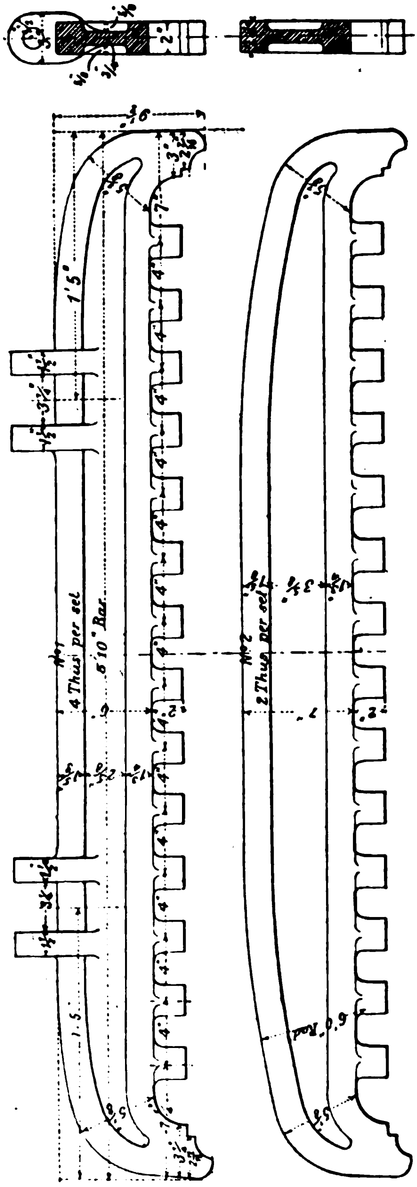

Fig. 162. -Bridge Roof Stays.

at that part and becomes brittle, so that the normal resistance of the plate in the nett section punched, depends upon the spaces between the rivet holes. With short distances between them, the resistance of the nett section of the plate may be greater than the normal resistance of the unpunched plate, but with less elasticity.

In proportion as the pitch of the rivets increases the resistance of the nett section diminishes, and with plates from $\frac{7}{16}$ in. to $\frac{9}{16}$ in. thick and a pitch of $2\frac{3}{8}$ ins. to $2\frac{3}{4}$ ins., it would appear from certain experiments that the resistance due to punching would attain its minimum, and that in this case the resistance of the nett section of the plate would be for iron 20 per cent. less than that of the unpunched section, and for mild steel, about 25 per cent.

Professor Kennedy, in his important researches upon rivetted joints, arrived at similar results for plates $\frac{3}{8}$ in. thick. He represents the variation per cent. of the resistance of the punched plate by the formula

$$12\left(\frac{4{\cdot}5 - R}{2{\cdot}5}\right),$$

where R = proportion of pitch to the diameter of rivets. Experiments have also led to the conclusion that the resistance varies with the thickness of the plate. For plates $\frac{3}{4}$ in. to 1 in. thick, the formula becomes

$$9\left(\frac{4{\cdot}5 - R}{2{\cdot}5}\right).$$

Without entering into the details of these numerous experiments, we see how difficult it is to ascertain exactly the resistance of the plate after punching the rivet holes.

In any case, the experiments upon rivetted joints show that the operation of drilling the plates does not appear to diminish, like punching, the strength of the nett section of the plate; according to Professor Kennedy it would even increase it.

Again, if, after a plate has been punched, we take away by drilling from $\frac{1}{16}$ in. to $\frac{1}{8}$ in. round the hole, the resistance of the nett section of the plate becomes nearly the same as that of the unpunched plate. Also if, after punching, we anneal the plate, the normal resistance is restored to the metal, and this is the usual way of overcoming the weakening of punched plates.

We may, therefore, conclude from these facts that in the construction of boilers the punching of iron or steel plates should be forbidden, unless care be taken to anneal the plate after punching, or the plate be punched to a smaller diameter than that of the rivet and the holes afterwards enlarged by drilling out a ring of iron from $\frac{1}{16}$ in. to $\frac{1}{8}$ in.

Under these circumstances the molecular condition of the metal between the rivet holes will be in its normal state, and we could, without error, assume for this section a resistance equal to that of the metal not punched. The coefficient representing the ratio of the strength of the joint to that of the actual plate, assuming the breaking strain to follow the line of least resistance, will therefore be represented by

$$\frac{l - d}{d}$$

where l = the pitch of the rivets,
d = diameter of the rivets.

The resistance of the rivets to shearing, whether in iron or steel, is always less than their tensile strength; and experiments have demonstrated that this resistance to shearing per square inch was independent of the number of shearing sections.

Certain engineers admit that the adhesion of the rivet head to the plate after rivetting may increase the resistance to shearing and render it nearly equal to the tensile strength. It is possible, indeed, that by the present mode of rivetting with hydraulic rivetting machines we obtain a certain increase of resistance. The experiments of Professor Kennedy upon rivetted joints show a resistance to shearing varying from 70 per cent. to 85 per cent. of the tensile strength of the plate. These experiments appear to show that the shearing surface of the rivets should be greater than the nett section of the plate left between the rivets.

The lateral area of the rivets—the diameter × the thickness of the plate—has a very great influence upon the resistance to shearing. According to the experiments made, the pressure over this area should not exceed 41 tons per square inch for lap joints. For double rivetted butt joints this may be somewhat increased in consequence of the diminution of the shearing stress owing to the increase in the shearing surface. In fact, for double rivetting with rivets alternated or disposed in a zig-zag line, the same experiments have shown that the nett surface of the metal measured in the direction of the zig-zag should be from 30 per cent. to 35 per cent. greater than that measured in following the straight line, the object being to ensure the rupture following the zig-zag direction.

The maximum pitch of the rivets in the case of double zig-zag rivetting appears to be about 3½ ins., and for single rivetting 2⅛ ins.

Machine rivetting is now almost everywhere replacing hand rivetting. Hydraulic rivetting machines, whether fixed or portable, are largely used at the present time, and give facilities for rivetting in the most inaccessible parts of the boiler, with accuracy and without noise; and the work is done more economically and more rapidly. A pressure of 1500 lbs. per square inch is the pressure generally used in Tweddell's machines with a differential accumulator.

Mechanical rivetting will always give better results than hand work, especially in the construction of high-pressure boilers. The rivet fills the hole perfectly, whilst with hand rivetting this cannot be ensured. It must not, however, be forgotten that hydraulic rivetting does not dispense with the necessity for accurate punching, drilling, and fitting of the plates.

Steam rivetting machines are now seldom used. They are not economical on account of the condensation of the steam, and can only be adapted with the greatest difficulty, the graduation of the pressure on the rivet causing great complication.

The pressure on the rivet during rivetting, which can be regulated by the accumulator, ranges between 25 tons and 50 tons, and is varied according to the thickness of the plate and diameter of the rivet. For plates $\frac{5}{8}$ in. thick and with 1 in. rivets, the pressure is generally 40 tons. Experience has shown that to obtain good rivetting the pressure should vary from 57 to 64 tons per square inch of the section of the rivet. In view of the greater strength of steel plates and to avoid galvanic action, which might be set up by the contact of different metals, the use of steel rivets for steel boilers would appear to be the most advantageous course ; but the use of steel rivets demands certain precautions. Steel rivets require to be heated to a temperature of from 1450° or 1650° Fahr. ; and if the heating be above or below this there would be a risk of their being injured, and some of them might be liable to fly off after cooling. The pressure on the rivet head should cease while it is still red—say about 1200° Fahr.—in the first place, because of the hardness of the metal, and secondly, because otherwise the crushing of the rivet head is to be feared. With steel rivets, therefore, the rivetting should be done with a smaller margin of temperature than for iron, and the operation should be performed more rapidly.

The use of steel rivets, indeed, necessitates the use of mechanical rivetting machines, which, with a greater and more regular pressure, combines more rapid work.

It is these considerations which are the cause of steel rivets not having yet become general, although their use is gradually extending. In any case the metal used should be very soft and ductile. Mild steel rivets are used by the London and North-Western Railway, the Great Western Railway, and the Lancashire and Yorkshire Railway.

Steel bars for rivets should have a tensile strength of not less than 26 tons, nor more than 30 tons, per square inch ; the elongation should not be less than 25 per cent. in 10 ins., and the contraction of area should not be less than 50 per cent.

It is not necessary to refer to the different experiments made to substituting welding for rivetting. In spite of the numerous advantages which this mode of manufacture may present, welding has been but little used for locomotive boilers. What will be the outcome of electric welding we are at present unable to say.

We must not forget that hydraulic rivetting does not dispense with the precautions which are always necessary in the preparation of the plates ; especially in punching or drilling the rivet holes, which should perfectly coincide before rivetting together.

The use of a drift is always a bad substitute for good work.

one or two instances already mentioned. These are usually placed only at the firebox end, but there are a few instances in which they are put at each end of the tube.

In America, where inside ferrules are not utilised, it is usual to place between the tube and the tube plate a copper liner. This yields to the tube expander and makes a tight joint. For some years past tubes with internal wings or "Serve" tubes have been tried in the boilers of English and French steam vessels; the results, although not definitely conclusive, nevertheless appear to have been satisfactory as regards the production of steam. Similar trials have been made by some railway companies but there was not much increase in the steaming power of the engines. The cleaning of the tubes appears to have been more difficult and to have demanded more personal attention.

The outside diameter of tubes varies between a minimum of 1½ ins. and a maximum of 2 ins.; the average and most general size is 1¾ ins. The thickness of the tubes varies according to the kind of metal used, but it is on an average about ·09 in.

In the manufacture of tubes, brass, copper, iron, and mild steel are respectively used. In America iron is practically the only metal employed, with the exception of a few cases where mild steel has been tried; brass is a great deal used in Europe, although the use of iron and mild steel tubes is extending. In England mild steel is used by several railways. Although this metal is more economical than brass it has the defect that it is rather an inferior conductor of heat, and incrustations adhere more firmly to it than to brass. Some engineers, therefore, consider its use should depend upon the chemical composition of the feed water. Iron tubes also necessitate a more frequent washing out of the boilers, or that the feed water should be purified before being introduced.

The brass used for tubes is generally composed of 70 per cent. of copper and 30 per cent. of spelter; although this is sometimes made 68 per cent. of copper and 32 per cent. of spelter.

These tubes, before being used, are tested internally by hydraulic pressure to a specified pressure. After being annealed they are submitted to tests of flattening out, flanging, beating down, and drifting out, and the tubes should stand these tests without cracks or other defects. Iron or steel tubes are submitted to hydraulic pressure both internally and externally. They are also submitted to tests of flattening, bending, flanging, and drifting out.

Several engineers use iron and steel tubes pieced with copper or brass ends in order to avoid the difficulty of making the steel tubes tight by expanding them in a copper tube plate. This is a very good plan to adopt when a boiler is being re-tubed, and the tube holes in the copper tube plate are enlarged—owing to frequent expanding—and the metal between the tube holes is thereby reduced.

Locomotive boilers should be re-tubed at least once in every five years.

SPECIFICATION OF STEEL BOILER TUBES.

The tubes to be lap-welded and to be manufactured of steel. The weld is to be perfectly sound and well finished, the ends are to be clean and square, and the surface free from defects.

Each tube is to be of the exact dimensions stated on the tracing furnished with the official order.

Steel diameter gauges for sizes of ends will be supplied by the Company, and the tubes must be made to pass through these gauges a good fit.

The tubes are to be supplied clean, free from rust inside and outside, and are not to be covered with paint or any similar coating, and both ends are to be properly annealed before delivery. The maker's name is to be clearly stamped on the outside of each tube.

Each tube is to be capable of standing, without leakage, an internal pressure of 800 lbs. per square inch, and an external pressure of 250 lbs. per square inch.

The contractor shall be required to provide at his own expense an additional tube for each 100 ordered, to be selected by the company's inspector from the bulk, and to be tested in his presence by the contractor to the pressures above mentioned.

Hydraulic Testing of Boilers.—In Great Britain the boilers of locomotives are tested—when they are new or when they have had considerable repairs done to them or the tubes renewed—by hydraulic pressure, generally to one and a half times the working pressure. There is no official rule fixing the testing pressure for locomotives as there is in the case of marine boilers. In the case of marine boilers, double the working pressure is compulsory—a margin which might have been necessary when the pressures of from 50 to 100 lbs. per square inch were common. It is, however, questionable whether it is desirable to have the same rule when working at 180 lbs. to 200 lbs. per square inch. Warm water is used at a temperature of from 70° to 80° C., and the pressure should be maintained for at least ten minutes. When, for the purpose of stopping a leakage, it is necessary to caulk a joint, any caulking tool in the shape of a chisel is prohibited. The following regulations in reference to testing locomotive boilers will be found very complete:—

REGULATIONS FOR HYDRAULIC TESTING OF BOILERS.

1. All locomotive boilers must be tested, when new or after undergoing heavy repairs, with hydraulic pressure and warm water to one and a half times their working pressure. This test must be applied in the presence of the foreman boilermaker and the foreman erector, and both foremen must sign the register kept for the purpose.

2. The test to be considered sufficient for the life of the first set of tubes, provided they do not last more than five years. At the end of five years, or earlier if re-tubed, the boiler must again be tested, and after the second test the boiler must be tested every time it is re-tubed, provided the tubes do not last more than three years. The test, in every instance, to be with hydraulic pressure and warm water, and in the same ratio as the first test; the pressure to be kept up ten minutes.

3. Working pressures to be governed by the condition of the boiler, and reduced at the discretion of the foreman in charge of the engine.

4. Each time a boiler is tested the foreman must make a personal examination of the internal and external condition of the boiler, keep a register of the same, and send a report to the works' manager, so that the particulars may be entered in the books kept for the purpose; special attention to be called in the report to any defects observed.

5. In all cases after the hydraulic test has been applied, the safety valves must be left free, the water lowered to its working level, and steam got up to the working pressure. When any caulking is required, the tool employed must be that known as a "fuller"; no wedge-shaped tool must be used in any case.

6. When an engine is sent to the shops for repairs, and requires testing, the fact must be noted on the repairs' sheet, and the testings performed by the foreman boilermaker at the works, who will be held responsible that such testings are properly done.

7. Two gauges in all cases to be used in testings, and these are to be compared with standard gauge at intervals never exceeding three months.

French Type of Boiler with Two Barrels—Before concluding this chapter mention should be made of a type of boiler designed for one of the French Railway Companies. The boiler has two cylindrical barrels superposed. The lower barrel contains the tubes, and the upper barrel—of smaller diameter—is connected to the lower one by tubes, and serves for a steam chamber. This arrangement has enabled the heating surface to be increased without lengthening the boiler, as it is in height that this increase is obtained. With the same grate area a large firebox is obtained, and, consequently, a larger direct heating surface. This boiler, which was first supplied to a Crampton locomotive, has also been applied to ten bogie express locomotives working at a steam pressure of 170 lbs. per square inch.

Cleading.—The boiler should be completely covered with some non-conducting material. Many substances are employed, but the most common is wood—well seasoned pine, in strips of not more than 2½ ins. wide and ¾ in. thick tongued and grooved. This wood is often painted with asbestos fire-proof paint on both sides, and then covered with smooth steel or iron sheets, No. 14 S.W.G. The sheets are secured at the joints with hoop iron bands 2½ ins. wide. A beading is placed at the front end of the boiler of sheet brass or iron, shaped to cover the rivets in the front tube plate and angle ring. A coping is also frequently used to cover the rounded end or radius at the back plate inside the cab. On some railways the back plate is lagged all over. The manhole casing is made of charcoal iron 14 S.W.G. thick, and fitted with a cast-iron or brass shield for the safety valve columns. The dome casing is made of brass or charcoal iron 14 S.W.G. thick.

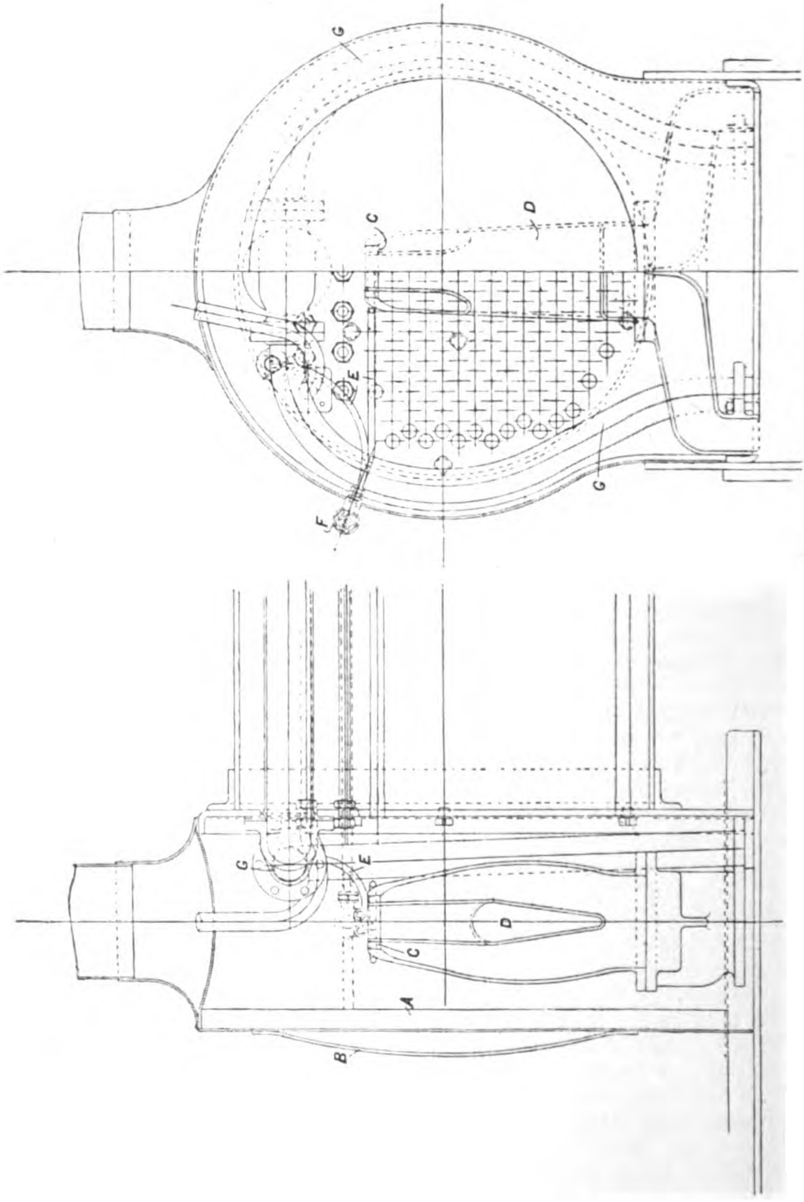

Fig. 164.—Smokebox, Blast Pipe, and Steam Blower.

In certain experiments, the vacuum in the smokebox varied from a mean of 2·84 ins. of water at the middle of the middle row of tubes, to a maximum vacuum of 15 ins. at the base of the chimney. Should there be a leak in the smokebox, or the firehole door be opened, the vacuum is reduced; closing the damper raises the vacuum, and the greater the blast the greater is the vacuum. The height of the blast pipe differs considerably in different cases; but it has not been found advantageous in Great Britain to place it higher than the top row of tubes. When the blast pipe is disposed lower than this, the chimney is prolonged in a conical shape into the smokebox. The determination of the size of the orifice of the blast pipe is important. If too small, the blast is sharp, and the consumption of fuel and back pressure in the cylinders become excessive. At the same time the orifice must not be too great, or the boiler will not steam well. Its diameter depends a great deal on the size of the chimney. The diameter, if possible, should be $\frac{D}{3{\cdot}75}$, where D is the chimney diameter.

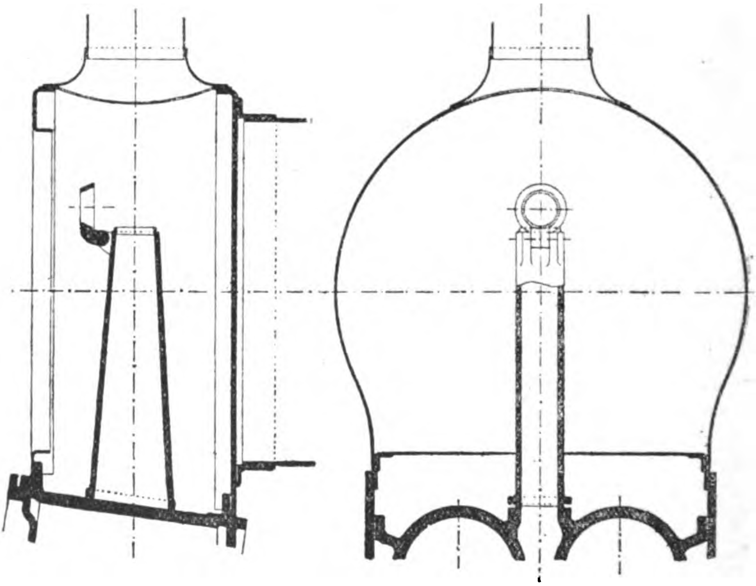

Fig. 165.—Macallan's Variable Blast Pipe.

In the four-cylinder engines recently designed by Mr. Webb, two blast pipes are employed with the object of obtaining a uniform distribution of draught over the tubes. The smokebox is divided by a horizontal partition into two compartments and a blast pipe is placed in each. Each compartment is provided with a separate chimney, that of the lower one passing through the upper.

Macallan's Variable Blast Pipe.—Many experiments have been made with a view to improving the form of the blast pipe. On the Continent variable blast pipes are much used. The principle is undoubtedly good, as it is possible with this arrangement to adjust the area of the blast as the work required to be done by the locomotive varies. The drawback to the variable blast pipe is the

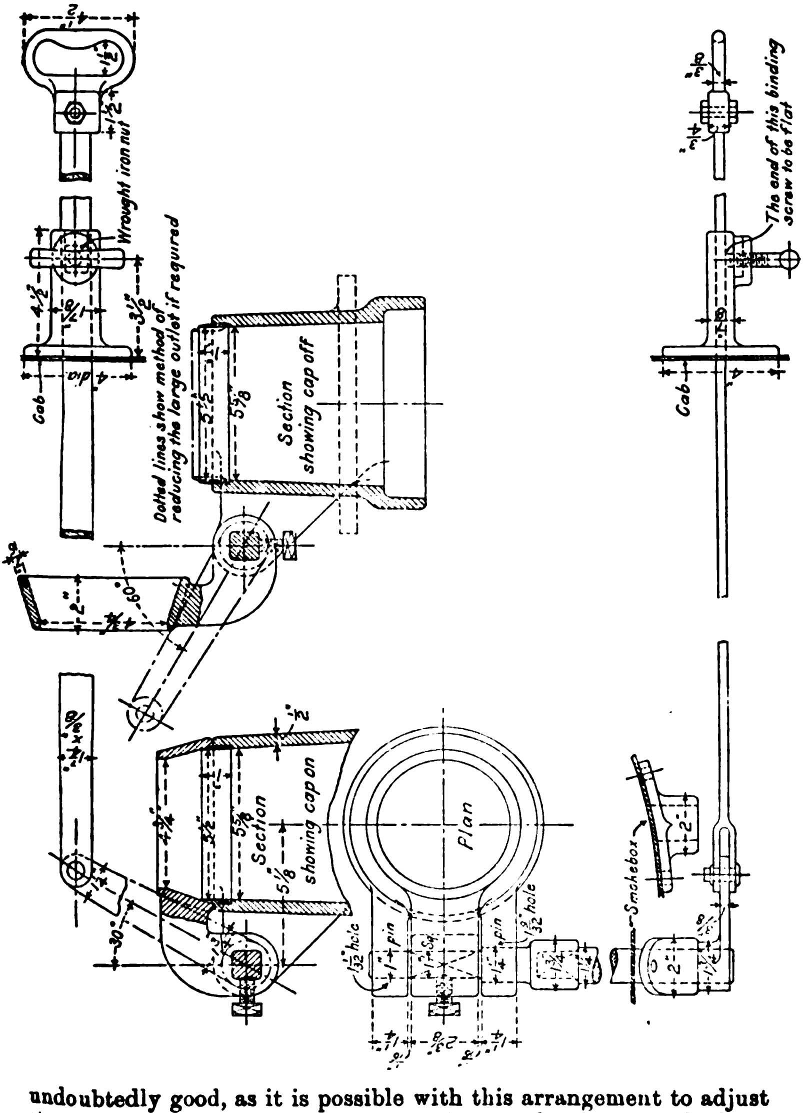

Fig. 166.—Details of Macallan's Variable Blast Pipe.

from the footplate. The indicator diagrams in fig. 167 show the working of an engine fitted with one of these pipes. The diagram in fig. 167 was taken with a spring of 80 lbs. to 1 inch; the diagram in fig. 168, which was taken simultaneously, with a spring of 16 lbs. to 1 inch. These show that when the top is off, half the back pressure is removed at the most important part of the stroke.

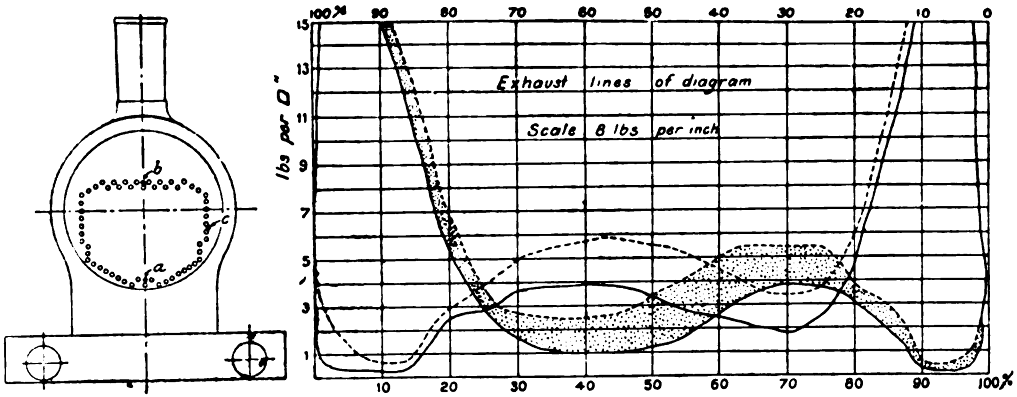

Fig. 169.—Effect of Variable Blast.

INDICATOR DIAGRAM TAKEN NEAR WRABNESS.

Engine cutting off at 45 per cent. of stroke; making 84 revolutions per minute, and working a train of 35 wagons *up* a gradient of 1 in 211, at a speed of 14·7 miles per hour. Boiler pressure 140 lbs. per square inch.

The broken lines show the diagram taken with the 4$\frac{3}{8}$ ins. blast pipe (*top on*).
The full lines ,, ,, 5$\frac{3}{8}$ ins. ,, (*top off*).

Vacuum in Smokebox—

	Top on.	Top off.	
At *a* (middle of bottom row of tubes), ...	2·8	2·3	inches of water.
,, *b* (,, top ,, ,,), ...	2·6	2·1	,, ,,
,, *c* (at side of smokebox midway between *a* and *b*),	1·6	1·3	,, ,,

The diagram in fig. 169 is from a goods engine working a train load of thirty-five loaded goods wagons, and was taken with a spring of 8 lbs. to 1 inch. The reduction of back pressure when the top is taken off is clearly shown by the full lines.

Adams' Vortex Blast Pipe.—The vortex blast pipe designed by Mr. W. Adams, late of the London and South-Western Railway, is shown in fig. 170. Another example is shown in fig. 164. It is claimed that by this blast pipe the draught is equalised through all the tubes—that is, the draught is distributed over the bottom as well as the top rows. The blast pipe is constructed so that the steam issues from an annular orifice, C, which terminates at the level of the top row of tubes. The entrance, D, to the interior of the annular space is made to face the lower tubes; so that the draught through them is greatly improved and the whole of the tubes share equally in the work of conveying the heated gases to the chimney.

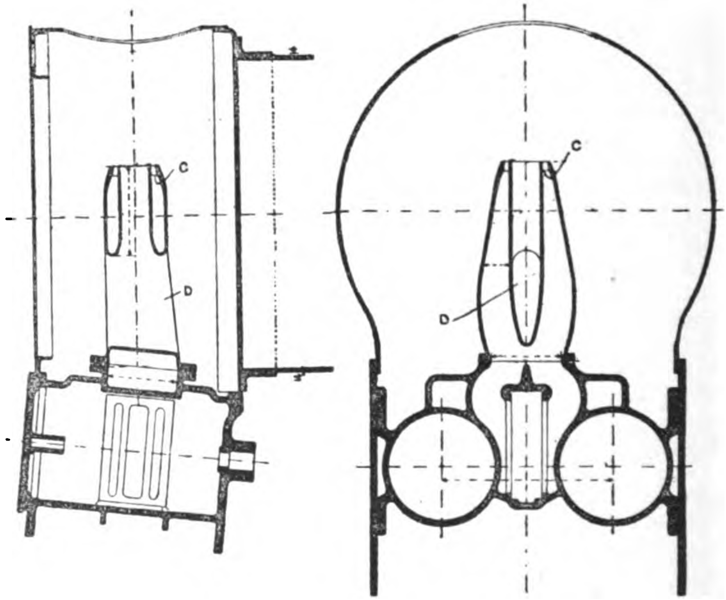

Fig. 170.—Adams' Vortex Blast Pipe.

This arrangement allows the exhaust steam to be emitted at a lower velocity than in the ordinary blast pipe, and the area for its escape is so proportioned as to reduce the back pressure upon the piston to a minimum.

The reduction in the velocity of the blast, accompanied by an equable action on the tubes, causes a more uniform flow of air through the furnace. No holes are formed even with a thin fire, baffle, also becomes heated before coming in contact with the firebox sides and passing through the tubes.

Firehole Doors.—These are made, in various ways, of cast iron and of iron or steel plates. They are frequently in two halves, made to slide in opposite directions by means of levers, both sides being made to open at the same time. The opening for the admission of air can also be regulated in this way. Doors are also hinged at the top and made to open up; others are hinged at the bottom and made to open down; while some are fitted with louvres, so that a certain amount of air is admitted when the door is closed.

Liquid Fuel Fittings.—Plate VI. illustrates an express passenger locomotive and tender designed by Mr. James Holden for burning liquid fuel. This locomotive is a standard express engine, and the whole of the liquid fuel apparatus is so arranged that it does not at all interfere with the use of the locomotive as an ordinary coal-burning engine. Indeed, the alteration from all oil burning to all coal can be made on one trip, if required. That is to say, the engine might start out burning all liquid fuel, and, supposing the supply to run short, could gradually take to coal burning until solid fuel alone was being consumed. The change could, however, be made at once, if required.

The liquid fuel burning apparatus is placed below the footboard, so as not to interfere with the ordinary working of the locomotive. The firebars remain, and are available for coal firing. The injectors, described later, face two holes provided through the firebox casing, about 12 ins. above the firebar level. These openings are formed by means of two short cylinders, the outer one being of copper and the inner of steel. The necessary holes being cut in the inner and outer boxes, the copper cylinder is driven in tight and the ends are flanged over on the outside. On the inside are two annular projections, or collars, solid with the metal. The steel cylinder, or ferrule, which is a driving fit to the copper cylinder at its larger internal diameter—where the collars do not project—is then forced in, and as its external diameter is greater than the internal diameter of the flat ribs, or collars, the latter have to give way. The result is that the ribs are transferred from the inner to the outer circumference of the copper cylinder simply by the pressure of the steel ferrule. The ribs are so distanced from the ends of the cylinder that when forced to the outer circumference they abut against the inner edges of the inner and outer firebox plates; the edges of the plates being thus gripped between the outer flanges of the copper cylinder and these ribs.

Extra firebrick is required in the firebox when burning liquid fuel on Mr. Holden's system, to form the wall shown beneath the arch.

Referring to Plate VI. in greater detail, there is seen, at the upper part, the locomotive and tender in side elevation and in plan. At the left-hand side are shown a back elevation of the engine and a front elevation of the tender. Below are shown to a larger scale details of the air and fuel injector, while at the centre are shown in detail the devices for regulating the fuel supply.

The liquid fuel is carried in two cylindrical tanks, F′, F″, on the tender, with a combined capacity of 600 gallons. From these it is conveyed by pipes and a flexible connection to the engine. Here branch pipes, D′, D″, are provided to each burner, with regulating valves, C′, C″, worked through spindles from a convenient position by the devices shown in the figures at the middle of the Plate. Liquid fuel can be simultaneously admitted to, or shut off from, both injectors, B′, B″, by one horizontal movement of the handle marked A, or the supply to either one of the injectors can be regulated and controlled by turning the milled heads, B. These lift the valves C′, C″, whereas the partial turn given by the handle A merely revolves the valve, as in the turning of the plug of a cock.

On reaching the injector the fuel is sprayed by an internal annular steam jet. The steam, as it escapes from its orifice, to mingle with the fuel, sets up a strong induced current of air through the central air tube. This induction of air is made use of to exhaust the air for the vacuum brake, a continuous vacuum of 22 inches being maintained.

By means of a cock, L, the air-suction pipes can be put into communication with air-heating coils, J, in the smokebox, thus supplying *hot* air to the centres of the injectors for the combustion of the oil. The fuel spray escaping from the nozzle of the injector is further atomised by small jets of steam escaping from the ring surrounding the burner, as seen in the section-plan at the bottom of Plate VI. At the same time this ring acts as a blower, inducing a current of atmospheric air which tends towards complete combustion, and further spreads and diffuses the flame and heated gases over the firebox.

Steam is obtained from a fitting on the firebox front, having an internal pipe leading from the dome. This is provided with four cocks marked 1, 2, 3, 4; one for supplying steam to the central jets of the injectors; one for the ring blowers; another for steam for warming the coils, I, in the oil tanks; and the last for allowing a steam jet to enter the oil pipes for cleaning purposes.

The usual practice on the Great Eastern Railway is to keep the firebars covered with an incandescent base of solid fuel, the combustion being limited by partially closing the dampers.

The liquid fuel consists of oil, coal-gas tars, creosote oils, or petroleum residues. With any of these, if fair examples, 1 ton will nearly replace 2 tons of coal. This difference in favour of the oil fuel is not only to be attributed to its higher calorific value, but also to the fact that very complete combustion can be secured, and no unnecessary air need be admitted at the fire-door, as usually occurs at intervals of firing with a coal fire. Further, the fire can be exactly regulated to meet requirements.

The liquid fuel burners—for a month's average of over 3000 miles—burn:—

Coal for lighting up, standing, &c., . .	11·8	lbs. per mil
Liquid fuel, running, ...	10·5	,, ,,
Total,	22·3	,, ,,

This compares favourably with a consumption of 34 lbs. of co similar engines on the same service.

INDEX TO PLATE VI.

1, 2, 3, 4	Steam fitting with four cocks, supplying—
	1, Steam to warming coils in liquid fuel tanks.
	2, ,, ring blowers on injectors.
	3, ,, centre jets of injectors.
	4, ,, for cleaning liquid fuel pipes and injectors.
A	Handle for operating both fuel valves simultaneously.
B	Milled heads for operating fuel valves separately.
B′, B″	Combined liquid fuel injectors and air ejectors.
C′, C″	Liquid fuel regulating valves.
D,′ D,″ D‴	Liquid fuel pipes with cocks on tanks at E′, E″.
F, F′, F″	Cylindrical fuel tanks.
G, G′, G″	Filling holes with strainers.
H	Pipe connecting cock L to air-heating coils.
H′, H″	Air inlets.
I	Steam warming coils.
J	Heating pipes for air feed to centre of injectors, conducted alo pipe, H.
L	Cock for connecting fuel injector air-supply pipes either vacuum pipe or directly to the air-heating coils, J.
M	Liquid fuel gauge.

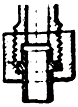

will shut off with the rush of water that takes place when the glass breaks. Fig. 171 shows the details of the valve. In this, the valve is accessible for examination. The cap, D, may be unscrewed, and the support, C, that holds the ball can then be taken out. The pressure in the glass tube being the same as that in the boiler, the ball normally remains in the support C; but should the glass break, the ball is forced by the pressure in the boiler against the seating at the bottom of the glass.

Water gauges may have either flanges or screwed ends for fixing them to the boilers, but flanges are preferable. These are usually fixed with four $\frac{1}{2}$-in. or $\frac{5}{8}$-in. studs and nuts. In addition to the flange, there is a spigot 1 in. in diameter which enters the hole on the back plate.

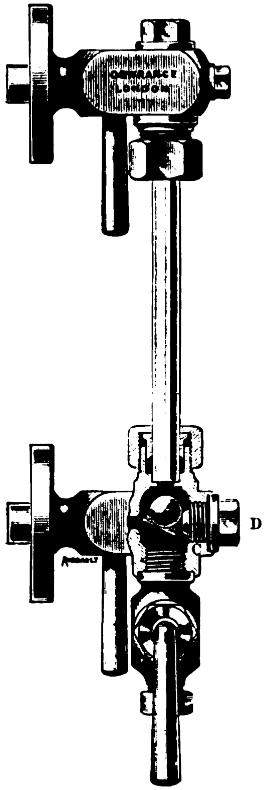

Fig. 171.—Water Gauge showing Self-closing Ball Valve.

Pressure Gauges.—The pressure of steam in the boiler is indicated on a gauge, of which examples are shown in figs. 172, 173, and 174, generally fixed on the weather-board or front plate of the cab in front of the driver. The pressure in lbs. per square inch is marked in black figures on a white dial (fig. 172). Inside the case of the pressure gauge, if made on the Bourdon system, is a curved solid drawn tube of a flat oval section, disposed as in the examples in figs. 173 and 174. The steam is carried from the boiler by a $\frac{3}{8}$ in. copper pipe formed into a syphon before being attached to the gauge. The pressure of the steam in the tube in the gauge case causes it to become more circular and to straighten out, thus moving the needle on the dial. The greater the pressure the more the tube straightens, and the larger the movement of the needle.

Safety Valves.—On every boiler there should be at least two safety valves, which must act readily and rapidly. Two kinds are chiefly in use on locomotive boilers. One of these is the Ramsbottom duplex safety valve seen, for example, at O, Plate 1. These are made sometimes with brass columns, sometimes with cast iron; when of the latter, they are fitted with brass valves and seats. One arm of the lever through which the spring acts on the valves is prolonged, so that either of the valves can be eased slightly in order to test their working. The other kind of safety valve is that

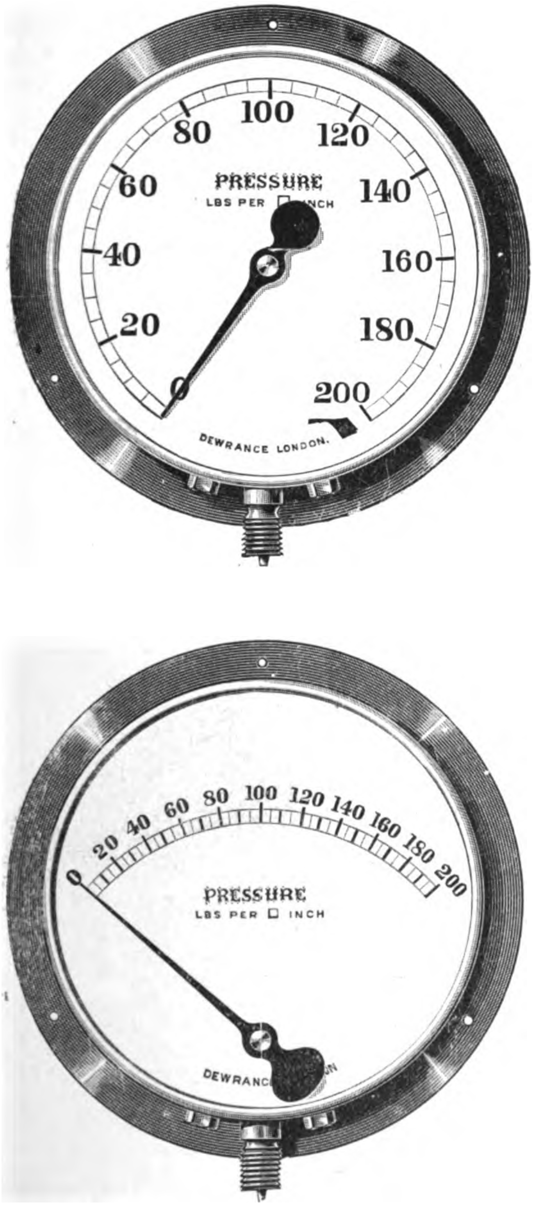

Fig. 172.—Pressure Gauges.

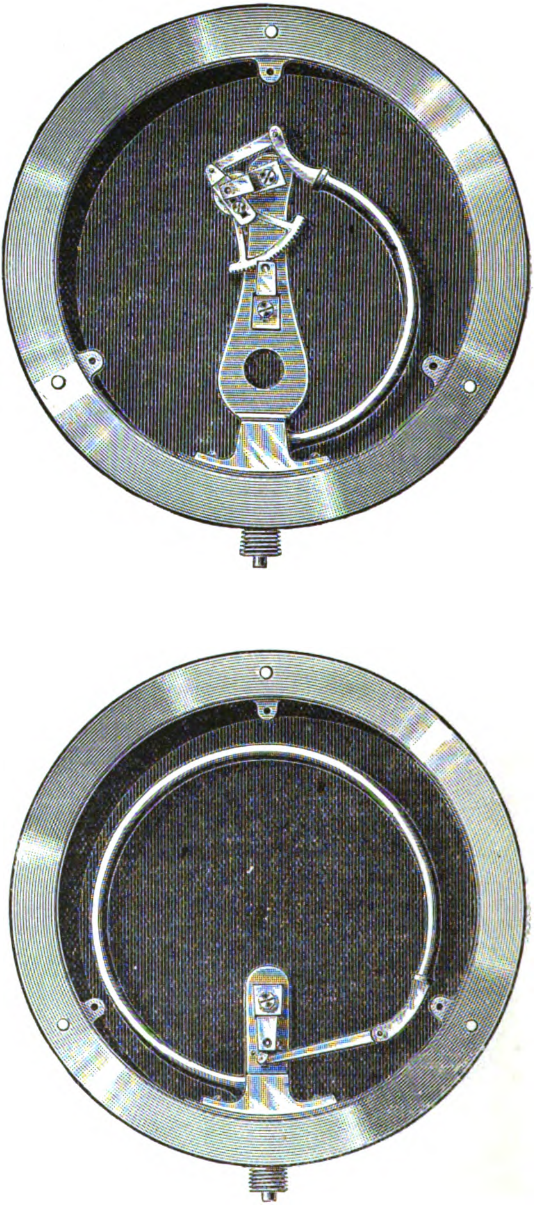

Figs. 173 and 174.—Mechanism of Pressure Gauge.

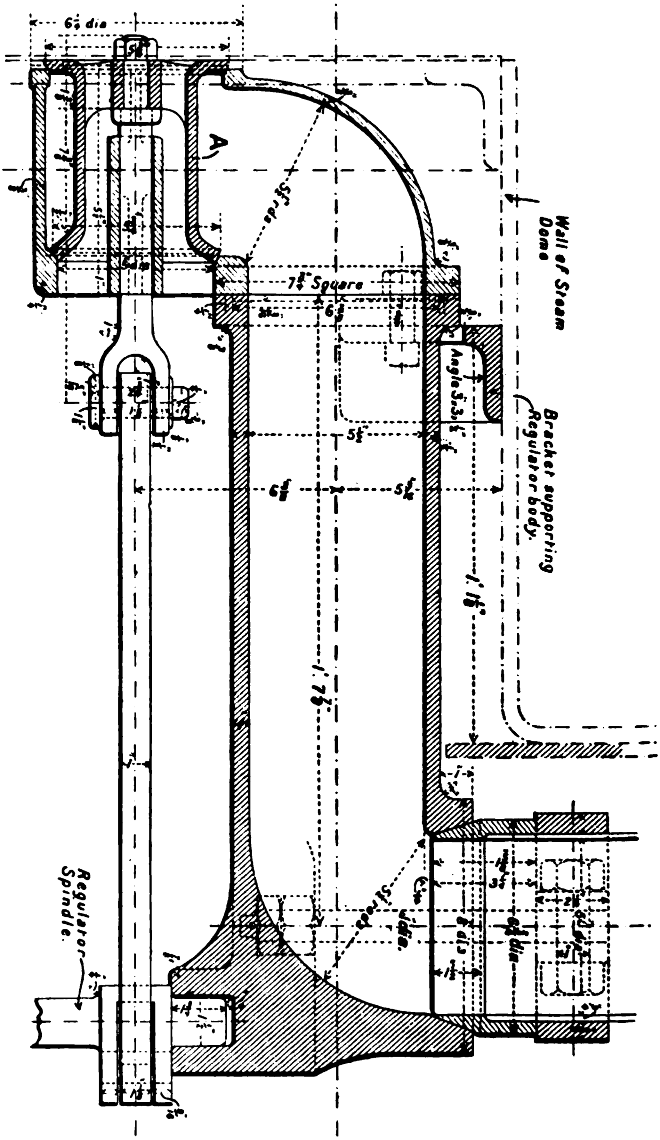

Fig. 175.—Double Seat Regulator.

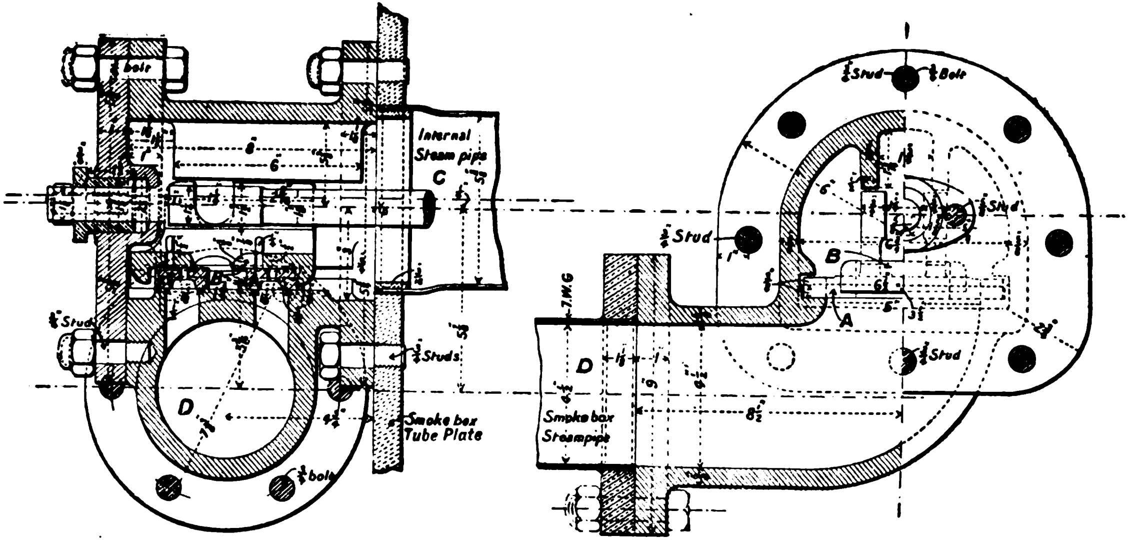

Fig. 176.—Smokebox Regulator.

area of the opening of the regulator valve at the entrance to the steam pipe should be—

$$\frac{D^2}{16} \text{ where } D = \text{diameter of cylinder.}$$

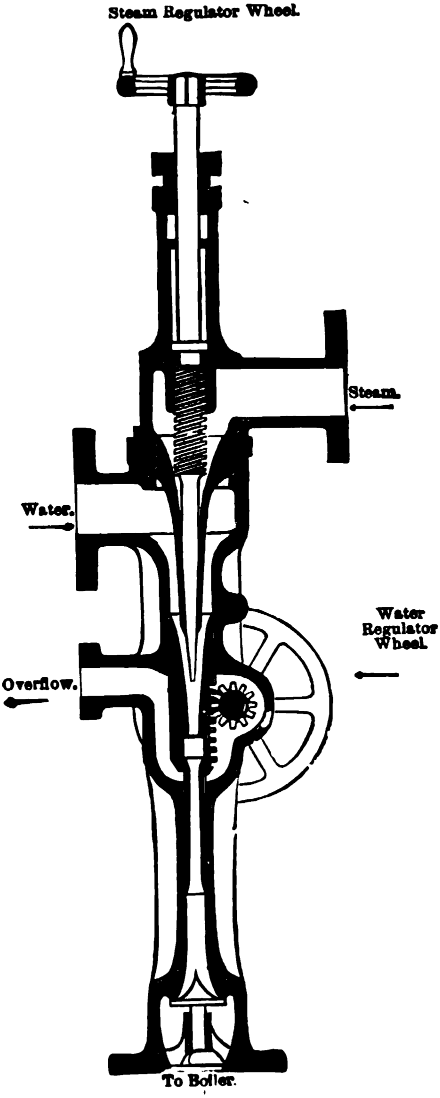

Fig. 178.—Giffard's Injector.

Steam Pipes.—The internal steam pipe is in most cases carried to the regulator in the dome, so as to get the steam as dry as possible; it is about 6 or 7 S.W.G. in thickness, and varies in diameter from 4 ins. to 5½ ins. In boilers without domes the pipe is carried the entire length of the boiler, and has holes or slots in the top of it. The regulator spindle in this case rests on two or more pieces brazed to the inside of the pipes. The steam pipes in the smokebox, of which there are two for outside cylinders, as seen at G, G in fig. 164, are connected with the tee piece on the tube plate, and extend to seatings on the top of the steam chest. One steam pipe only is used in most cases with inside cylinders. The smokebox steam pipes are curved to the radius of the smoke box so as to clear the tubes. They are generally made of copper, as they are exposed to changes of temperature and subjected to a great deal of expansion and contraction. In America, cast-iron steam pipes with spherical joints are commonly used.

Injectors.—For feeding the boilers, injectors

GEMENT OF INJECTORS.

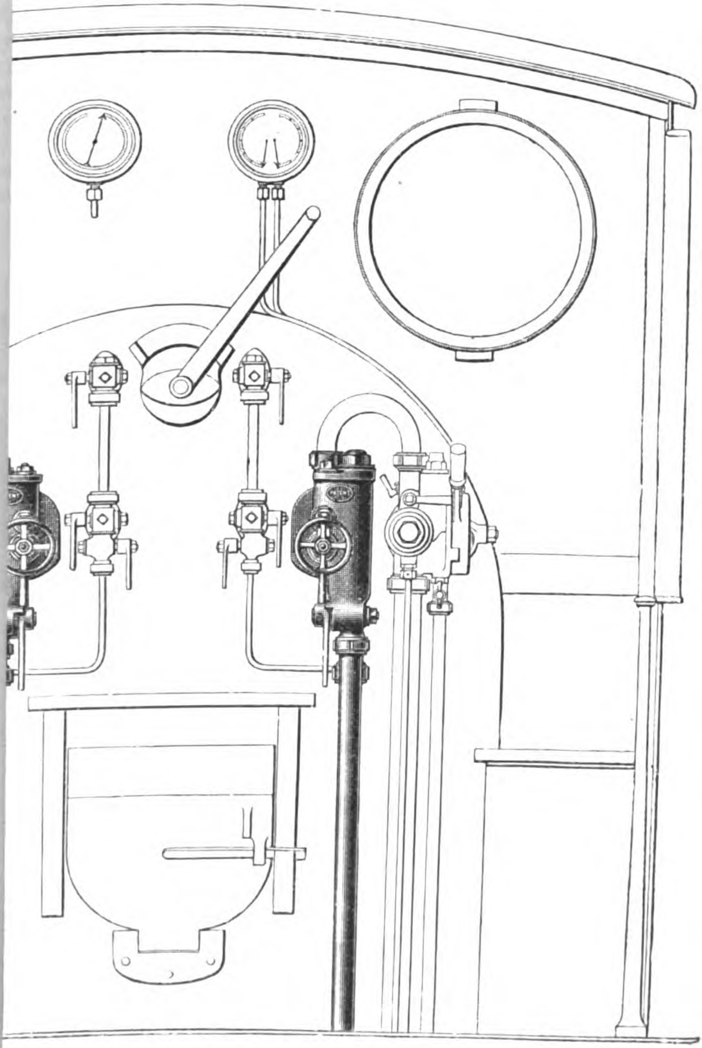

, 177.—Arrangement of Injectors.

enter the boiler; otherwise, steam and hot water would accumulate in the injector, and condensation of the jet of steam would accordingly be prevented. This accumulation is guarded against by the provision of *overflow* openings at the *throat*—or smallest portion—of the *combining tube*, or conical nozzle in which the steam and water mingle.

A compact design of injector—Dewrance's—with a removable cover, which can be taken off when the cones require examining or cleaning, is shown in fig. 179.

For working injectors of the above classes, the valve or cock supplying steam to the injector from the boiler is first opened. Then the water supply inlet is opened about half way by means of the graduated hand wheel on the injector, or by the cock on the water supply pipe. Next, the steam spindle—in the case of lifting injectors, or the cock on the steam pipe in the case of non-lifting injectors—is opened until water issues freely from the overflow pipe. The steam valve or cock is then opened to the full extent. If water continues to issue from the overflow pipe, the water supply is regulated by means of the graduated hand wheel on the injector, or the cock on the water supply pipe, until the overflow ceases.

In fixing the injectors the pipes should be not less than—

1 in. internal diameter for Nos. 4 and 5.
1¼ ins. ,, ,, 6 ,, 7.
1½ ins. ,, ,, 8 ,, 9.
2 ins. ,, ,, 10 ,, 11.

Quick curves or sharp bends should be avoided in all the pipes.

Ordinary lifting injectors may be placed either above or below the water supply; if above, the distance must not exceed, for No. 3 injector, 4 ft.; No. 5 injector, 5 ft.; and so on up to 12 ft.

Non-lifting injectors must be placed either below or on a level with the water supply; both these and the lifting may be fixed either vertically, horizontally, or in any other position. The water supply pipe should have a rose attached to the end of it, and must be perfectly air tight.

A back pressure valve—clack box—must be placed on the delivery pipe between the injector and the boiler; also a valve or cock on the steam pipe, and also on the water supply pipe.

Automatic Re-starting Injectors.—In the early stages of the development of the injector a difficulty was found, not only in starting the action, but also in maintaining it with certainty. To overcome this difficulty various forms of automatic or re-starting injectors have been invented. The essential feature in these is the provision of some device by which an additional overflow outlet is automatically opened whenever an interruption in the action of the injector occurs. Figs. 180 and 181 illustrate two examples of Gresham and Craven's self-acting re-starting injectors. In these, the combining tube is divided at about the middle of its length into two portions, A, B; and the lower portion B is made capable of sliding lengthwise. When the injector is working normally, the effect of the pressures acting on the movable portion of the tube is to cause it to close up towards the fixed portion A. But when the jet, for any reason, fails to enter the boiler, the tube B slides back, forming a gap between the two portions, and allowing a free vent to the steam until the proper action of the injector is re-established.

Self-acting injectors are now very much used. They possess many advantages over other kinds. Their simplicity of construction recommends them. They are automatic, requiring no regulation of steam, and start working immediately the steam and water cocks are opened. They will work equally well either above or below the water supply, and will lift the water 10 ft. or 20 ft., according to their size and the pressure of the steam. They may be fixed either vertically, horizontally, or at an angle. A further great advantage is that the cones may be taken out and cleaned without breaking any pipe joints.

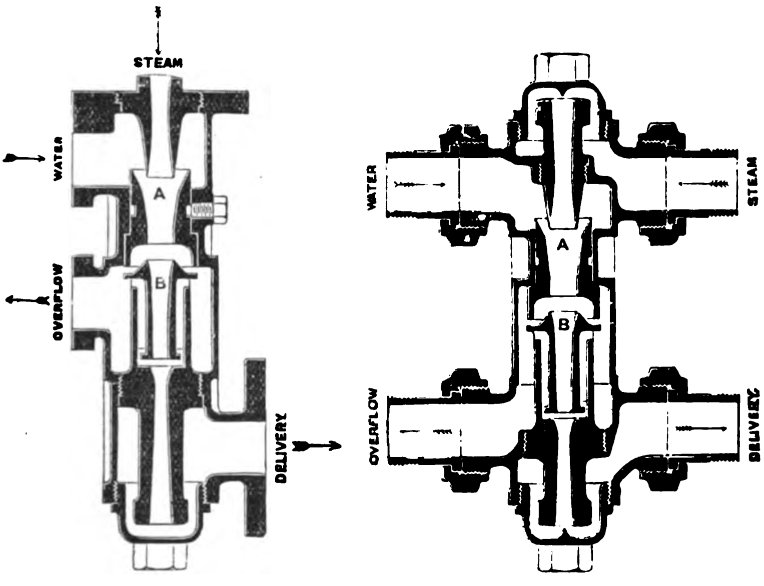

Fig. 180. Fig. 181.

Gresham and Craven's Re-starting Injectors.

Fig. 182 shows another form of self-acting injector known as Gresham's patent combination injector. Injectors of this kind are fixed on the back of the firebox. They are designed so that there is only one connection to the boiler; there are no pipes inside or outside the boiler exposed to pressure; all the cones of the injector can be removed for cleaning, by unscrewing the cap A, whilst the boiler is under pressure. They have the following valves self-contained :—steam valve, back-pressure valve, clack box, stop valve, water regulating valve, and warming cock.

Exhaust Injectors.—The exhaust steam from the cylinders has also been made use of, either alone or jointly with live steam, for injecting the feed water into the boiler.

An improved injector of this kind—Davies and Metcalfe's patent—called an exhaust steam injector is used on several locomotives. It works partially with exhaust steam and partially with live steam.

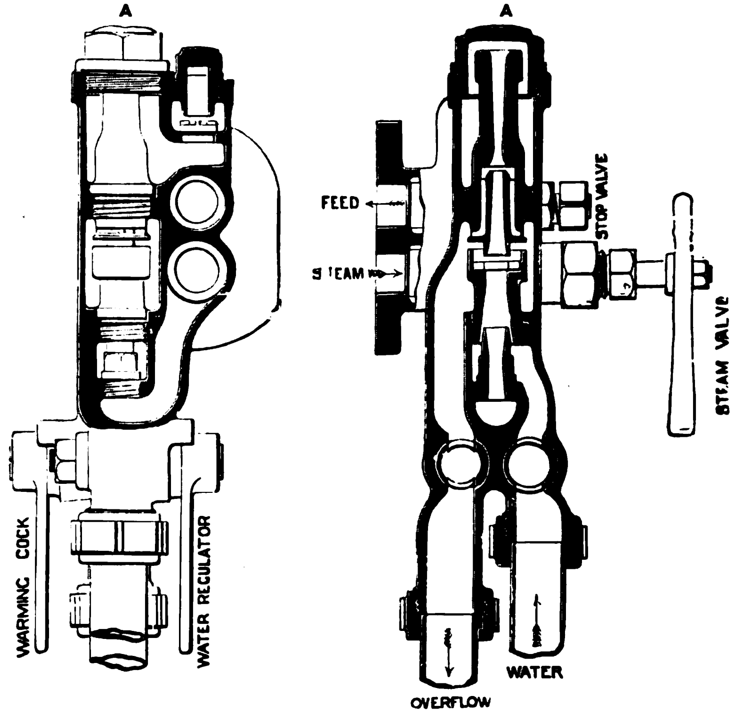

Fig. 182.—Gresham's Combination Injector.

These injectors are made in different forms. They are sometimes in two parts, the first portion only (fig. 183) being worked with exhaust steam. This takes the feed water from the tender or tank at the ordinary temperature, and heats it up to nearly boiling point. In addition to heating the feed water, a pressure of 70 lbs. per square inch is given to it. The water is delivered at this pressure and the temperature mentioned to a supplementary injector (fig. 184) worked

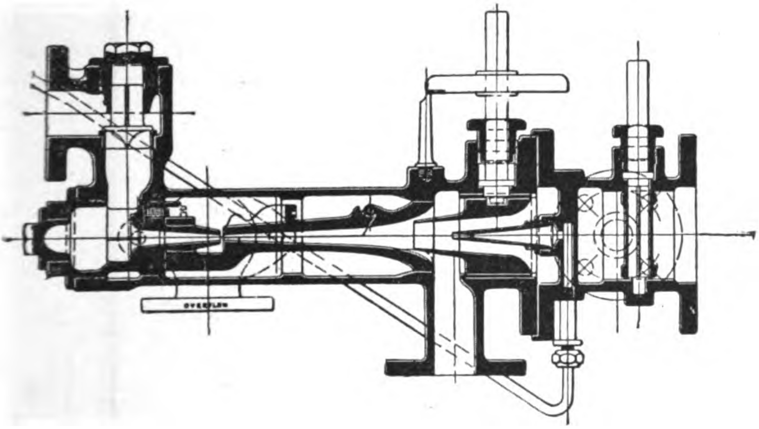

Fig. 183.—Exhaust Injector (Exhaust Portion).

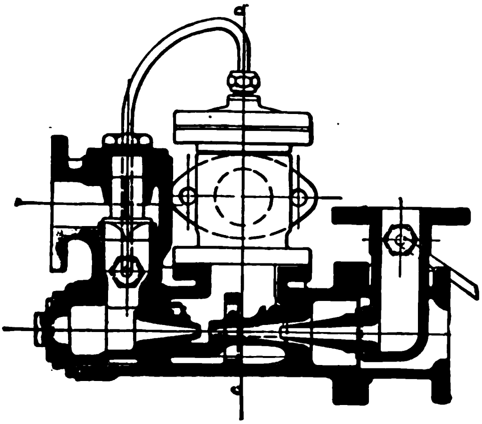

Fig. 184.—Exhaust Injector (Supplementary Portion).

with boiler steam. This injector is stated to heat the wate temperature of 270° F., and at this temperature it enters the b

Automatic action is attained in this form of injector b manner in which the combining tube is constructed. This tu divided longitudinally into two parts, which are hinged toge When the apparatus is working normally, the combining tube as though undivided; but when the jet breaks the two parts so as to afford the temporary free outlet requisite for the re-e lishment of the injecting action. A small tube extends from supplementary or live steam portion to the exhaust portion enabling live steam to be supplied in small quantities to the la when the engine is standing.

A modification of the supplementary portion has been desig to fit on the back of the firebox in the same manner as that sh in fig. 182.

Fig. 185 shows another form, combining the two injectors in casing.

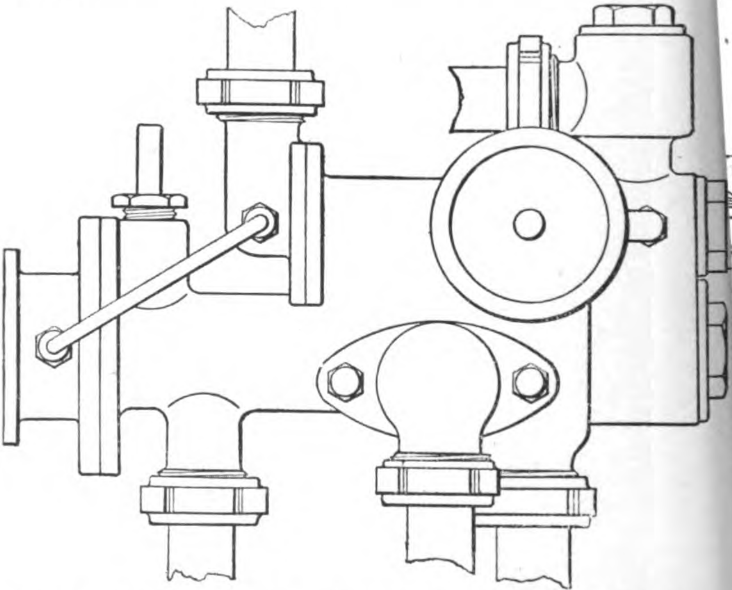

Fig. 185.—Exhaust Injector (Combined Exhaust and Supplementary Portion).

For working the self-acting injector, the steam and water supply are opened by means of the valve or cock provided for the purpose. If there is any overflow the water must be regulated by means of the valve on the supply branch until it ceases. The injector is then at work.

For the efficient operation of an injector, a supply of dry steam

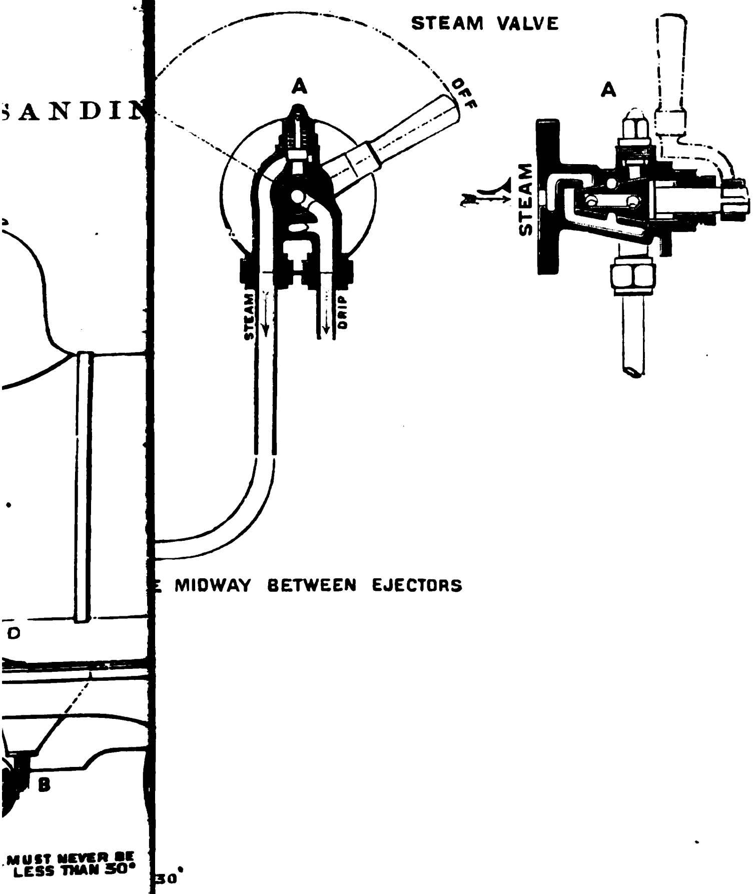

TEAM SANDIN

TEAM SANDING EJECTOR,

closed at both ends, and the rod connected to the scoop has bellows sleeve similar to those used for the vacuum brake. Pipes F, lead from the cylinder E to a four-way cock, G, connected to the vacuum chamber, H, by which the action of the cylinder is easily controlled.

These tenders have :—

Tank capacity, ...	1800 gallons.
Fuel, ...	3 tons of coal.
Wheel base, ...	10 ft. 6 ins.
Diameter of wheels, ...	3 ft. 7⅞ ins.
Weight in working order, . . .	26 tons 2 cwts. 2 qrs.

As there are tenders running in this country carrying 4000 gallons of water—which means hauling a great weight—particular attention is called to these tenders. The water pick-up apparatus is used also on the London and North-Western, the Great Western, and the Great Eastern Railways. It necessitates a trough being laid down between the rails from 400 to 500 yards long, and of the section shown in Plate VIII. There is no doubt that as the weights of trains and the lengths of runs without stopping increases, this arrangement will come more into use.

Tenders for Liquid Fuel Engines.—The tender for the liquid fuel-burning express engines on the Great Eastern Railway has been illustrated in Plate VI. Two cylindrical tanks are provided in these for storing the liquid fuel, of an aggregate capacity of 600 gallons. These are placed on top of the tender, one on each side, extending the whole length. The cylinders are fitted with filling holes with covers and strainers, also with air-inlets, steam warming coils and gauge glasses. In other respects these tenders are of the usual design and construction.

Principal Dimensions of Typical Tenders.—Particulars of the tenders for the express and goods engines on the South-Eastern Railway are given below :—

Particulars.	Goods Tender.	Express Tender.
Tank.		
Capacity of tank, ...	2100 gallons.	2650 gallons.
Fuel space, ...	3 tons coal.	4 tons coal.
Thickness of plates (sides, ends, and bottoms),	¼ in.	¼ in.
,, ,, (top), ...	$\frac{5}{16}$ in.	$\frac{5}{16}$ in.
Wheels (cast steel).		
Diameter of wheels on tread, . . .	3 ft. 9⅛ ins.	4 ft. 0 ins.
Thickness of wheels (tyres), . . .	0 ,, 3 ,,	0 ,, 3 ,,
Centre to centre of front and middle wheels,	6 ,, 0 ,,	6 ,, 0 ,,
,, ,, middle and hind ,,	6 ,, 0 ,,	6 ,, 0 ,,
Wheel-base, ...	12 ,, 0 ,,	12 ,, 0 ,,


E
nts
Capa
engh

Particulars.	Goods Tender.		Express Tender.	
Axles.				
Centres of bearings, ...	6 ft. 4 ins.		6 ft. 4 ins.	
Length ,, ...	0 ,,10 ,,		0 ,,10 ,,	
Diameter ,, ...	0 ,, 5 ,,		0 ,, 5 ,,	
,, at wheel seat, ...	0 ,, 6½ ,,		0 ,, 6½ ,,	
,, at centre, ...	0 ,, 5½ ,,		0 ,, 5½ ,,	
Frames Plates (steel).				
Distance between frames, ...	6 ,, 7⅛ ,,		6 ,, 7⅛ ,,	
Thickness of frames, ...	0 ,, ⅞ ,,		0 ,, ⅞ ,,	
Bearing Springs.				
Length (centre to centre), ...	3 ,, 0 ,,		3 ,, 0 ,,	
Number of plates (1 plate ½ in. thick, and 12 plates ⅜ in. thick × 4 ins. broad), .	13 Plates.		15 Plates.	
Camber (loaded), ...	3⅞ ins.		4¼ ins.	
Weight in Working Order.	Tons.	Cwts.	Tons.	Cwts.
Front wheel, ...	9	5	10	6
Middle ,, ...	9	1	10	1
Hind ,, ...	9	17	10	3
Total, . .	28	3	30	10

On the Highland Railway the tenders for the express engines have four bearings—two outside and two inside—to each axle. The wheels are interchangeable with those of any of the tenders in use. The following are the leading particulars of the passenger and goods engine tenders:—

Particulars.	Passenger Tender.	Goods Tender.
Tank capacity, . . .	2250 gallons.	3000 gallons.
Fuel capacity, . . .	4¾ tons of coal.	......
Wheel base, . . .	13 ft.	13 ft.
Diameter of wheels, . .	3 ft. 9½ ins.	3 ft. 9½ ins.
Weight in working order, .	31 tons 10 cwts.	36 tons.

The Great Eastern Railway standard tenders have:—

Tank capacity, ...	2640 gallons.
Fuel capacity, ...	3 tons of coal.
Wheel base, ...	12 ft.
Diameter of wheels, ...	4 ft. 1 in.
Weight in working order, . . .	30 tons 12 cwts. 2 qrs.

In America the tender frames and tanks are mounted on two four-wheel bogies, similar to those used for the engines there, excepting that the axle-boxes are outside of the wheels. The water pick-up arrangement is also used on some of the American lines.

The disposition and mode of fitting the automatic continuous brakes is fully described in the chapter on Brakes (chap. xvii.).

the brake hanger is D, and the distance of the centre of the brake-block pin from the end of the hanger is E. Also A is the area of the brake cylinder, p the effective pressure in lbs. per square inch, and P the total brake pressure.

A maximum limit is set to the useful brake pressure—that is, the aggregate pressure exerted by all the brake blocks against the wheel tyres—by the total weight of the engine, engine and tender, or train as the case may be. For, supposing the coefficient of friction between the wheels and brake blocks to be about the same as that between the wheels and rails, any brake pressure in excess of the weight of the train would obviously skid the wheels.

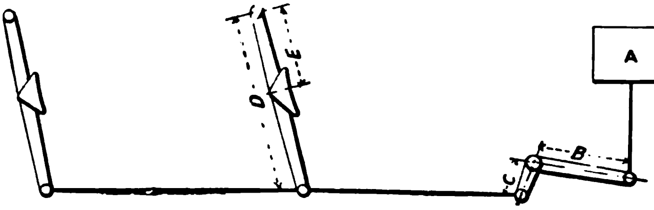

Fig. 189.

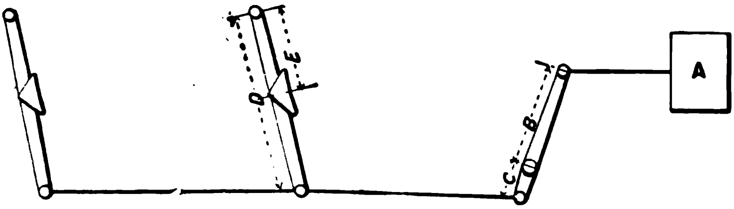

Fig. 190.

The wheels of a train, however, should never be allowed to skid, that is to say, become locked to the brake blocks; for in that case the retarding friction is considerably decreased, owing to there then being only sliding friction between the wheels and rails instead of rolling friction.

Now, a brake is most efficient when it is acting at a maximum pressure without skidding the wheels. It should be applied immediately at this maximum pressure—which depends upon the speed of the train at the instant of application—and should gradually diminish in accordance with the consequent reduction in speed. Otherwise, thé brake pressure which would not be sufficient to skid the wheels at the higher speed would easily do so at the lower speeds.

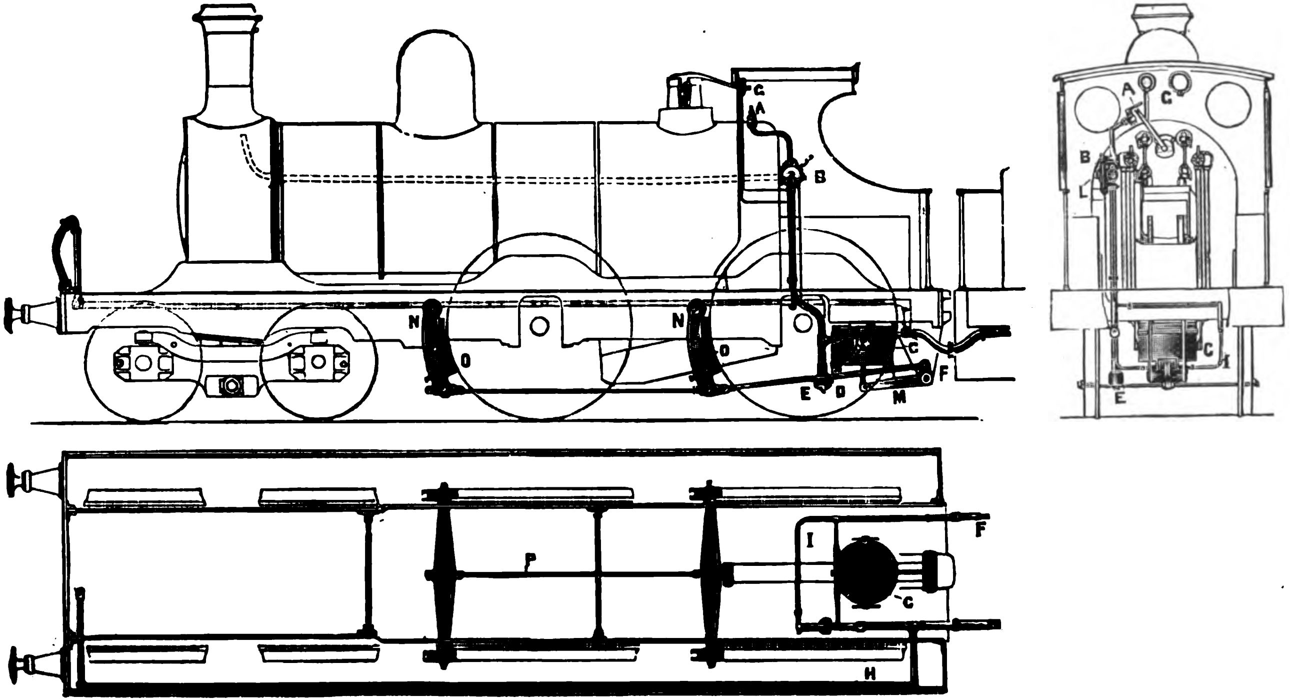

Fig. 191.—Vacuum Automatic Brake; Arrangement on Locomotive.

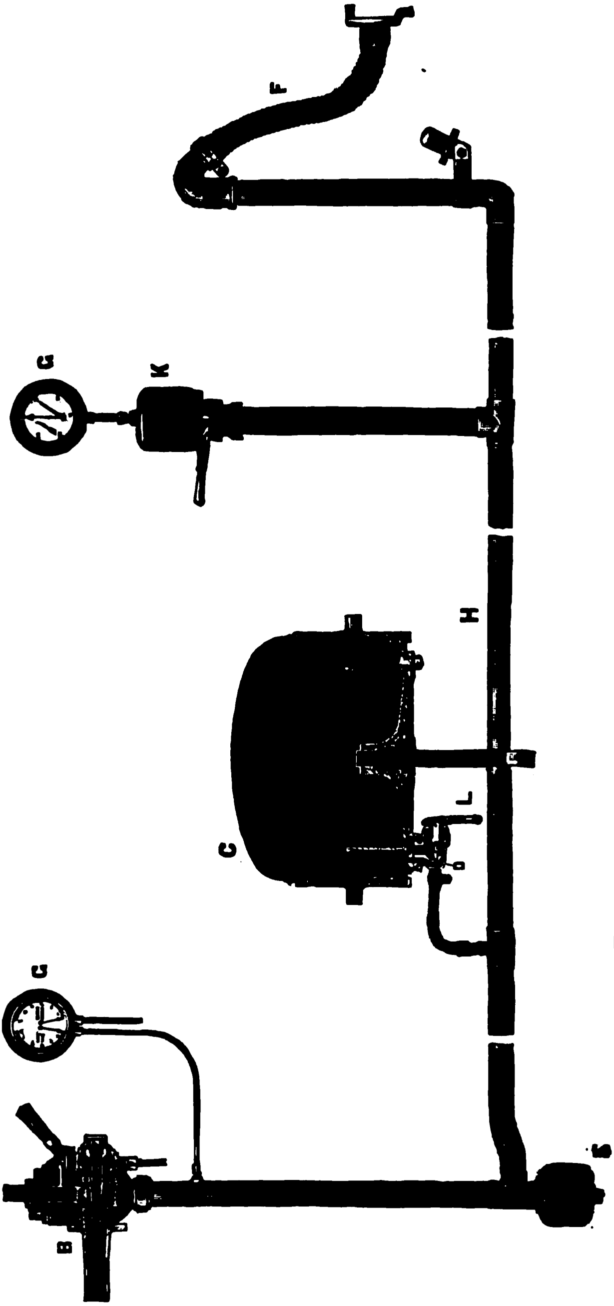

Fig. 193.—Vacuum Automatic Brake; General Arrangement.

Station stops should not be made by a violent application of the brake, but by a destruction of the vacuum of, say, from 5 to 10 ins., which should be re-created slowly as the train comes to rest, by placing the handle in "**Running position.**"

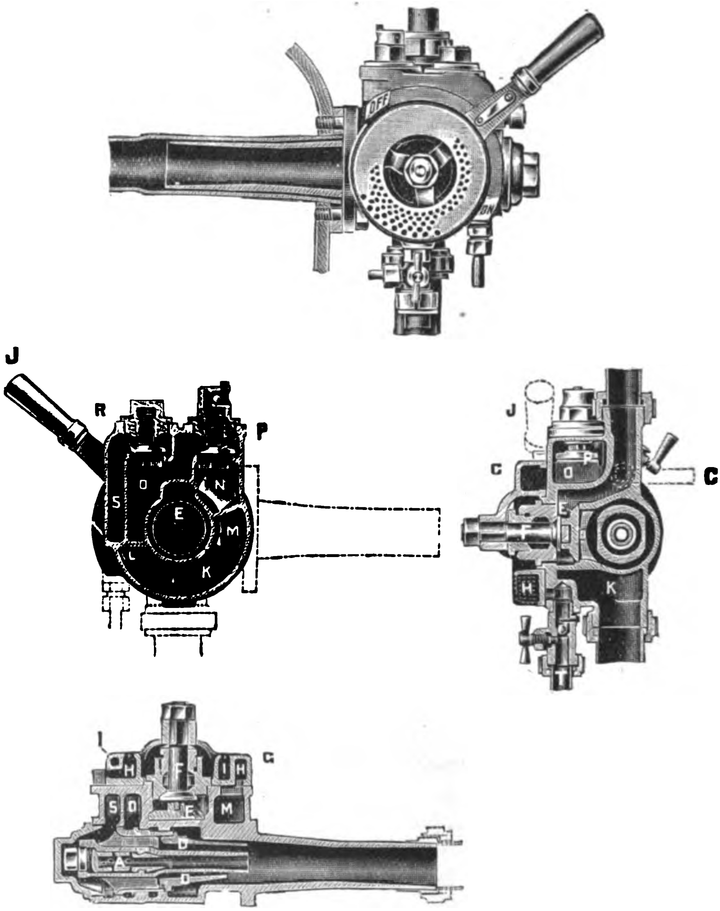

Fig. 194.—Vacuum Automatic Brake Combination Injector.

By having the vacuum nearly restored at the end of the stop, "jerking" is prevented, and the brake is released without the use of the large ejector.

To apply the brake quickly, the handle must be moved to the position marked "ON," thus opening the air-valve fully, and admitting the largest possible supply of air to the brake cylinders. If the guard finds it necessary to apply the brake he presses down is worked continuously, and is controlled by the small screw steam valve, shown just above the nozzles. This valve is adjusted to give the required vacuum.

The large ejector is worked by the admission of steam through a disc valve placed underneath the air valve, and upon the same spindle. The steam valve is opened by the driver's handle being placed in the position marked "OFF." The action of both ejectors is the same; steam is admitted around the cones and passes through the ejector barrel at a great velocity, withdrawing the air from the train pipe and cylinders, and carrying it along the exhaust pipe into the chimney of the locomotive.

To obtain the best vacuum, the admission of steam to the ejectors should be carefully adjusted, the steam valves requiring to be only slightly opened with ordinary steam pressures.

The handle has three positions; "OFF" being the position for releasing the brakes quickly, in which position, as before described, it is adjusted for admitting steam to the large ejector.

In "**Running position**" the large ejector steam valve and air valves are both closed, and the vacuum is re-established and the brake released by the small ejector only; with this adjustment also the vacuum is maintained after the brake is released. In the "ON" position the brakes are applied fully. In this position the air valve is open, and air passes freely through the holes in the disc into the train pipe, and thence to the brake cylinders. The intermediate positions between "**Running position**" and "ON" are for regulating the brake pressure by letting in more or less air. By this means it is possible either to increase the power after application, or to withdraw the air in order to diminish the power or to release the blocks.

The spindle on which the driver's handle works should be re-packed as occasion requires so as to keep it steam tight.

A small auxiliary pipe is carried from the ejector by the side of the train pipe, and is connected only to the vacuum chamber. This pipe, through the passage in the air valve, is in communication with the small ejector when the driver's handle is in the *full on* position, and thereby constantly maintains the vacuum above the engine and tender pistons. At the top of this pipe is fixed a small valve by opening which the brake can be released on the engine and tender after the steam to the ejector has been closed.

The *driver's handle* should be kept free and the air holes clean. The steam disc may be lubricated when necessary with a few drops of oil by means of the lubricating cock; tallow must never be used for the purpose. Before opening the lubricating cock the steam stop valve on the boiler must be closed.

The back stop valves in the ejector must be kept air tight; they can be easily taken out for examination. The drip pipe must be kept clear to allow any condensation of steam to run out.

The Engine Brake Cylinder.—The pattern of cylinder shown in fig. 195 is intended chiefly for use on engines and tenders, piston, and, being prevented from entering to the top by the ball, lifts the piston and so applies the brake with any desired amount of force—according to the quantity of air let in.

A drip trap and valve (E, fig. 193, p. 262) are placed on the train pipe at the bottom of the down pipe from the ejector, so that any moisture will drain into it. It is fitted at the bottom with a self-acting ball valve, which opens when the vacuum in the train pipe is destroyed and allows the water which may have collected to run out. This valve should be occasionally examined and cleaned.

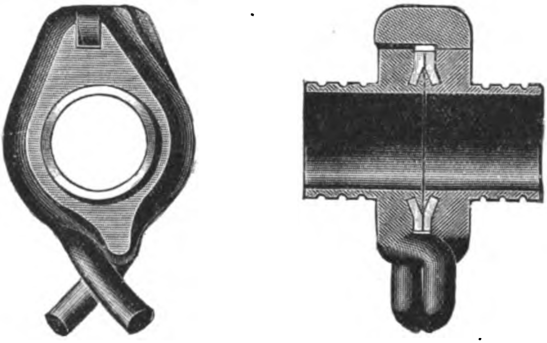

Fig. 196.—Hose Couplings.

Hose Couplings.—These, shown in fig. 196, will be readily understood by reference to the drawing. They consist of a pair of castings exactly alike, with horns top and bottom; it is impossible to couple them wrongly. To couple them they should be lifted up sufficiently high to enable the bottom horns to be placed together, and then lowered; the top lug of the one being placed in the slot of the other. To uncouple, it is simply necessary to raise the couplings, when they will separate.

The Westinghouse Automatic Brake.—The Westinghouse automatic brake is continuous throughout the train, and is operated by compressed air stored in a main reservoir on the engine, and in auxiliary reservoirs, of which one is placed upon the engine, tender, and each vehicle—all being connected by a pipe running the entire length of the train. There are also on each vehicle a *triple valve* and a brake cylinder, having a piston connected to the brake levers.

Maintaining the pressure in the brake pipe keeps the brakes off; but letting the air escape from the pipe, purposely or accidentally, instantly applies the brakes by allowing air to pass from the small reservoirs into the brake cylinders.

General Arrangement.—The Westinghouse brake as applied to engines and tenders is shown in fig. 197. The locomotive is provided with a vertical direct-acting air pump, having a steam cylinder, A, and air cylinder, B, with the usual valves, which is driven by steam from the boiler. This pump forces air into a main reservoir, C, of 10 to 15 cubic feet capacity, preferably fastened beneath the footplate, or in any other suitable position. The above parts are shown on enlarged scale, somewhat diagrammatically, in fig. 198 (see Plate). A duplex gauge (L in the latter figure) shows

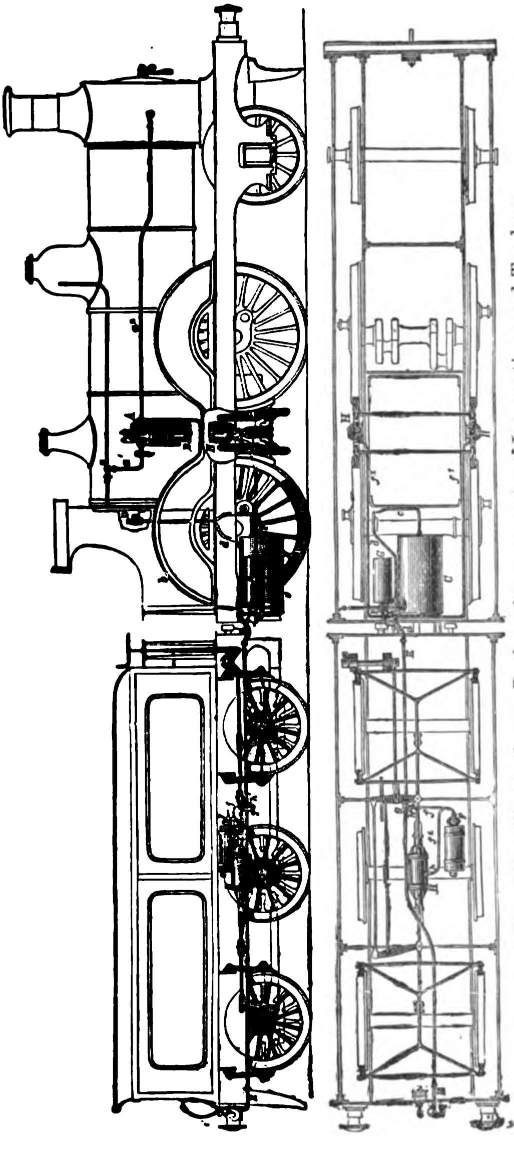

Fig. 197.—Westinghouse Brake: Arrangement on Locomotives and Tenders.

the pressure of the air in the brake pipe, or auxiliary reservoir, G, and in the main reservoir. A steam cock, *a*, reverting to fig. 197, governs the flow of steam to the pump and regulates its speed, and, consequently, the pressure of air in the main reservoir.

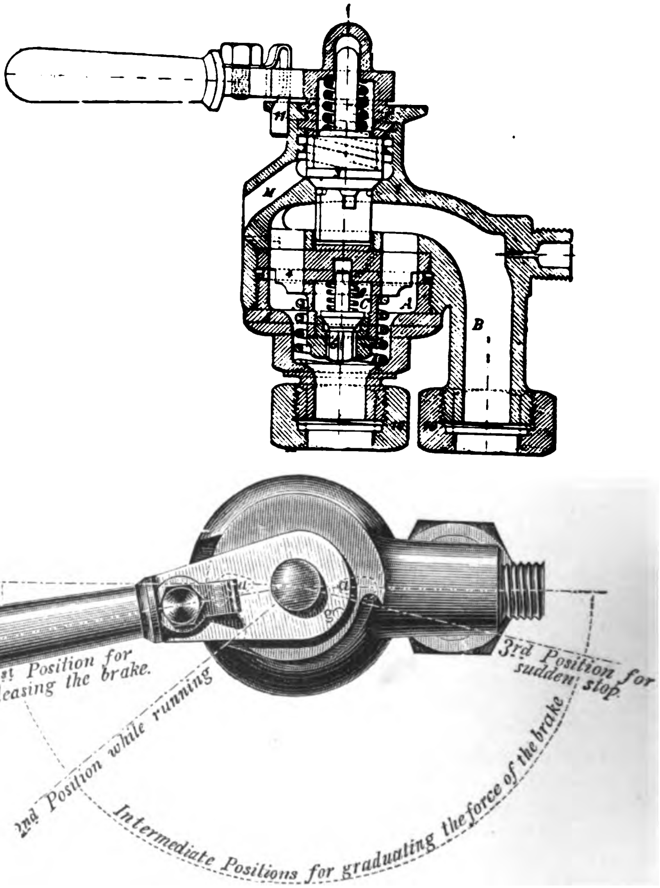

Fig. 199.—Westinghouse Brake: Ordinary Driver's Valve.

A driver's brake valve, shown in detail in fig. 199, and marked D in figs. 197 and 198 (to which the following letters refer), has one pipe connection, *c*, to the main reservoir, and a second connection, *d*, to the brake pipe, E, running the entire length of the train. This brake valve regulates the flow of air for applying and releasing the brakes, and, in its normal position, maintains from 20 lbs. to 30 lbs. per square inch more pressure in the main reservoir than in the brake pipe.

The air delivery pipe, *b*, leading from the air cylinder, B, of the pump, to the main reservoir, C, should enter the latter somewhat below the middle, and a separate pipe, *c*, must be taken from the top part of the main reservoir to the brake valve, D. Continual trouble would be experienced if the pipe *c* were branched from the air delivery pipe *b*, since grease or dirt entering by the pump, would pass directly into the main pipe and the valves, instead of collecting in the main reservoir. Deposits can easily be removed from the latter by unscrewing the bottom plug. The driving-wheel brake blocks are generally operated by two brake cylinders, H, H (fig. 197), which are placed on either side of the engine. Another arrangement is sometimes adopted, in which a 10-in. or 13-in. vertical brake cylinder, by means of suitable brake gear,

---

INDEX TO FIGS. 197, 198, AND 200.

Westinghouse Automatic Brake.

A Steam cylinder and
B Compressing cylinder of air pump, by which air is forced into
C Main reservoir on engine.
D Driver's valve, by which the action of the brake is regulated.
E Main or brake pipe running whole length of train.
F Triple valve.
G Auxiliary reservoirs.
H Brake cylinders.
K Pipe coupling between vehicles.
L Gauges showing pressures in brake pipe and main reservoirs.
N Coupling cock for closing brake pipe when vehicles are disconnected.
S Guard's pressure gauge.
T Guard's brake valve.

The following references occur in fig. 197 *only.*

a Steam cock controlling supply of steam to air pump through pipe a^1.
a^2 Exhaust pipe of steam air compressor.
b Air delivery pipe from pump to main reservoir.
c Pipe leading from driver's valve to main reservoir C.
d ,, ,, ,, brake pipe E.
f Branch pipe from brake pipe E to triple valve F, provided with cock h^1.
f^1 Pipe from triple valve to brake cylinder.
g "Drip cock" for trapping any water that may get into brake pipe.

INDEX TO FIG. 199.

Driver's Valve.

A Branch to main reservoir.
B Branch to main or brake pipe.
4 Large ports from branch A to branch B.
6 Pressure reducing valve loaded to about 20 or 30 lbs. per square inch.
3 Air escape valve—
    1st position of handle: free communication through large ports 4.
    2nd ,, ,, air must pass through valve 6.
    3rd ,, ,, and positions intermediate between this and 2nd position; load more or less removed from valve 3, which lifts accordingly, allowing air to escape at M from brake pipe.

by re-opening the passage from the main reservoir, C, to the brake pipe, E. This restores the pressure in the brake pipe, and returns the pistons of the triple valves, F, to their original position, which allows the auxiliary reservoirs, G, to become recharged. At the same time the air from the brake cylinders, H, is exhausted, thus relieving the brake blocks from pressure.

"*Quick-acting*" *Westinghouse Brake.*—The above general description not only serves for the "ordinary" Westinghouse brake, but also for the improved "quick-acting" Westinghouse brake.

The difference in the two brakes is simply in the action of their triple valves, by means of which, on each vehicle, the application and release of the brake is governed in accordance with the variations of pressure produced in the brake pipe.

When the ordinary Westinghouse brake is brought into action by discharging air from the brake pipe through the driver's valve, this immediately causes a reduction of pressure in the brake pipe of the engine and the next vehicle, but it requires a certain amount of time—corresponding to the length of the train—for the reduction of pressure to travel along to the rear end of the train, and so bring all the brakes into operation.

On trains of ordinary length this does not lead to any inconvenience, the reduction of pressure being transmitted over the whole of the train with sufficient rapidity to produce throughout a practically simultaneous action of the brakes. But in trains of extraordinary length, such as those employed for the conveyance of goods, and composed of 40 or 50 vehicles, extending over some 1500 or 2000 feet, an appreciable time elapses before the main pipe can so far evacuate its contents as to bring into operation the brake on the farthest vehicle. During all this time the brakes at the head of the train are applied, thus causing unequal action, which must result in very severe shocks, liable to damage the rolling stock and its contents.

This difficulty has been overcome by the quick-acting brake (fig. 200, see plate), the simultaneous action of which on all the vehicles, avoids shocks or jerks, even when the brakes are applied with full force, as in a case of emergency.

With the ordinary triple valve, when the brake is applied with moderate force, its piston moves down only about one-half its full stroke; whereas it moves to the limit of its stroke when the brake is brought into action with full force. It is this second part of the stroke which, in the new quick-acting triple valve, has been utilised to establish a communication between the brake pipe and the brake cylinder, thus producing the following improved action:—

When the driver opens the brake valve, and the air escapes rapidly from the brake pipe until the pressure is sufficiently reduced to operate to the full extent the triple valve on the first vehicle, a large communication is established between the train pipe and the brake cylinder of that vehicle, and for a fraction of a second this is held open to permit the air to enter the brake cylinder. This discharge of air from the brake pipe into the brake cylinder has the effect of suddenly reducing the pressure in the brake pipe near the next triple valve, the piston of which immediately moves to the full extent of its stroke, thus opening another passage for discharge of air into its own brake cylinder. And so this process runs on through the train—like an explosion along a train of gunpowder. Each vehicle accordingly provides for the evacuation of its own length of pipe, and the air contained in it is let out locally, instead of having to thread its way to the end of a long brake pipe, with its many bends and consequent friction, in order to be discharged on the engine as in the case of the ordinary brake.

Air Pressure; Cylinders.—Elaborate experiments have demonstrated that the higher the speed of the train, the greater must be the initial brake pressure to effect the quickest stop. A brake pipe pressure of from 75 lbs. to 80 lbs. per square inch is, therefore, recommended for fast trains, and a somewhat lower pressure for slower and stopping trains. The pressure can easily be varied by regulating the speed of the pump. High pressure permits the use of small cylinders, reservoirs, and pipes.

Brake, Steam, and Air Pipes.—The brake pipe for ordinary trains may be of 1 in. steam pipe. If, however, it is intended to work trains of great length, say of 40 or more vehicles, by means of the quick-acting brake, the diameter of the brake pipe must be increased to 1¼ ins. diameter, and the bends in the pipe at the ends of the vehicles must be avoided.

For piping used on engines and tenders the following particulars may prove of service:—The brake pipe should always be iron steam pipe of best quality, of 1 in. internal diameter. The steam pipe a^1, air delivery pipe b, pipe c from main reservoir to brake valve, and pipe d from brake valve to main pipe, if of iron, should be of 1 in. best steam pipe, or 1⅛ in. outside diameter solid drawn copper pipe with a thickness of No. 10 S.W.G. The exhaust pipe a^2 may be of 1¼ ins. iron steam pipe, or 1½ ins. outside diameter solid drawn copper pipe with a thickness of No. 10 S.W.G., enlarged to 2 ins. or 2½ ins. in the smokebox to deaden the noise. For the same purpose, the pump exhaust is sometimes turned into the exhaust of the engine with very good results; and in the other cases special exhaust quieting chambers are used.

Red lead must not be used on the inside of any fittings. All pipes must be blown out with steam after bending, to remove scale and dirt. Blowing through with compressed air alone is not sufficient.

Working of Brakes with Pilot Engines.—When trains are worked by means of a pilot engine, the brakes should be under the control of the driver of the front engine, and for this purpose it is necessary that a cock should be introduced into the pipe leading from the main reservoir to the brake valve, as shown. Whenever two engines are used for working a train, the driver of the second engine must, immediately after the attachment of the pilot, close the cock under the driver's valve, and keep it closed so long as he has the assistance of the pilot. During this time the handle of the driver's valve must be kept in the release position, and the maximum pressure be maintained in the main reservoir of the second engine, so that the driver of this engine may be ready at any time to take charge of the brakes on the train, if necessary. The cock under the brake valve of the second engine must, of course, be re-opened so soon as the pilot engine is removed.

CHAPTER XVIII.

LUBRICATION.

CONTENTS.—Difficulties presented by the Lubrication of Locomotives—Sight-feed Lubricator—Displacement or Roscoe Lubricator—Furness Lubricator—Oil-boxes and Pipes for Piston-rods, Valve Spindles, Axle-boxes, &c.—Lubricating Slide Bars—Lubricating Eccentric Straps, and Connecting- and Coupling-rods—Consumption of Oil.

THE lubrication of locomotive engines presents difficulties different from those that arise in the lubrication of other engines and machines. The difficulty exists rather in devising suitable and convenient methods of application than in the selection of a satisfactory lubricant.

The importance of having the valves and cylinders well and properly lubricated is so fully recognised as not to require demonstrating. Not only is it necessary that the valves and pistons should work with as little friction as possible, but it is also most important that the lubricant used should possess no chemical properties that will detrimentally affect those iron parts with which it may come in contact. In the practice of lubrication, lubricators play no unimportant part. Good lubrication can seldom be secured even when a good lubricant is used unless it is applied through the medium of a good lubricator. Again, the action of a good lubricator may be impaired should it be improperly fixed or adjusted.

Sight-feed Lubricator.—For the lubrication of the valves the sight-feed lubricator is now almost in general use. There are many different makes; those that are the simplest in construction and will use both light- and heavy-bodied oils are the best.

Fig. 202 illustrates a sight-feed lubricator, which supplies a steady and regular quantity of oil to the steam-chest for the slide valves at rates varying from 1 to 120 drops per minute.

The condensation-chamber is contained in the body of the lubricator, thus doing away with the usual condensation pipe or coil.

A convenient place for fixing the lubricator is on the weather-board or side plate of the cab. A $\frac{3}{8}$-in. internal diameter steam pipe is brought from the highest convenient part of the boiler and coupled on to A; a pipe of the same diameter is taken from the steam-chest or steam pipe close to the steam-chest and coupled on to B.

The coupling or union in the steam pipe or steam-chest should project through at least $\frac{5}{8}$ of an inch, so as to deliver the oil clear of the side, as shown at A (fig. 203), and *not* as shown at B. If the plan shown in A is not adopted, the drops of oil, instead of being carried forward in spray amongst the steam and thoroughly lubricating it, are liable to be forced round the sides of the pipe or steam-chest.

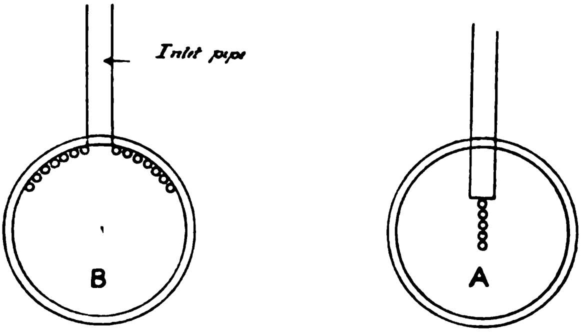

Fig. 203.—Method of Spraying the Oil.

Directions for Working the Sight-Feed Lubricator.

1st. Close all valves.

2nd. Completely fill the oil-chamber through F, and after replacing the screw and plug, turn on steam from the boiler, which will fill the sight glass with water.

3rd. Open back pressure-valve C a little, and then slightly open regulating valve D, and regulate the number of drops necessary; two to four drops per minute are sufficient for locomotives.

4th. When requiring to refill, close all valves, slacken back valve F, let out condensed water through valve E, and refill through F.

Displacement or Roscoe Lubricator.—Another lubricator which is considerably used is the "displacement" or "Roscoe" lubricator, shown in fig. 204. It is filled with oil through the valve A. This valve is then closed, and the valve B, leading to the steam chest is opened; as the steam condenses on the surface of the oil, the water sinks and raises the oil, which then flows through the valve B, to the steam chest. The quantity of oil passing to the steam chest can be regulated by the wheel C, attached to the valve B. The valve D, at the bottom of the lubricator, is for letting out the condensed water. A form of displacement lubricator suitable for valve-spindles is shown on page 102.

Furness Lubricator.—The "Furness" lubricator, frequently used for cylinder lubrication, is shown on fig. 205. It is attached to the top of the cylinder, or the centre of the cylinder cover, at A. When the steam is in the cylinder the small valve B is kept closed by the steam pressure; but when the steam is shut off, and the

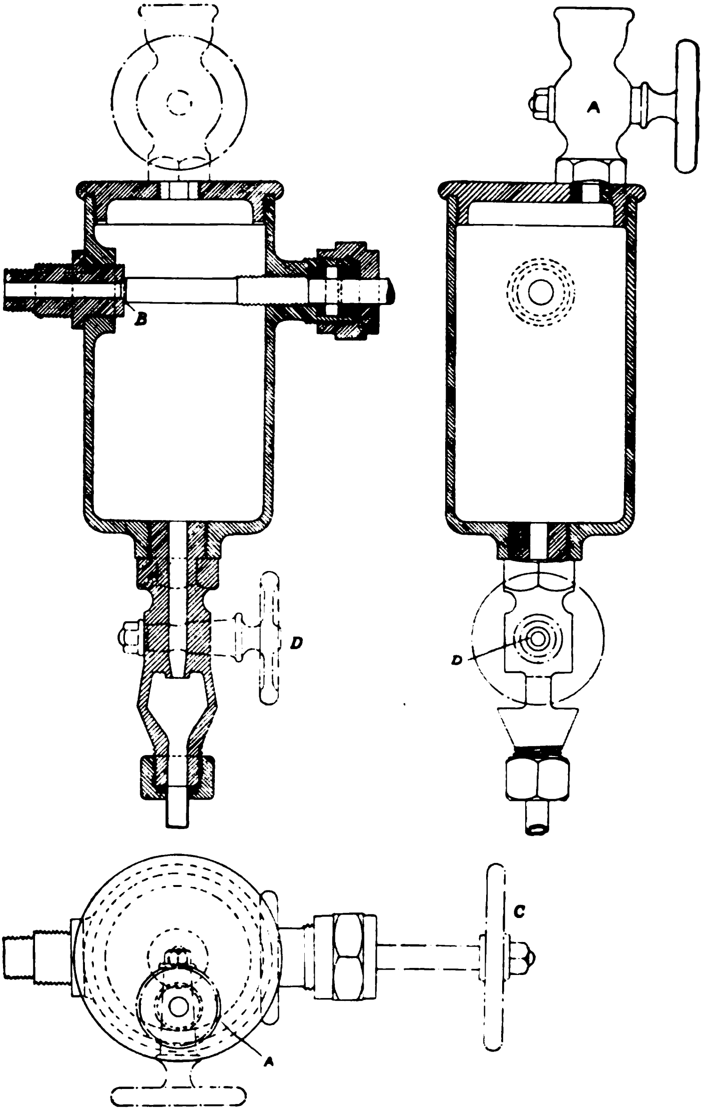

Fig. 204.—Displacement or Roscoe Lubricator.

engine is working, the valve lifts about $\frac{1}{16}$ in. at each stroke of the piston, by suction, admitting a small quantity of oil. The lubricator is filled at the plug C.

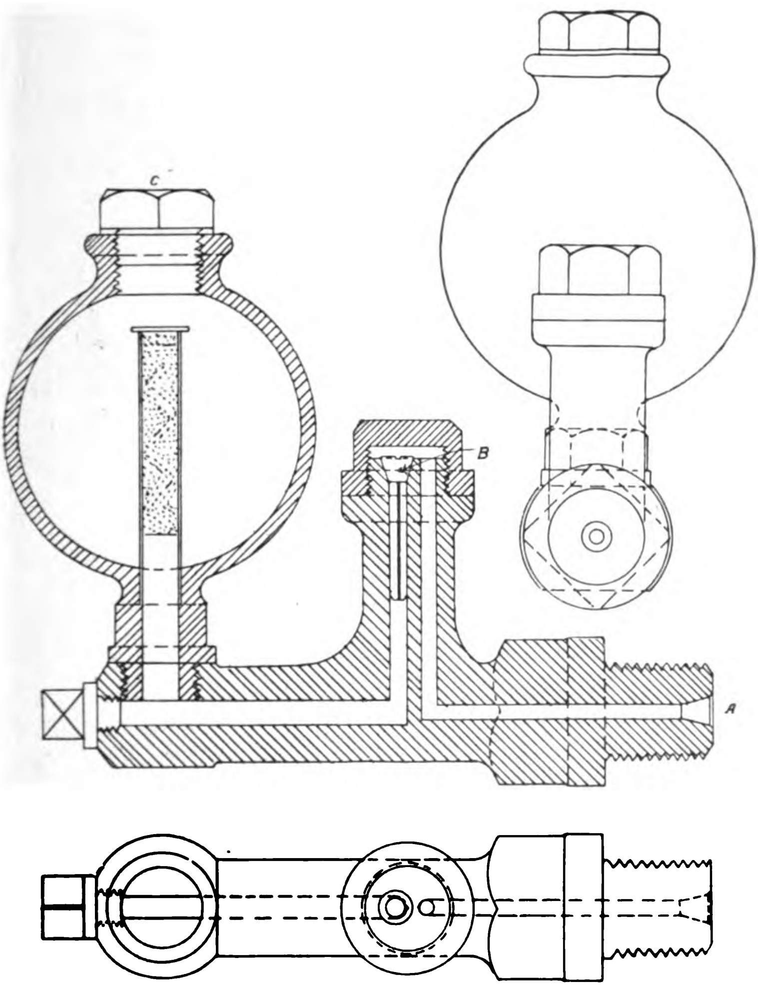

Fig. 205.—Furness Lubricator.

Oil-boxes and Pipes for Piston-rods, Valve Spindles, Axle-boxes, &c.—The most economical system of lubricating the several parts of the locomotive is by means of lubricating boxes. These can be used with one, two, or three lubricating pipes, as shown in figs.

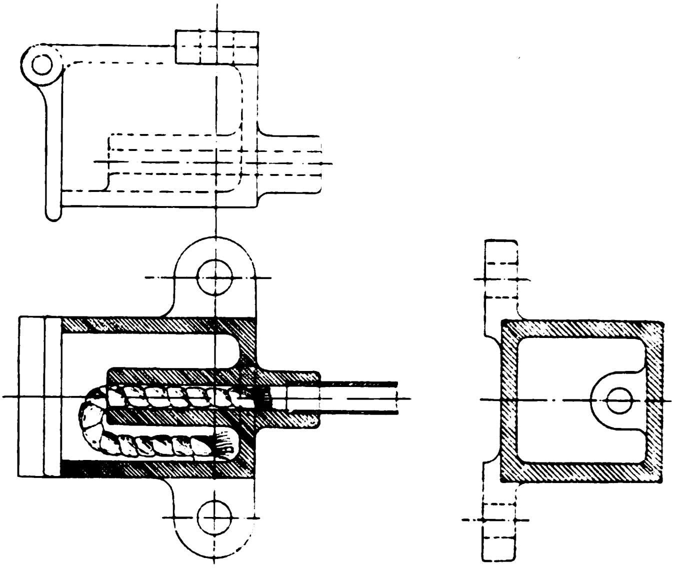

Fig. 206.—Lubricating Box with One Pipe.

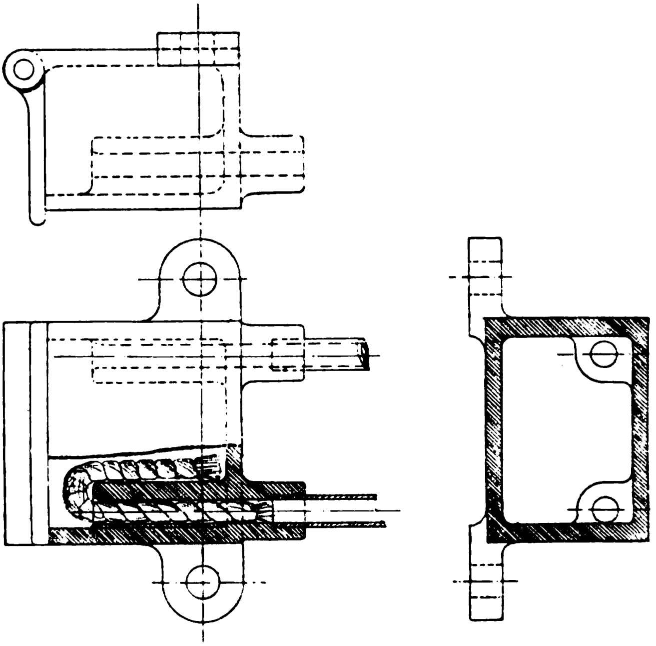

Fig. 207.—Lubricating Box with Two Pipes.

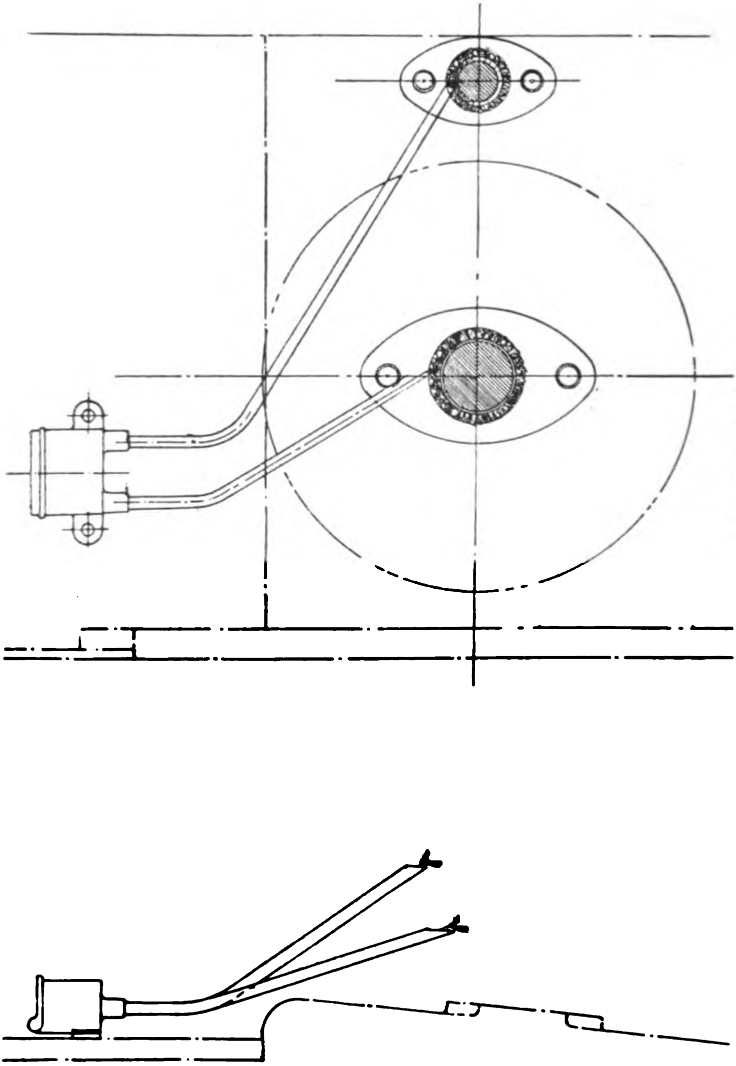

Fig. 209.—Position of Lubricating Boxes.

single slide-bars, holes are drilled through the bars with large shallow countersinks as shown in fig. 76.

Lubricating Eccentric Straps and Connecting- and Coupling-rods.—A method of lubricating eccentric straps is shown in fig. 212, a similar arrangement of top spring and tube being also used for connecting-rod big ends, and coupling-rod brasses and bushes, an arrangement which keeps the oil from being thrown out when the parts are working at high speeds.

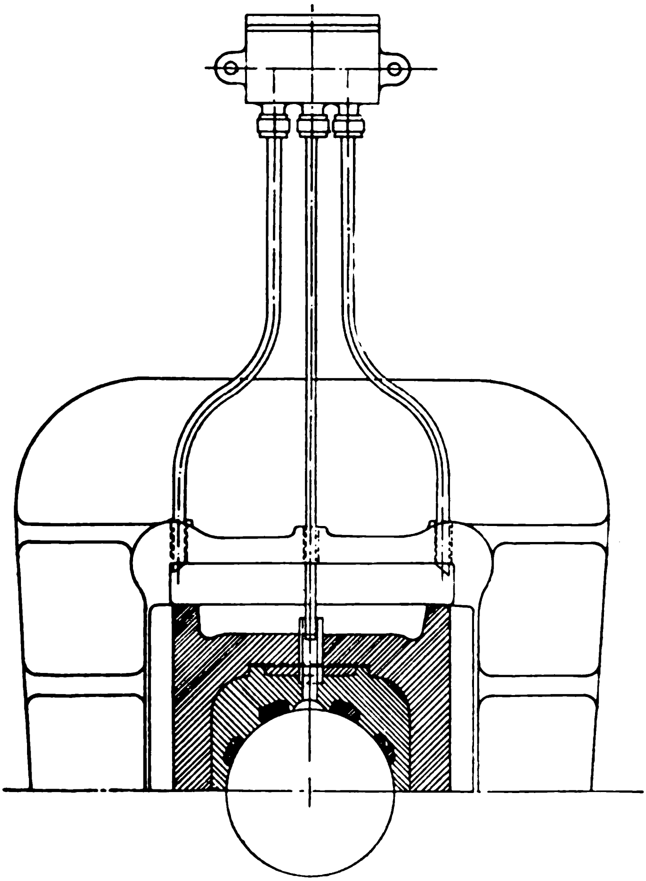

Fig. 210.—Application of Three-Pipe Oil-boxes.

The Consumption of Oil varies according to the work done; the average quantity of cylinder oil used being from ·35 to ·5 quart, and of engine oil from 2 to 3 quarts per 100 miles.

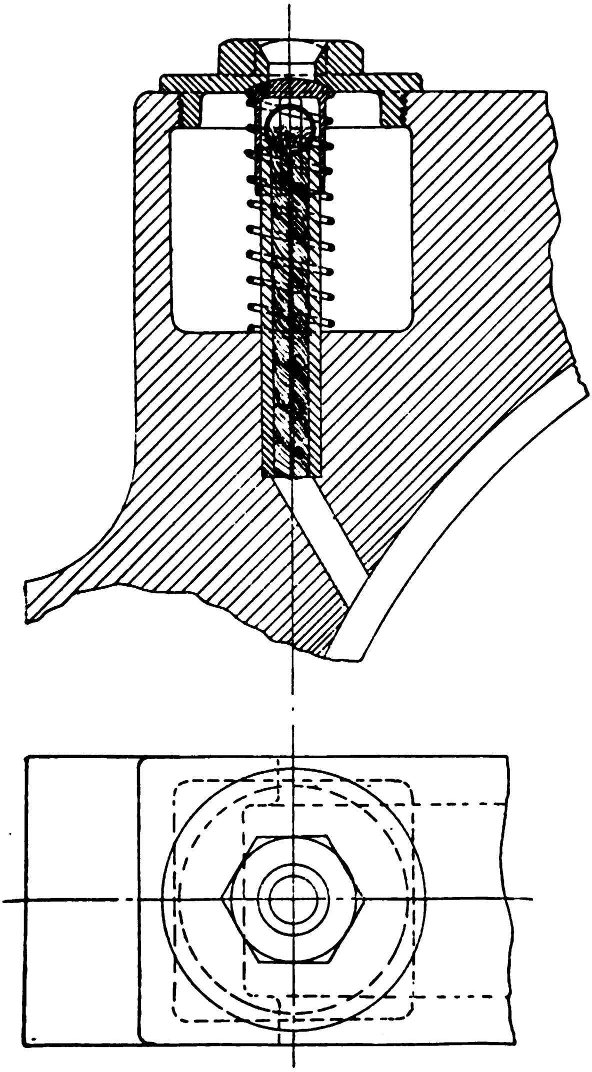

Fig. 212.—Method of Lubricating Eccentric Straps, and Connecting- and Coupling-rods.

CHAPTER XIX.

CONSUMPTION OF FUEL, EVAPORATION, AND ENGINE EFFICIENCY.

CONTENTS.—Particulars of Engine Tested—Trial from London to Bournemouth—Trial from Bournemouth to London—Trial from London to Exeter—Trial from Exeter to Woking—Trial from London to Salisbury—Means employed in Observations.

IN this chapter is described a series of trials of an express locomotive,* in which the coal consumption, evaporation, power developed, and other particulars were accurately observed. The means employed in taking the diagrams and making the observations are also described. The results are examined, and determinations as to the engine and boiler efficiencies are arrived at. The trials were made with the locomotive at its regular duty, and under ordinary circumstances.

Particulars of Engine Tested.—The engine upon which the trials were made was one of twenty built for the London and South-Western Railway Company, at their Nine Elms Works, for working the heavy main line express trains between Waterloo, Salisbury, Southampton, and Bournemouth. These engines run from Waterloo to Basingstoke, a distance of 48 miles, easily under the hour, and, during the summer months they run the 84 miles to Salisbury and the 104 miles to Christchurch without a stop. It is not intended to give a detailed description of the engines here, but a few particulars will aid in the understanding of the results of the trials.

They have four wheels coupled, and a four-wheeled bogie. The cylinders, placed outside, are 19 ins. in diameter, and have a stroke of 26 ins., the clearance being equivalent to 7·74 per cent. at the front, and 6·63 per cent. at the back end of the stroke. The slide valves have 3⅝ ins. travel, and ⅛ in. lead when in full gear, and 1 in. outside lap. The coupled driving-wheels are 7 ft. 1 in. diameter, and the bogie and tender wheels are 3 ft. 9¾ ins. diameter. The frames, of mild steel, are 1 in. thick. The boiler barrel is 11 ft.

---

* An account of these trials appears in the *Proceedings of the Inst. of Civil Engineers*, vol. cxxv.; session 1895-96.

long, and 4 ft. 4 ins. in diameter outside; the thickness of the plates of mild steel is ½ in.; the length between tube-plates is 11 ft. 4 ins.; and there are 240 tubes of 1¾ ins. diameter outside; and the height of the boiler from the centre of the rails is 7 ft. 9 ins. The firebox is of copper, 5 ft. $6\frac{7}{16}$ ins. long at the top, and 5 ft. 7⅞ ins. at the bottom, the height being 5 ft. 9½ ins. to the bottom of the foundation ring, and 5 ft. 7 ins. to the top of same. The width is 3 ft. 6 ins. at the top, and 3 ft. 2½ ins. at the bottom. The plates are ½ in. thick, except the tube-plate, which is 1 in. thick. The heating surface of the firebox is 112·45 sq. ft. (= 16,192·1 sq. ins.); of the tubes, 1246·2 sq. ft. (= 179,452·8 sq. ins.); the total heating surface is 1358·65 sq. ft. (= 195,644·9 sq. ins.); and the grate area is 18·14 sq. ft. The ratio of total heating surface to grate area is 74·9 to 1. The area through the tubes is 2·47 sq. ft., and the area through firebars, 5·8 sq. ft. The working boiler pressure is 175 lbs. per sq. in. The weight on the driving-wheels was 14 tons 19 cwts., or 33,488 lbs.; on the trailing-wheels, 14 tons 16 cwts., or 33,162 lbs.; and on the bogie, 18 tons 17 cwts. 2 qrs., or 42,280 lbs.; the weight of the tender full of water, and with 2 tons of coal, was 33 tons 8 cwts., or 74,816 lbs.; and the total weight of the engine and tender in working order was 82 tons 0 cwt. 2 qrs., or 183,736 lbs. The weight per foot of wheel-base was 1·853 tons. The total wheel-base of the engine and tender is 44 ft. 3⅛ ins.; the extreme length over buffers, 53 ft. 8⅝ ins.; the distance from the front of the buffers to centre of bogie, 8 ft. 4¾ ins.; from centre of bogie to centre of driving-axle, 10 ft. 9 ins.; from centre of driving-axle to centre of trailing-axle, 8 ft. 6 ins.; and from centre of trailing-axle to back of frame, 4 ft. 3 ins. The total available capacity of the tender water-tank is 2908 gallons.

Steel castings are used as much as possible in the construction of these engines, the following details being made of this material, thus dispensing with intricate and difficult forgings:—driving-, trailing-, and bogie-wheels, all bogie-castings, pistons, crossheads, motion-plates, all hornblocks, spring-hanger brackets, &c., &c.

The engines are fitted with the automatic vacuum and steam brakes, and also with Adams' patent vortex blast pipe.*

Trial from London to Bournemouth.—Five trials were made: the first—to which figs. 213, 214, and 215 have reference—was run on 9th July, 1891, from Waterloo with the 5.50 a.m. down train to Bournemouth, a distance of 111 miles, with eleven intermediate stops. The load hauled, exclusive of engine and tender, and with no allowance for passengers and luggage, was from Waterloo to Woking, 24⅜ miles, 239 tons 17 cwts. 3 qrs.; from Woking to Basingstoke, 23⅜ miles, 217 tons 6 cwts. 3 qrs.; from Basingstoke to Eastleigh, 25¾ miles, 166 tons 16 cwts.; from Eastleigh to Brockenhurst, 19 miles, 135 tons 15 cwts. 2 qrs.; and from Brockenhurst to Bournemouth, 18½ miles, 116 tons 16 cwts.

* For a fuller description of the engine see Appendix A.

RESULTS OF THE FIRST TRIAL.

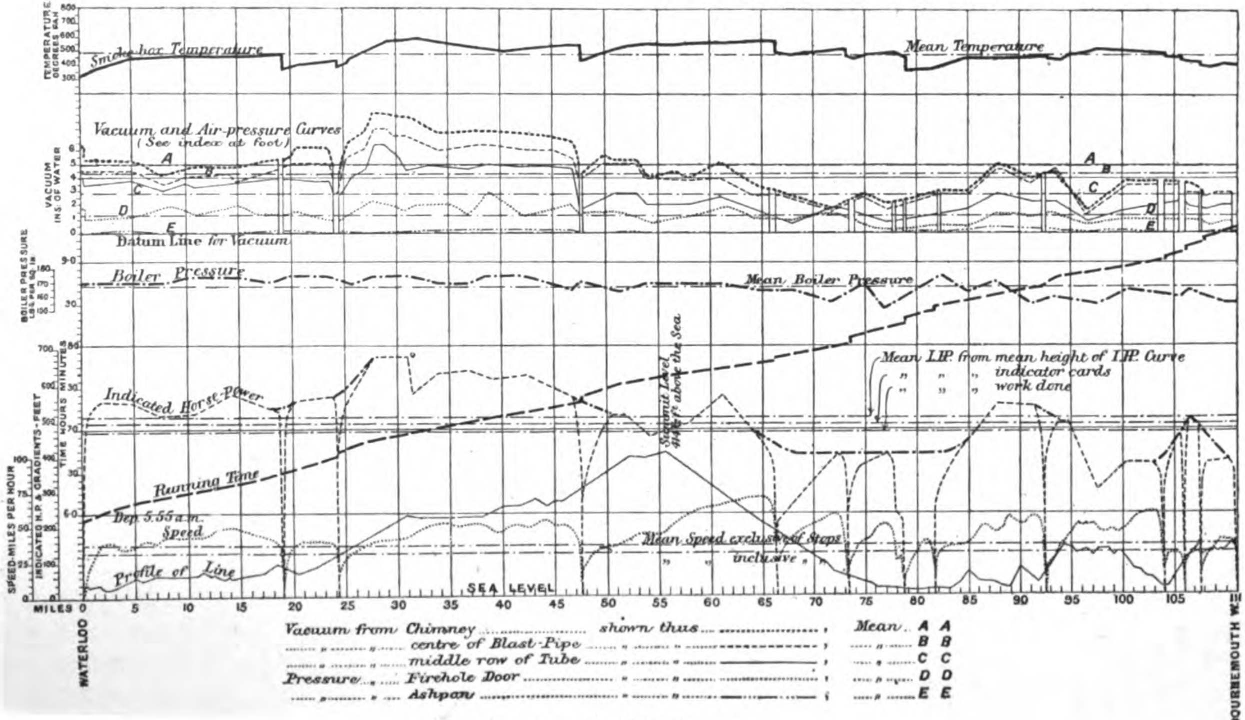

Fig. 213.—Record of Engine Performance.

running time was 1136·4 lbs. exclusive of lighting up, and 1192·6 lbs. inclusive. This gives 62·54 and 65·61 lbs. respectively per square foot of grate area per hour running time, 53·7 and 56·36 lbs. respectively journey time, and 2·31 and 2·65 lbs., exclusive and inclusive of lighting up respectively, per indicated horse-power per hour running time, which is equivalent to 1·98 and 2·32 lbs., exclusive and inclusive of lighting up respectively, journey time.

The coal burnt per train mile exclusive of lighting up was 30·5 lbs., and inclusive ot lighting up 32·1 lbs.; the coal burnt per engine mile exclusive of lighting up 29·5 lbs., and inclusive of lighting up 31·0 lbs.

The water evaporated per hour journey time was 9442·1 lbs., or, taking the running time, 11,000 lbs. The water evaporated per square foot of total heating surface per hour taking journey time was 6·95 lbs., and taking running time was 8·09 lbs.; the water evaporated per indicated horse-power per hour running time was 22·4 lbs.; the water evaporated per lb. of coal, exclusive of lighting up, was 9·68 lbs., and inclusive of lighting up 9·63 lbs.; from feed temperature 9·68 lbs.; and the equivalent from and at 212° Fah. 11·35 lbs. The temperature of the water in the boiler at the time of lighting up was 205° Fah.

With regard to forced draught, special observations were made during each journey of the vacuum and pressures obtained at the base of the chimney, in the smokebox on a level with and in the centre of the blast pipe, and at the middle of the middle row of tubes, through the firehole door, and in the ashpan. The vacuum in inches of water was as follows :—At base of chimney, maximum 1·5 ins., mean 4·93 ins.; level with top and in centre of vortex blast pipe, maximum 7·5 ins., mean 4·34 ins.; at middle of middle row of tubes, maximum 6·2 ins., mean 2·84 ins. The maximum pressure in inches of water through the firehole door was 2·8 ins., and mean 1·25 ins.; and in the ashpan, maximum 0·5 in., mean 0·08 in.

The diameter of the gases-pipe of the blast pipe was 5 ins., the area 19·6 sq. ins., and the area of the annular exhaust was 13·9 sq. ins., and its width $\frac{11}{16}$ in. The temperature of the gases in the smokebox was also taken at one mile intervals, the maximum being 585° Fah. and the mean 488·91° Fah. The temperatures below 680° Fah. were registered with a mercury thermometer, and above 680° Fah. with a mercury thalpotassimeter.

The weather was fine with strong head wind.

The coal stated includes that used while standing for 3½ hours. Particulars are given in Table XV.

Trial from Bournemouth to London.—The second trial extended over the return journey from Bournemouth to Waterloo on the same day, the departure time being 1.55 p.m. Three intermediate stops were made in addition to stopping at Vauxhall. The load hauled, exclusive of engine and tender, and with no allowance for weight of passengers and luggage, was :—Bournemouth West to Bournemouth East, 3½ miles, 89 tons 11 cwts. 2 qrs.; and from Bournemouth East to Waterloo, 107¾ miles, 137 tons 11 cwts. 2 qrs. The mean load throughout the journey was thus 136 tons 3 cwts. 2 qrs.

The maximum speed attained was 67 miles per hour on a down gradient of 1 in 386 between the twenty-third and twenty-fourth mile post from Waterloo. The indicated horse-power, taken immediately after this observation, at 66 miles per hour, being 571·6, with a steam cut-off 17 per cent. of the stroke; the number of revolutions per minute being 201. The mean speed exclusive of stops was 45·23 miles per hour.

The maximum indicated horse-power was 610·1, with a steam cut-off at 26 per cent. on an up gradient of 1 in 249 at the sixtieth mile post, the speed being 43 miles per hour, and the number of revolutions 179 per minute. The mean boiler pressure throughout the journey was 167·2 lbs. per square inch.

The journey occupied 2 hours 41 minutes, the actual running time being 2 hours 27¼ minutes.

The coal burnt per hour journey time was 1162·83 lbs. exclusive of lighting up, and 1231·2 lbs. inclusive of lighting up. Taking running time, the coal burnt per hour was 1270·8 lbs. exclusive of lighting up, and 1339·3 lbs. inclusive, which gives 70·0 and 73·78 lbs. respectively per square foot of grate area per hour running time, and 64·1 and 67·35 lbs. respectively journey time. This is equivalent to 2·61 and 2·75 lbs., exclusive and inclusive of lighting up respectively, per indicated horse-power per hour running time; and to 2·39 and 2·52 lbs., exclusive and inclusive of lighting up respectively, journey time. The coal burnt per train mile exclusive of lighting up was 28·1 lbs., and inclusive of lighting up 29·6 lbs.; and the coal burnt per engine mile exclusive of lighting up was 27·13 lbs., and inclusive of lighting up 28·6 lbs.

The water evaporated per hour journey time was 10,214·0 lbs., or taking the running time 11,167 lbs.; the water evaporated per square foot of total heating surface per hour taking the journey time was 7·51 lbs., running time 8·22 lbs.; the water evaporated per indicated horse-power per hour, taking running time was 23·02 lbs.; the water evaporated per lb. of coal, exclusive of lighting up, was 8·78 lbs., inclusive of lighting up 8·34 lbs; from feed temperature 8·78 lbs., and equivalent from and at 212° Fah. 10·3 lbs. The temperature of the water in the boiler at the time of lighting up was 205° Fah.

The vacuum in inches of water was as follows:—At base of chimney, maximum 11·0 ins., mean 6·43 ins.; level with the top and in centre of blast pipe, maximum 7·1 ins., mean 4·1 ins.; at middle of middle row of tubes, maximum 5·8 ins., mean 3·34 ins. The maximum pressure in inches of water through the firehole door was 2·2 ins., mean 1·36 ins.; and in the ashpan, maximum 0·2 in., mean 0·07 in. The temperature of gases in the smokebox, taken every mile, was 575° Fah. maximum, and 494·76° Fah. mean. The coal stated includes that used while standing for 5⅓ hours.

Trial from London to Exeter.—The third trial was run on 10th July from Waterloo with the 11.0 a.m. down train to Exeter, a distance of 171½ miles with three intermediate stops. The load hauled, exclusive of engine and tender, and with no allowance for the weight of passengers and luggage, was 168 tons 7 cwts. 2 qrs.

The steepest up gradient was 1 in 70 for ½ mile, and 1 in 80 for 4 miles continuously. The maximum speed attained was 78 miles per hour, whilst running on a down gradient of 1 in 100 at the fifty-eighth mile post. The indicated horse-power was 517·2, with a steam cut-off at 17 per cent. of the stroke, the number of revolutions being 309 per minute. The mean speed exclusive of stops was 46·1 miles per hour.

The maximum indicated horse-power developed was 803·6, with steam cut-off at 44 per cent. of the stroke, on an up gradient of 1 in 80 at the 152nd mile post, the speed being 31 miles per hour, and the number of revolutions 123 per minute. The mean boiler pressure throughout the journey was 171·7 lbs. per square inch.

The journey occupied 4 hours 4 minutes, the actual running time being 3 hours 43¾ minutes.

The coal burnt per hour journey time was 1198·2 lbs. exclusive of lighting up, and 1280·95 inclusive of lighting up, and taking running time, 1309·2 lbs. exclusive of lighting up, 1400·1 inclusive. This gives 72·18 and 77·16 lbs. respectively per square foot of grate area per hour running time, and 66·05 and 70·61 lbs. respectively, journey time. This is equivalent to 2·34 and 2·94 lbs., exclusive and inclusive of lighting up respectively, per indicated horse-power per hour running time, and 2·14 and 2·74 lbs., exclusive and inclusive of lighting up respectively, journey time.

The coal burnt per train mile, exclusive of lighting up, was 28·4 lbs., and inclusive of lighting up 30·36 lbs.; the coal burnt per engine mile, exclusive of lighting up, 27·8, and inclusive of lighting up, 29·7 lbs.

The water evaporated per hour journey time was 10,601 lbs., or, taking the running time, 11,559·1 lbs.; the water evaporated per square foot of total heating surface per hour, taking the journey time, was 7·8 lbs., and running time 8·5 lbs. The water evaporated per indicated horse-power per hour, taking running time, was 20·7 lbs.; water evaporated per lb. of coal, exclusive of lighting up, was 8·84 lbs. inclusive of lighting up 8·27 lbs.; from feed temperature, 8·84 lbs.; and the equivalent from and at 212° Fah., 10·4 lbs. The temperature of the feed water at the time of lighting up was 125° Fah. The vacuum in inches of water was as follows:—At base of chimney, maximum 14·0 ins., mean 6·54 ins.; level with the top and in centre of blast pipe, maximum 11·0 ins., mean 4·21 ins.; at middle of middle row of tubes, maximum 8·0 ins., mean

RESULTS OF THE FOURTH TRIAL.

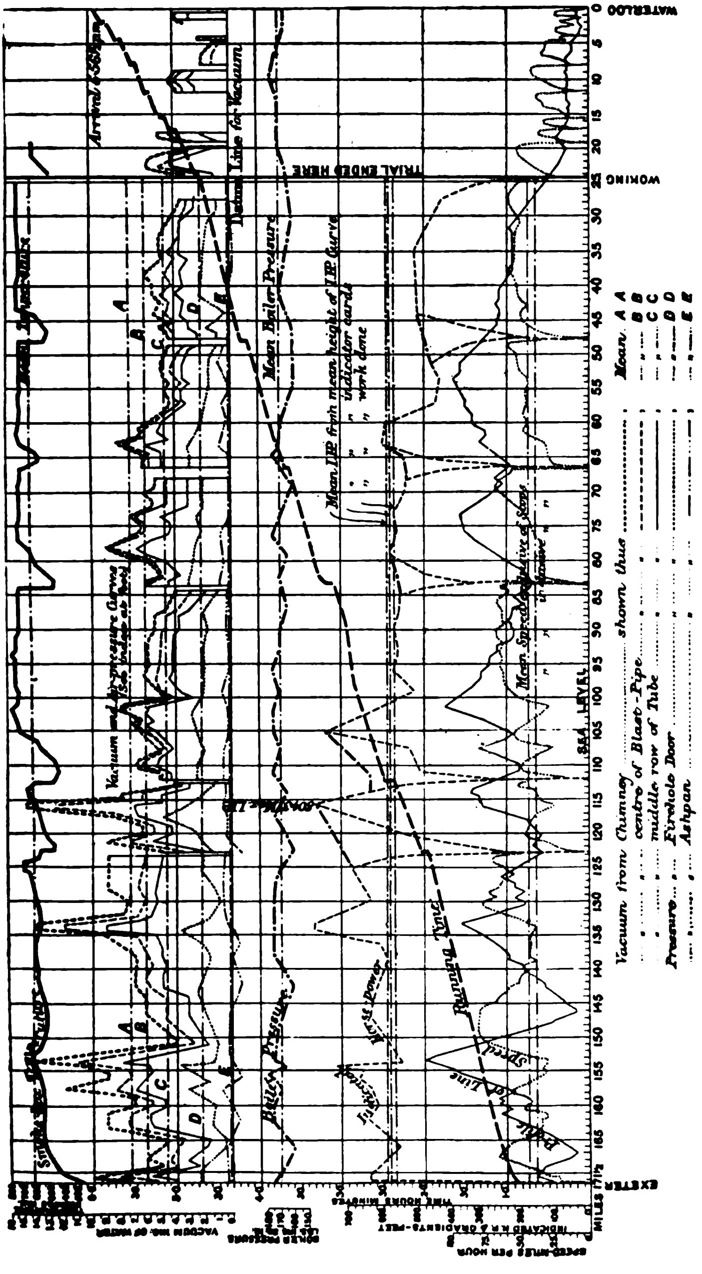

Vacuum from Chimney .... shown thus .... ; Mean A A
" " centre of Blast-Pipe .... " ------------------ ; " B B
" " middle row of Tube .... " ———————— ; " C C
Pressure ... " Firehole Door .... " .... ; " D D
" " Ashpan .... " —·—·—·— ; " E E

Fig. 216.—Record of Engine Performance.

3·83 ins. The maximum pressure in inches of water through the firehole door was 3·6 ins., and mean 1·63 ins., and in the ashpan, maximum 0·6 in., and mean 0·12 in. The temperatures of gases in the smokebox, taken at 1 mile intervals, were 740° Fah. maximum, and 604·62° Fah. mean. The coal stated includes that used while standing for 3¾ hours.

Trial from Exeter to Woking.—The fourth trial was the return journey from Exeter to Waterloo on the following day, 11th July, leaving there at 12.54 p.m. (nine minutes late), and making six intermediate stops. Owing to unforeseen stoppages and delays, which occurred after leaving Woking, it was impossible to record several of the most important items. The distance from Woking—only 24⅜ miles—occupying 1 hour 15½ minutes, the trial was therefore ended at Woking.

The load hauled, exclusive of engine and tender, and with no allowance for weight of passengers and luggage, was—Exeter to Yeovil, 197 tons 9 cwts. 2 qrs.; Yeovil to Templecombe, 244 tons 9 cwts. 2 qrs.; and from Templecombe to Waterloo, 195 tons 4 cwts. 2 qrs.; the mean load hauled throughout the journey being 198 tons 17 cwts. 3 qrs.

Fig. 216 shows the profile of the line, the steepest gradient being 1 in 80.

The maximum speed obtained was 81 miles per hour, while running on a down gradient of 1 in 80 between the 148th and 149th mile post from Waterloo.

The indicated horse-power taken just after at 80 miles per hour being 636·2 (see indicator diagram No. 139), fig. 217, with steam cut-off at 17 per cent. of the stroke, the number of revolutions per minute being 316. The mean speed, exclusive of stops, was 44·45 miles per hour. The maximum indicated horse-power was 804·3 (see indicator diagram No. 150), fig. 218, steam cut-off being 48 per cent. This was obtained on the level and just leaving an up gradient of 1 in 200 at the 115½ mile post, the speed being 27½ miles per hour, and the number of revolutions, 109 per minute. The mean boiler pressure throughout the journey was 169·4 lbs.

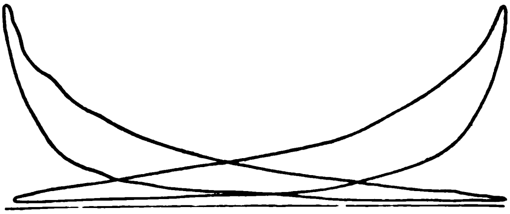

Mean effective pressure, 26·75 lbs. per square inch.

Fig. 217.—Indicator Diagram, No. 139.

Trial from London to Salisbury.—The fifth trial was run on 13th July, from Waterloo with the 2.40 p.m. train to Salisbury, a distance of 83$\frac{5}{8}$ miles, with three intermediate stops. The load hauled, excluding engine and tender, and with no allowance for weight of passengers and luggage, was 137 tons 10 cwts. 2 qrs. The steepest gradient was 1 in 141 up. The maximum speed obtained was 75 miles per hour, running on a down gradient of 1 in 178 at the 65th mile post. The indicated horse-power taken at the 64½ mile post, at 72½ miles per hour, being 601·9, with steam cut-off at 17 per cent. of the stroke, and number of revolutions 287 per minute. The mean speed, exclusive of stops, was 46·7 miles per hour. The maximum indicated horse-power was 626·1, with steam cut-off at 20 per cent. of the stroke. This was obtained on an up gradient of 1 in 264 at the 69th mile post, the speed being 50 miles per hour, and the number of revolutions 198 per minute. The mean boiler pressure throughout the journey was 170·8 lbs. per square inch. The journey occupied 2 hours 4 minutes, the actual running time being 1 hour 47¼ minutes.

The coal burnt per hour journey time was 1137·9 lbs. exclusive of lighting up, and 1219·2 lbs. inclusive of lighting up; and, taking running time, was 1315·8 lbs. exclusive of lighting up, and 1409·8 lbs. inclusive. This gives 72·49 and 77·67 lbs. respectively per square foot of grate area per hour running time, and 62·7 and 67·88 lbs. respectively journey time. This is equivalent to 2·45 and 2·76 lbs., exclusive and inclusive of lighting up respectively, per indicated horse-power per hour running time, and to 2·12 and 2·43 lbs., exclusive and inclusive of lighting up respectively, journey time. The coal burnt per train mile, exclusive of lighting up, was 28·16 lbs., and inclusive of lighting up was 31·18 lbs.; the coal burnt per engine mile. exclusive of lighting up, was 27·02 lbs., and inclusive of lighting up, 28·96.

The water evaporated per hour journey time was 10,627 lbs., or taking the running time, 12,288·6 lbs.; the water evaporated per square foot of total heating surface per hour, taking journey time, was 7·82 lbs., running time 9·04 lbs.; the water evaporated per indicated horse-power per hour, taking running time, was 22·9 lbs.; the water evaporated per lb. of coal, exclusive of lighting up, 9·34 lbs.; inclusive of lighting up, 8·71 lbs.; from feed temperature, 9·34 lbs.; and the equivalent from and at 212° Fah., 10·96 lbs. The temperature of the water in the boiler at the time of lighting up was 61° Fah.

The vacuum in inches of water was as follows:—At base of chimney, maximum 7·0 ins., mean 3·03 ins.; level with top and in centre of blast pipe, maximum 6·8 ins., mean 4·96 ins.; at middle of middle row of tubes, maximum 5·4 ins., mean 3·82 ins. The maximum pressure in inches of water through the firehole door was 2·2 ins., and mean 0·98 ins.; and in the ashpan, maximum 0·8 ins., and mean 0·16 ins.

The temperature of gases in the smokebox, taken at 1 mile intervals, was 740° Fah. maximum, and the mean 575° Fah.

The coal stated includes that used while standing for 3¼ hours. The weather was fine with head wind.

Means Employed in Observations.—The speed was taken by a Boyer speed indicator and recorder, driven from the bogie-wheel, and besides indicating on a dial the miles per hour, it recorded the same on metallic paper, the miles on the paper agreeing exactly with the mile posts on the line.

The Boyer speed indicator is an instrument for showing at a glance the speed in miles per hour, and at the same instant recording it on a ribbon of paper, which, by the action of the instrument, is wound off one spool on to another. It is of special value for speed trials and records of the running of locomotive, stationary, and other engines, and for indicating purposes, where the speed is an important factor. The instrument consists essentially of a rotary pump, cylinder and piston, all contained in a box 9 ins. by 7½ ins. by 9¾ ins. high. Oil is used as a circulating medium in the pump chambers, motion being transmitted to the pumps by a wire coil band from a pulley attached to the bogie-wheel of the engine.

In this way the fluid is pumped under the piston at a rate dependent on the speed, which is registered by a pencil carried by the piston-rod and controlled by a spring, the tension of which is the resisting force overcome by the pump; a wire carried from this piston-rod to a gauge shows at a glance the speed at which the engine is running.

The diagrams were taken with Crosby indicators, the springs used having a scale of 100 lbs. per inch of diagram. They were tested before using.

Temperatures up to 680° Fah. were taken with an ordinary mercurial thermometer; over 680° with a mercury thalpotassimeter, which only commences to register at the boiling point of that liquid. In construction it is similar to a Bourdon pressure gauge, the dial being graduated in degrees to correspond with the temperature and pressure of the mercury with which the tube is filled.

For the purpose of measuring the feed the tender was first filled and the contents passed through a Worthington water meter (previously corrected), and a gauge fitted to the tender was graduated in cubic feet as the water passed out.

The coal was weighed before each trial on to a clean tender, any remaining at the end of each journey being weighed and allowed for.

In calculating the engine efficiencies the amount of steam used by the ejectors in connection with the automatic vacuum brake, as also that used in the steam brake cylinder, has been neglected; consequently the actual engine efficiency would be in excess of that given.

TABLE XV.—Result of the Five Trials.

		1st Trip.	2nd Trip.	3rd Trip.	4th Trip.	5th Trip.
Class of engine,		4 wheels coupled	4 wheels coupled	4 wheels coupled	4 wheels coupled	4 wheels coupled
Diameter of driving wheels,	ins.	85	85	85	85	85
Weight on leading bogie axle,	tons, cwts. qrs.	9 10 2	9 10 2	9 10 2	9 10 2	9 10 2
,, trailing ,,	,, ,,	9 7 0	9 7 0	9 7 0	9 7 0	9 7 0
,, driving axle,	,, ,,	14 19 0	14 19 0	14 19 0	14 19 0	14 19 0
,, trailing ,,	,, ,,	14 16 0	14 16 0	14 16 0	14 16 0	14 16 0
Weight of tender full and 2 tons of coal,	,, ,,	33 8 0	33 8 0	33 8 0	33 8 0	33 8 0
Total weight of engine and tender in working order,	,, ,,	82 0 2	82 0 2	82 0 2	82 0 2	82 0 2
Wheel base,	ft. ins.	44 3⅛	44 3⅛	44 3⅛	44 3⅛	44 3⅛
Weight per foot of wheel base,	tons	1·853	1·853	1·853	1·853	1·853
Tractive force,	lbs.	12,146	12,146	12,146	12,146	12,146
Diameter of cylinders,	ins.	19	19	19	19	19
Stroke,	,,	26	26	26	26	26
Heating surface of firebox,	sq. ft.	112·45	112·45	112·45	112·45	112·45
,, ,, tubes,	,,	1246·2	1246·2	1246·2	1246 2	1246·2
Total heating surface,	,,	1358·65	1358·65	1358·64	1358·65	1358·65
Area through tubes,	,,	2·47	2·47	2 47	2·47	2·47
Grate area,	,,	18·14	18·14	18·14	18 14	18·14
Area through fire-bars,	,,	5·8	5·8	5·8	5·8	5·8
Total heating surface to grate area (Ratio of),	,,	74·9	74·9	74·9	74·9	74·9
Boiler pressure,	lbs. per sq. in.	175	175	175	175	175
Area of cylinder, front end,	sq. ins.	278 6	278·6	278·6	278·6	278·6
,, ,, back end,	,,	273·2	273·2	273·2	273·2	273·2
Mean effective area,	,,	275·9	275·9	275·9	275·9	275·9
Piston constant,		·0363	·0363	·0363	·0363	·0363
Coal used,		Welsh	Welsh	Welsh	Welsh	Welsh
Capacity of tender,	galls.	2908	2908	2908	2908	2908
Steam space in boiler,	cub. ft.	67·78	67·78	67·78	67·78	67·78

TABLE XV.—*Continued.*

	1st Trip.	2nd Trip.	3rd Trip.	4th Trip.	5th Trip.
Water space in boiler, ... cub. ft.	143·36	143·36	143·36	143·36	143·36
Steam space to water space (Ratio of), ... ,,	2·11	2·11	2.11	2·11	2·11
Form of blast pipe, ...	Patent vortex	Patent vortex	Patent vortex	Patent vortex	Patent vortex
Diameter of gases pipe, ... ins.	5	5	5	5	5
Area ,, ,, ... sq. ins.	19·6	19·6	19·6	19·6	19 6
Area of annular exhaust, ... ,,	13·9	13·9	13·9	13·9	13 9
Position of blastpipe relative to top of top row of tubes, . .	...	...	...	...	...
Mean boiler pressure throughout journey, . . . lbs. per sq. in.	167 5	167·2	171·7	169·4	170·8
Total coal used exclusive of lighting up, ... lbs.	3395	3120	4872	4856	2352
,, inclusive ,, ... ,,	3563	3288	5208	5248	2520
Coal burnt per hour running time, ... ,,	1136·4	1270·8	1309·2	1467	1315·8
,, ,, journey time, ... ,,	974·7	1162·8	1198 2	1283	1137·9
Coal burnt per square foot of grate area per hour of running time, ... lbs.	62·54	70·0	72·18	80·89	72·49
Coal burnt per square foot of grate area per hour of journey time, ... lbs.	53·7	64·1	66·05	70·76	62·7
Coal burnt per I.H.P. per hour running time, ... ,,	2·31	2·61	2·34	2·52	2·45
,, ,, ,, journey time, ... ,,	1·98	2·39	2·14	2·20	2·12
Coal burnt per train mile, ... ,,	30·5	28·1	28·4	32·98	28·16
,, engine mile, ... ,,	29·5	27·13	27·8	32·21	27 02
Calorific value of 1 lb. of coal in B.T.U., ...	13,903	13,903	13,583	12,840	13,477
Total water evaporated, ... lbs.	32,887	27,406	43,104	38,415	21,966
Water evaporated per hour running time, ... ,,	11,000	11,167	11,559·1	11,600	12,288·6
,, ,, hour journey time, ... ,,	9442·1	10,214	10,601	10,150	10,627
,, ,, square foot of total heating surface per hour of running time, ... lbs.	8 09	8 22	8·5	8·54	9·04
,, ,, square foot of total heating surface per hour of journey time, ...	6·95	7·51	7·8	7·47	7·82

TABLE XVI.—BALANCE

Total heat of steam at 167·5° Fah. . . . . . = 1,228 B.T.U.
Deduct feed temperature, ... 61°

Thermal units taken up per lb. of steam, . . . 1,167

Lbs. of water evaporated per lb. of coal . . . = 9·232

Therefore 1,167 × 9·232 = 10,774 B.T.U. expended per lb. of coal in evaporating the water.

Assuming that the specific heat of air . . . . . = 0·237
and that the quantity of air required per lb. of coal = 24 lbs.

Let T = mean temperature of smokebox gases . . = 488·91° Fah.
and t = mean temperature of air . . . . . . = 68° Fah.

Then the heat carried away by smokebox gases

$$= 24\ (T - t)\ 0·237$$
$$= 24\ (488·91 - 68)\ 0·237 = 2,394 \text{ B.T.U.}$$

Heat units per lb. of coal . . . . = 13,903
Loss in smokebox . . . . . . = 2,394 B.T.U. per lb. of coal.

Available heat, ... 11,509

Then $\frac{11,509}{1,167}$ = 9·86 lbs. of water that should have been evaporated, as against 9·23 lbs. evaporated.

Therefore the heat lost by radiation and imperfect combustion, &c. = 735 B.T.U. per lb. of coal.

Heat evolved per lb. of Coal.	B.T.U.	Heat expended per lb. of Coal.	B.T.U.
Calorific value of 1 lb. of coal used, . . .	13,903	Heat expended in evaporating the water, . .	10,774
		Heat carried away by the products of combustion, lost by radiation and imperfect combustion, &c.,	3,129
	13,903		13,903

TABLE XIX.—BALANCE

Total heat of steam at 169·4° Fah. . . . . . = 1,228·2 B.T.U.
Deduct feed-temperature, ... 61·0°

Thermal units taken up per lb. of steam, . . . 1,167·2

Lbs. of water evaporated lb. of coal, ... = 7·32

Therefore 1,167·2 × 7·32 = 8544 B.T.U. expended per lb. of coal in evaporating the water.

Assuming that the specific heat of air . . . . = 0·237
and that the quantity of air required per lb. of coal = 24 lbs.

Let T = mean temperature of smokebox gases . . = 627·0° F.
and t = mean temperature of air, ... = 68° F.

Then the heat carried away by smokebox gases

$$= 24\,(T - t)\;0\cdot237$$
$$= 24\;(627\cdot0 - 68)\;0\cdot237 = 3{,}179 \text{ B.T.U.}$$

Heat units per lb. of coal . . . = 12,840
Loss in smokebox . . . . . . = 3,179 B.T.U. per lb. of coal.

Available heat, ... 9,661

Then $\frac{9{,}661}{1{,}167\cdot2} = 8\cdot27$ lbs. of water that should have been evaporated as against 7·32 lbs. evaporated.

Therefore the heat lost by radiation, imperfect combustion, &c., = 1,117 B.T.U. per lb. of coal.

Heat evolved per lb. of Coal.	B.T.U.	Heat expended per lb. of Coal.	B.T.U.
Calorific value of 1 lb. of coal used, . . .	12,840	Heat expended in evaporating the water, . .	8,544
		Heat carried away by the products of combustion, lost by radiation and imperfect combustion, &c ,	4,296
	12,840		12,840

Sheet, Trial No. 4.

Heat expended in evaporating the water . . . . = 8,544 B.T.U.

Mean indicated horse-power . . . . = 582

Water evaporated per I.H.P. per hour (running time) = 19·94 lbs.

" " " per minute " = 0·3,323 "

Water actually evaporated per lb. of coal, inclusive of lighting up . . . . = 7·32 "

Then the heat taken up by the feed-water per minute

$$= \frac{8{,}544 \times 0·3{,}323 \times 582·0}{7·32} = 225{,}734 \text{ B.T.U.}$$

Joule's equivalent . . . . = 772

The units of heat per H.P. $= \frac{33·000}{772} = 42·75$.

Then the heat turned into work per minute

$$= \text{the mean I.H.P.} \times 42·75$$

$$= 582·0 \times 42·75 = 24{,}880 \text{ B.T.U.}$$

Efficiency of the engine

$$= 100 \times \frac{24.880}{225{,}734} = 11·02 \text{ per cent.,}$$

" " boiler $= 100 \times \frac{8{,}544}{12{,}840} = 66·54$ per cent.,

" " engine and boiler combined

$$= \frac{66·54 \times 11·02}{100} = 7·34 \text{ per cent.}$$

Heat evolved per lb. of Coal.	Per Cent.	**Heat expended per lb. of Coal.**	Per Cent.
Calorific value of 1 lb. of coal used, . . .	100·00	Heat expended in evaporating the water, . .	66·54
		Heat carried away by the products of combustion, lost by radiation and imperfect combustion, &c.,	33·46
	100·00		100·00

TABLE XX.—BALANCE

Total heat of steam at 170·8° Fah. . . . . . = 1228·4 B.T.U.
Deduct feed temperature, ... 61·0°

Thermal units taken per lb. of steam, ... 1167·4

Lbs. of water evaporated per lb. of coal . . . . = 8·71

Therefore 1,167·4 × 8·71 = 10,173 B.T.U. expended per lb. of coal in evaporating the water.

Assuming that the specific heat of air . . . . . = 0·237
and that the quantity of air required per lb. of coal = 24 lbs.

Let T = mean temperature of smokebox gases . . = 575·1° Fah.
and t = mean temperature of air . . . . . = 68° Fah.

Then the heat carried away by smokebox gases

$$= 24\,(T - t)\;0{\cdot}237$$
$$= 24\,(575{\cdot}1 - 68)\;0{\cdot}237 = 2{,}884 \text{ B.T.U.}$$

Heat units per lb. of coal . . . . . = 13,477
Loss in smokebox . . . . = 2,884

Available heat, ... 10,593

Then $\frac{10{,}593}{1{,}167{\cdot}4} = 9{\cdot}07$ lbs. of water that should have been evaporated, as against 8·71 lbs. evaporated.

Therefore the heat lost by radiation, imperfect combustion, &c. = 420 B.T.U. per lb. of coal.

Heat evolved per lb. of Coal.	B.T.U.	Heat expended per lb. of Coal.	B.T.U.
Calorific value of 1 lb. of coal used, . . .	13,477	Heat expended in evaporating the water, . .	10,173
		Heat carried away by the products of combustion, lost by radiation and imperfect combustion, &c.,	3,304
	13,477		13,477

SHEET, TRIAL No. 5.

Heat expended in evaporating the water . . . . = 10,173 B.T.U.

Mean indicated horse-power . . . . . . = 536·7

Water evaporated per I.H.P. per hour (running time) = 22·9 lbs.

" " " per minute " . = 0·381 "

Water actually evaporated per lb. of coal, inclusive of lighting up . . . . = 8·71 "

Then the heat taken up by the feed-water per minute

$$= \frac{10{,}173 \times 0{\cdot}381 \times 536{\cdot}7}{8{\cdot}71} = 238{\cdot}817 \text{ B.T.U.}$$

Joule's equivalent . . . . = 772

$$\text{The units of heat per H.P.} = \frac{33{\cdot}000}{722} = 42{\cdot}75$$

Then the heat turned into work per minute

$$= \text{the mean I.H.P.} \times 42{\cdot}75$$

$$= 536{\cdot}7 \times 42{\cdot}75 = 22{,}950 \text{ B.T.U.}$$

Efficiency of the engine

$$= 100 \times \frac{22{,}950}{238{,}817} = 9{\cdot}61 \text{ per cent.,}$$

$$\text{" " boiler} = 100 \times \frac{10{,}173}{13{,}477} = 75{\cdot}5 \text{ per cent.,}$$

" " engine and boiler combined

$$= \frac{75{\cdot}5 \times 9{\cdot}61}{100} = 7{\cdot}25 \text{ per cent.}$$

Heat evolved per lb. of Coal.	Per Cent.	Heat expended per lb. of Coal.	Per Cent.
Calorific value of 1 lb. of coal used, . . .	100·00	Heat expended in evaporating the water, . .	75·5
		Heat carried away by the products of combustion, lost by radiation and imperfect combustion, &c.,	24·5
	100·00		100·00

CHAPTER XX.

AMERICAN LOCOMOTIVES.

CONTENTS.—Practice in Relation to Working Conditions—Types of American Locomotives—Compound Locomotives in America—Cylinders and Steam-chests—Pistons and Piston-rods—Metallic Packing—Crossheads and Slide Bars—Valve Gear—Slide Valves—Frames, Hornblocks, and Horn-stays—Axle-boxes—Bearing Springs—Wheels—Boilers—Smokebox; chimneys—Tenders—Height of Centre of Gravity.

IN this chapter it is intended to point out, in as succinct a manner as possible, the leading distinctions between American and British practice in locomotive construction. Certain of the details of American locomotives and American practice have already been described in the course of the preceding chapters. It is not proposed to repeat these. The chapter will contain a brief description of the leading typical forms of locomotives in general use in America—avoiding departures from the normal and mere novelties—followed by a survey of the broad differences in regard to details.

PRACTICE IN RELATION TO WORKING CONDITIONS.

Before entering upon a comparison between British and American locomotives, it may be profitable to consider for a moment why divergencies occur. They are not, in general, merely accidental or fanciful—to be accounted for as matters of taste or by a supposed national prejudice or caprice. In the main, they are the outcome of the effort to adapt the locomotive to the conditions under which it does its work—they exemplify the law of the survival of the fittest. Probably a very small residuum, if any, is to be accounted for merely as the result of the individual preferences of the designers. On the other hand, it would not be easy—scarcely possible indeed—to establish the precise value or to point out exactly the controlling conditions of every difference in foreign practice or design from that obtaining here.

To consider the various forms and details of foreign locomotives in the light of the conditions to which they have been caused to conform is, nevertheless, the most advantageous mode of proceeding. To attain a clear comprehension of the relation of the various designs to the working and other conditions is an essential step in turning to account the experience of others. To those, indeed, upon whom the task falls of adapting the locomotive to new conditions abroad—or even to changing circumstances at home—the description of fuel available—in early days wood, and the same even at the present time in some regions—have been influential in instituting the ample grate areas and large heating surfaces; also, with the forcing of the boiler, the extended firebox and large spark arresters. The nature of the traffic and the distances to be traversed —which induce the formation of "freight" trains of from three to four times the weight of goods trains in this country—has probably been in part, at least, the cause of the large growth in size, weight, and power of American locomotives, and of the wide employment of multiple coupling of the axles. The larger "load gauge" in America has also been of some moment in this connection. The climate will account for the commodious cab, and will probably, since steam heating of the cars has been adopted, assist in keeping up the demand for increase of boiler power. These instances will be enough at this stage to exemplify the relation between surrounding conditions and design. Others will be pointed out in the sequel.

TYPES OF AMERICAN LOCOMOTIVES.

1. **"American" Type or Eight-wheel Engine.**—The normal or representative type of passenger engines on the American Continent has four coupled wheels and a leading four-wheel bogie, in these respects resembling the more recent British express locomotives. It is commonly known either as the "American" type or the "eight-wheel" engine. Engines of this kind far outnumber those of all other forms together. Fig. 219 gives a fair idea of the general appearance of engines of this type; and in Plate IX. is shown the general arrangement and design of the principal parts of a slightly different example of the same class.

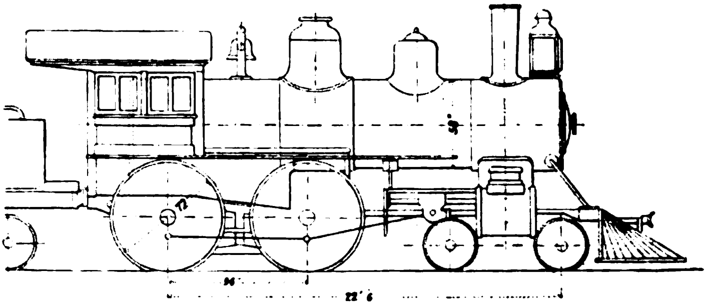

Fig. 219.—"American" Type or Eight-wheel Engine.

In order to convey some notion of the dimensions of these engines the principal particulars of a few selected examples are here given. Attention is not confined merely to the largest and most powerful. All the engines mentioned are built for the 4 ft. 8½ ins. or 4 ft. 9 ins. gauge, which in America, as in this country, is the standard gauge.

INDEX TO PLATE IX.

American Express Passenger Engine.

1. Boiler.
2. Firebox.
3. Crown staying.
4. Dome.
5. Throttle.
6. Throttle stuffing-box.
7. Throttle lever.
8. Dry pipe.
9. Tubes.
10. Smokebox.
11. Steam pipe in smokebox.
12. Smokebox front.
13. Smokebox door.
14. Number plate.
15. Smoke stack.
16. Fire door.
17. Boiler jacket.
18. Safety valve.
19. Safety-valve relief lever.
20. Spark ejector.
21. Firebrick.
22. Cylinder.
23. Cylinder head, front.
24. Cylinder head, back.
25. Cylinder-head cover, front.
26. Cylinder-head cover, back.
27. Steam-chest.
28. Steam-chest cap.
29. Steam-chest cover.
30. Steam-chest valve.
31. Steam-chest valve yoke.
32. Steam-chest oil pipe.
33. Steam-chest relief valve.
34. Cylinder cocks.
35. Cylinder-cock rigging.
36. Cylinder-cock lever in cab.
37. Engine frame and pedestals.
38. Engine frame front rail.
39. Middle brace of frame.
40. Back brace of frame.
41. Pedestals, wedge and gib.
42. Driving-box.
43. Driving-axle.
44. Eccentric.
45. Wheel centre.
46. Counterbalance.
47. Crank-pin.
48. Tire.
49. Guide bearer.
50. Guide (top bar).
51. Guide (bottom bar).
52. Crosshead.
53. Crosshead oil cup.
54. Guide oil cup.
55. Eccentric-rod (forward motion)
56. Eccentric-rod (backward motion).
57. Reverse link.
58. Sliding block.
59. Lifting link.
60. Reverse shaft.
61. Counterbalance spring.
62. Reverse lever-rod.
63. Reverse lever.
64. Rockshaft.
65. Valve-rod.
66. Main rod.
67. Parallel or side rod.
68. Piston-head.
69. Piston-rod.
70. Driving spring.
71. Driving spring links.
72. Equalising beam.
73. Equalising beam fulcrum.
74. Pilot.
75. Front draw-bar.
76. Front bumper.
77. Pilot brace.
78. Engine truck frame.
79. Engine truck wheels.
80. Engine truck axle.
81. Engine truck box.
82. Engine truck spring.
83. Engine truck equalising beam.
84. Sand-box.
85. Sand pipe.
86. Bell.
87. Bell stand.
88. Bell yoke.
89. Running board.
90. Driving-wheel cover.
91. Engine truck wheel cover.
92. Cab bracket.
93. Back bumper.
94. Engine step.
95. Engine step hanger.
96. Footplate.
97. Tender wedge.
98. Tender wedge box.
99. Grate bars.
100. Drop plate.
101. Rocking grate lever.
102. Rocking grate rod.
103. Drop plate crank.
104. Drop plate rod.
105. Exhaust nozzle.
106. Netting in smokebox.
107. Cleaning hole and cap.
108. Whistle.
109. Whistle lever.
110. Headlight.
111. Headlight shelf.
112. Headlight step.
113. Headlight step on smokebox.
114. Smokebox brace.
115. Steam-gauge stand.
116. Steam gauge.
117. Cab lamp.
118. Air gauge.
119. Injector.
120. Injector steam valve.
121. Injector check.
122. Injector check pipe.
123. Injector steam pipe.
124. Hose and feed-pipe coupling.
125. Gauge cocks.
126. Cab.
127. Cab handle.
128. Handrail.
129. Handrail columns.
130. Air-brake pump.
131. Engineer's valve.
132. Air drum.

wheels. These are occasionally employed as passenger engines, but are generally recognised as "freight" or goods engines. An engine of this type is shown in fig. 220. As an example of weights and dimensions of such an engine we may take a Mogul engine constructed by the Baldwin Company. This has cylinders with a diameter of 19 ins. and stroke of 24 ins. The driving-wheels are 4 ft. 8 ins. in diameter. The rigid wheel-base is 15 ft. 5 ins., and the total 23 ft. 6 ins. The inside diameter of the boiler where least is 4 ft. 11 ins., and the length of the barrel 11 ft. 6 ins. The length of the firebox is 6 ft. 2 ins. The total heating surface is 1607·5 sq. ft., and the working pressure 160 lbs. per square inch. The adhesive weight is 40¾ tons, and the total weight is over 48½ tons.

3. **Ten-wheel Engine.**—Another and very important type of locomotive, analogous as regards its employment to the "mixed traffic" engines in this country, is known as the "ten-wheel" engine. This has six coupled wheels and a leading four-wheel bogie, as shown in fig. 221. Nearly all Western railroads use ten-wheel engines for their express trains. The same engines are also used for express live-stock trains which are run at passenger train speed.

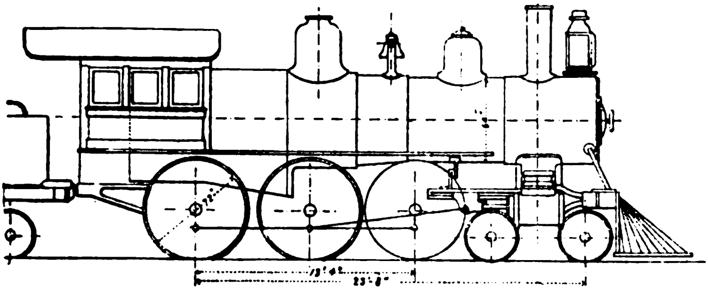

Fig. 221.—Ten-wheel Engine.

These engines are commonly of greater power than either of the preceding classes. But before giving particulars of one of the larger examples, it may be of interest to notice the dimensions of an engine of this kind, built by the Brooks Company, that made a remarkable record in the autumn of 1894. The cylinders of this engine have a diameter of 17 ins. and a stroke of 24 ins., and the driving-wheels are 5 ft. 8 ins. in diameter. In a well-attested trial, this engine accomplished 510 miles on the Lake Shore and Michigan Railroad in just under 7 hrs. 51 mins. nett, and in 8 hrs. 1 min. including stops. The average speed between stations was 63·61 miles per hour.

The boiler diameter is 4 ft. 4 ins.; the length of barrel is 13 ft. 10 ins., and of the firebox 7 ft. 11 ins. The grate area is 28 sq. ft.; the total heating surface 1603 sq. ft., and the working pressure

180 lbs. per square inch. The weight on the truck is 11 tons, on the drivers 39½ tons; total, 50½ tons.

A larger engine of this type—more representative, in point of dimensions, of the more powerful class of express engines—is one built by the Cooke Locomotive Company. The cylinders are 21 ins. in diameter and have a stroke of 26 ins. The six coupled wheels have a diameter of 5 ft. 2 ins. The grate area is 28 sq. ft., and the total heating surface 1970·8 sq. ft. The total weight is 61 tons, of which 45½ tons is adhesive weight, and 15½ tons is borne by the bogie.

Another example, somewhat larger, is a ten-wheel engine of the Southern Pacific Railroad, with cylinders 21 ins. in diameter and of 28 ins. stroke, and driving-wheels 6 ft. in diameter. The boiler has a diameter of 5 ft. 2 ins. where smallest, and the total heating surface is 2405·9 sq. ft. The working pressure is 200 lbs. per square inch. The total weight of this engine is 68 tons.

4. **Consolidation Type.**—The "Consolidation" engine has eight coupled wheels and a leading pair of truck wheels. These engines are intended for heavy freight trains on roads having steep gradients. They are practically the analogue of the goods engine in this country.

The example given in fig. 222 is one constructed at the Rogers Locomotive Works. The coupled wheels are 4 ft. 8½ ins. in diameter, three pairs being placed as close together as possible, the distance between the centres being only 5 ft. One pair of wheels is flangeless. The driving wheel-base is 16 ft. 9 ins. The cylinders are of 21 ins. diameter and 24 ins. stroke.

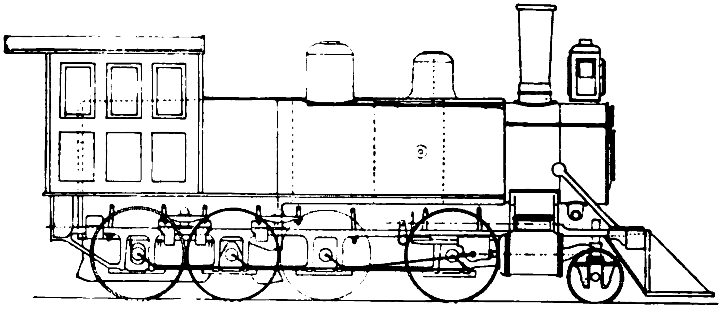

Fig. 222.—Consolidation Engine.

The firebox—of the Belpaire type—is 12 ft. in length over all, and the tubes are 11 ft. 10½ in. in length. The total heating surface is 1622·5 sq. ft., and the working pressure 165 lbs. per square inch. The weight on the drivers is 53 tons, and the total weight 61 tons.

5. **"Decapod" and "Mastodon" Types.**—Another type has a leading two-wheel truck and five coupled axles. This is known

as the "Decapod." An example is illustrated in fig. 223. In this, the cab is in front of the firebox and a separate shelter is provided at the rear for the fireman. The firebox is of the "Wootten" type, which will be again referred to below.

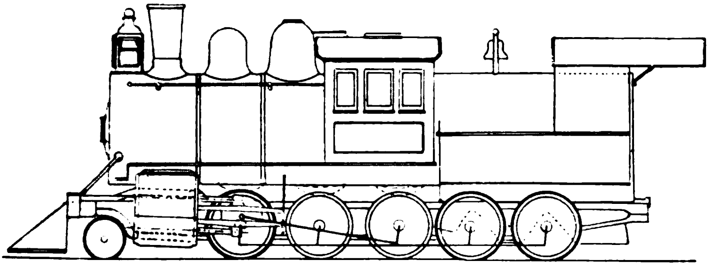

Fig. 223.—"Decapod" Engine.

Of the five pairs of coupled wheels, the second and third are without flanges. They are all of 4 ft. 2 ins. diameter. The engine is a four-cylinder compound of the Vauclain type, in which a high- and low-pressure cylinder—one vertically above the other—on each side of the engine work on the same crosshead. The diameter of the high-pressure cylinder is 16 ins., and of the low-pressure 27 ins.; the stroke of each being 28 ins. The boiler is 6 ft. 2½ ins. in diameter inside the smallest ring, and the length of the tubes is 12 ft. The width of the firebox inside is over 8 ft. 2 ins. and its length nearly 11 ft., giving the enormous grate area of 89·5 sq. ft. The total heating surface is 2443 sq. ft.

It may be interesting at this point to glance at some particulars of the most recently constructed "Mastodon," said to be the largest locomotive hitherto anywhere constructed. This huge engine, which has been built specially for drawing freight trains of extreme weight in the mountainous Montana district, is supported on four coupled axles and a leading four-wheel bogie. It is a two-cylinder simple engine with cylinders of 21 ins. diameter, having a stroke of 34 ins. The eight coupled drivers are each 4 ft. 7 ins. in diameter. These elements make the tractive coefficient 262, and this, with the boiler pressure of 210 lbs. per square inch, gives nearly 55,000 lbs. as the maximum tractive effort the engine is capable of exerting. The slide valves are of the piston type and are 1 ft. 2½ ins. in diameter.

The dimensions of the boiler are proportionate to the large capacity of the cylinders. In diameter it ranges in different parts from 6 ft. 6 ins. to 7 ft. 3 ins., while the tube length is upwards of 13 ft. 10 ins. The length of the firebox, which is of the Belpaire type, is 10 ft. 4 ins. The boiler centre is 9 ft. 5 ins. above the rails. The grate area is 34 sq. ft., and the aggregate heating surface is 3280 sq. ft.

The total weight of the engine without tender is 96 tons, of which 18 tons are carried by the bogie, and 78 tons on the four pairs of driving-wheels.

6. **Columbia and Atlantic Types.**—The types enumerated above are the most usual. In the case of one railway, however—the Philadelphia and Reading—single drivers have been recently introduced; and in other cases the foregoing types are modified by the addition of a trailing pair of wheels, together with, in eight-wheel engines, the substitution of a two-wheel for a four-wheel leading truck. Examples of these modifications are the "Columbia" type, fig. 224, and the "Atlantic" type, fig. 225.

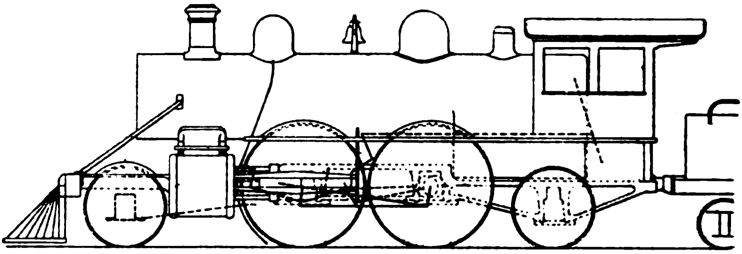

Fig. 224.—Columbia Type.

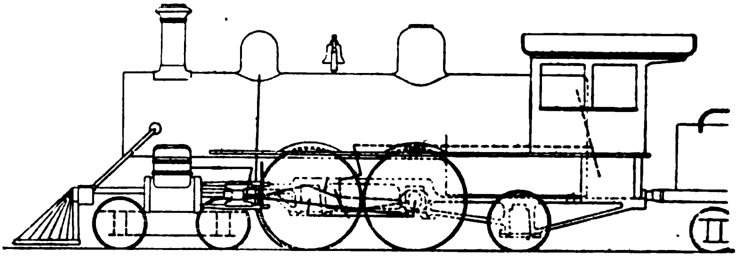

Fig. 225.—Atlantic Type.

A celebrated engine of the latter kind is a four-cylinder compound on the Vauclain system, with high-pressure cylinders of 13 ins. diameter, low-pressure cylinders of 22 ins. diameter, stroke of 26 ins., and with driving-wheels of 7 ft. 0¼ in. diameter. This engine, in the summer of 1897, ran daily during July and August from Camden to Atlantic City, a distance of 55½ miles, in an average time of 48 mins. The average speed was, therefore, 69 miles per hour between stations. The load was sometimes 243 tons, including engine and tender, but more often was about 270 tons. In 1896, on the same journey, the average speed during three months was 59 miles per hour with a load of 400 tons. This example is especially interesting as exemplifying the capabilities of the compound engine in respect to high speed.

a profitable task, to set out and critically examine the evidence on which this advocacy grounds its claims. It will be sufficient here to remark that—whether on account of dislike of the seemingly increased complexity, or supposed greater liability to mishap, or to an opinion that no permanently and distinctly marked superiority in general efficiency, taking all working conditions into account, has as yet shown itself in the compound locomotive—those who urge the extension of the system have not as yet succeeded in bringing about its general adoption. The compound locomotive appears, in America as in this country, to be on trial; the attitude of railroad management towards it is still that of waiting. Signs are not wanting, however, that it is beginning to make substantial headway, at least in regard to certain classes of traffic.

CYLINDERS AND STEAM-CHESTS.

The cylinders are almost universally placed outside the frames, with the steam-chest on top. American engineers consistently aim at placing all working parts in full view, and disposing them so as to be easily accessible. Outside-cylinders further this end more fully than any other arrangement possibly could. The general considerations bearing on the relative merits of the inside and outside position of the cylinders in locomotives have been enumerated in Chapter II., and need not be further discussed in this place.

The thickness of metal, the steam passages, and clearances are about the same in America as here; but the ports are there made rather longer. The differences are almost wholly in, and consequential to, the different disposition of the cylinders and valve-chests.

The cylinders are sometimes cast separately and secured to a distance piece between the frames, forming a saddle on which the smokebox rests. But the plan most generally followed is to employ two castings only, each casting forming one cylinder and half the saddle. The two castings are bolted together at the centre of the engine. The result is a much more rigid connection than where there are three castings, and at the same time several steam-tight joints are avoided.

Fig. 226 shows, in front elevation and in plan, an example of this method of constructing cylinders. A is the cylinder, with port face, B, cast in one with the half-saddle, C. In the latter are formed the steam branch, D, and exhaust branch, E. F is the recess into which the frame bar enters, and by which the saddle and cylinder are secured to the frame.

A feature worth mentioning is the generally smaller number of bolts used to make the joints than is usual here.

This necessitates the making of the joints of the cover either by grinding, or with red lead, boiled oil, or black japan. The joints are not scraped as a rule. The steam pipes are usually jointed by means of spherical seatings or "ball and socket joints," and are held by two bolts only.

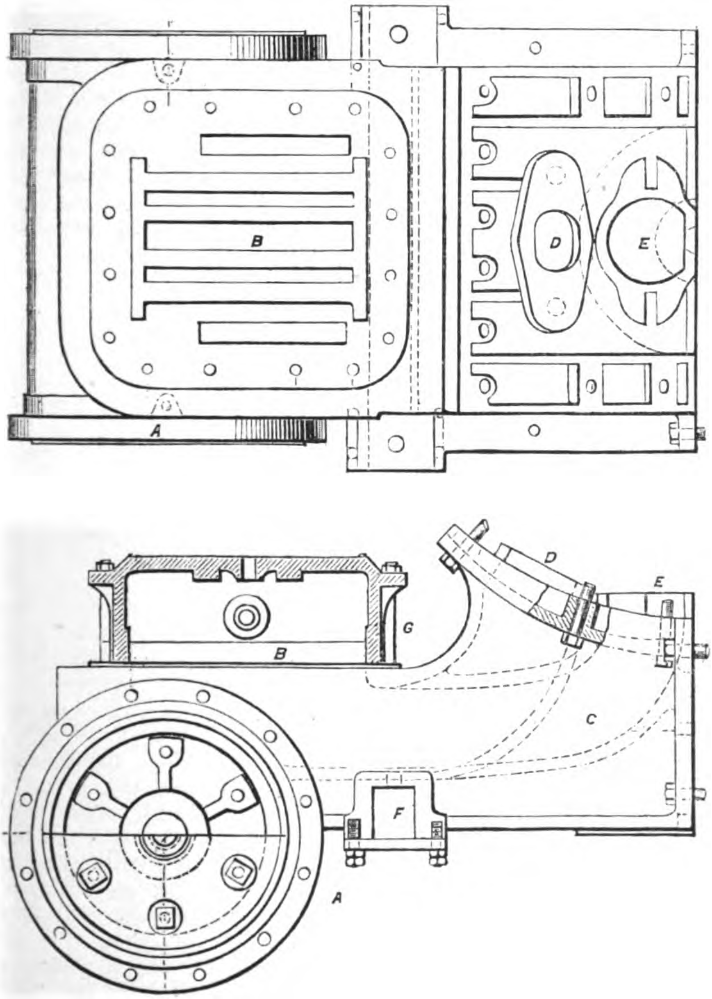

Fig. 226.—Cylinder and Saddle.

The steam chest—in the example shown—is in the form of a separate box, G, secured by long studs over the cylinder port face. In some cases, the cover is cast separately, but is still held by long studs in the same manner. The joint between the cover and the box, if any, and between the box and the cylinder are made with copper wire.

In fig. 227 is shown, in perspective, the cylinder and saddle casting for a Baldwin compound locomotive of the Vauclain type. The centre line of the low-pressure cylinder, L, is vertically over that of the high-pressure cylinder, H, both working on the same crosshead. The valve chest is at V. The recesses at A and B are for the reception of the upper and lower members of the front portion of the bar frame. This is the arrangement adopted in Mogul, Consolidation, and Decapod locomotives. When this portion of the frame is composed of a single member, as in American type and ten-wheel engines, the high-pressure cylinder is placed uppermost, and the valve chest also is differently disposed. The half saddle, C, abuts against the similar half cast with the cylinders on the opposite side of the engine, and the two are securely bolted together.

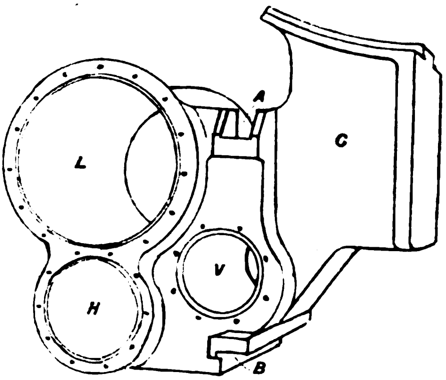

Fig. 227.—Cylinders and Saddle for Vauclain Compound Locomotive.

PISTONS AND PISTON-RODS.

The solid Ramsbottom piston, with cast-iron rings sprung into place, is much used. It is, however, commonly made to conform in outline to the older type of piston which it displaced. That is to say, the piston is made with a flat front and back and is cored out to lighten the casting. This form arose from the desire to avoid the expense of new cylinder covers when the new pistons were fitted to old engines. The piston-rods are of scrap iron, cold rolled shafting, or steel. When of rolled iron they are generally not turned. They are secured to the piston-head either by a cotter or by a nut. The rod is made large enough to allow of its being turned up when worn.

METALLIC PACKING.

Fig. 228 shows a form of metallic packing for piston-rods, which is also used in a slightly modified form for valve spindles. Three soft or anti-friction metal rings, 4, 5, 5, cut so as to closely embrace the rod, fit into a conical cup, 3. This has a flat bearing against piston-rods and the coupling-rods in engines of the Mogul, Consolidation, and other multi-coupled types has led to the adoption of two-bar forms. The four-bar crosshead differs considerably from its analogue in British practice. The whole of it is usually formed in a single steel casting, including the gudgeon or pin on which the connecting-rod works.

This type of crosshead has been adapted to the Vauclain compound engine, in which a high and low-pressure cylinder on each side of the engine work on the same crosshead. The crosshead as modified for this class of engine is shown in perspective in fig. 230.

Fig. 231 shows a two-bar form of crosshead and guide in which the slide-bars are placed wide apart in order to permit of the transverse motion of the connecting-rod. This has the disadvantage of considerable exposure of the working surfaces, but it has been found open to objection chiefly in not affording the necessary clearance to permit of its being employed in bogie engines. The rear bogie wheels, in certain cases, can not be easily arranged to clear the lower bar.

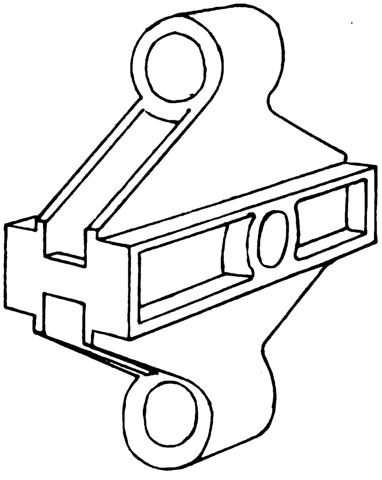

Fig. 230.—Crosshead for Vauclain Compound Locomotive.

Another form of two-bar crosshead and guide very widely employed is given in fig. 232. In this the side cheeks are bolted to a slipper-block which works between a pair of slide-bars above, but in the same plane as, the piston-rod. This construction of crosshead and arrangement of the slide-bars affords the desired clearance for the bogie wheels, and has the advantage of not exposing the working surfaces nearly so much as the preceding form. A single-bar crosshead, similar to that in use in this country, is also much employed.

VALVE GEAR.

The valve gear almost universally employed is Stephenson's link motion; but, instead of operating the valve spindle directly, it acts through a rocker arm. This is necessitated by the position of the valve chests outside the frames, and of the eccentrics, rods, and expansion link inside the frame. An example of a rocker arm in side and end elevation and in plan is shown in fig. 233. In this, A is the expansion link suspended from an arm on the reversing shaft, B.

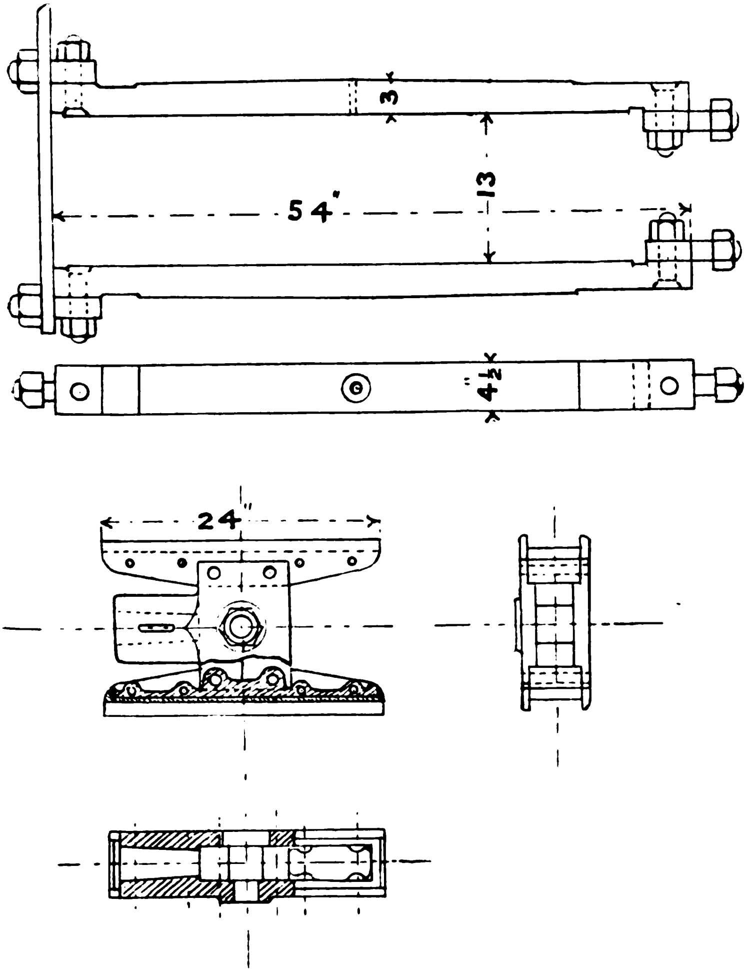

Fig. 231.—Two-bar Crosshead and Guides.

One arm, C, of the rocker, which is mounted on a bearing supported on the frame bar, D, is connected to the block in the link; and the other arm, E, is connected through the rod, F, to the valve.

Eccentric sheaves and straps are usually of cast iron, and in shape like those used in this country. Sometimes solid sheaves cast on the driving-axle and turned up in that position are employed.

Expansion links were at one time generally built up with distance pieces secured at each end, between the curved members, by bolts; but at the present time they are commonly solid, as in this

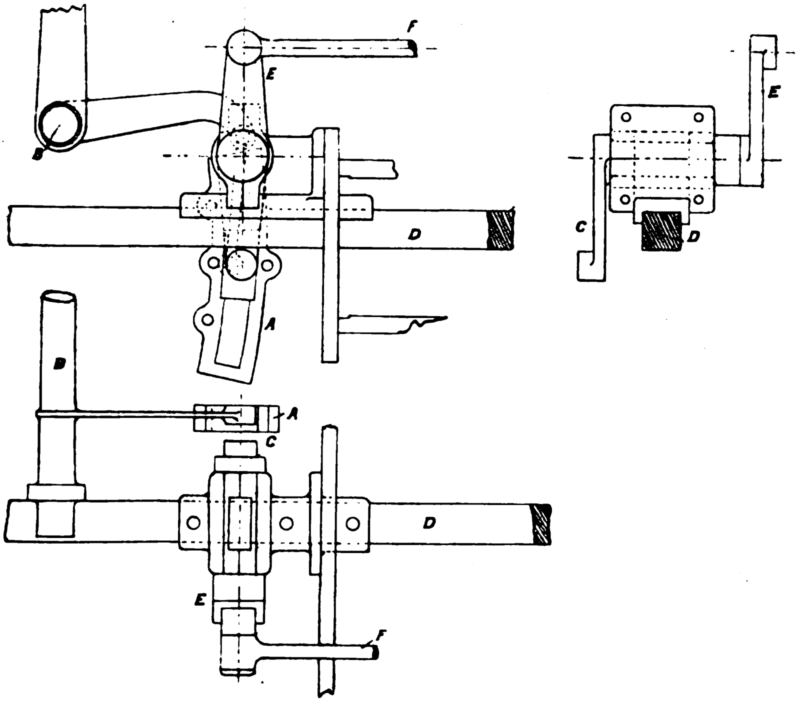

Fig. 233.—Valve-actuating Rocker-arm.

SLIDE-VALVES.

Slide-valves are preferably made of cast iron, working on a cast-iron port face. Balanced valves, of which an example is given in fig. 234, are much employed. In the case of the valve shown, a rectangular space at the back of the valve is enclosed by four strips of cast iron, which work against a planed face on the steam-chest cover. The cast-iron strips are held against the working face by light springs, and the enclosed space is put in communication with the exhaust cavity by a small hole in the back of the valve. Any leakage past the strips is thus disposed of, and the valve is relieved of all pressure but that required to keep it against the cylinder port face. The planed face at the back is either cast with, or bolted to, the valve-chest cover.

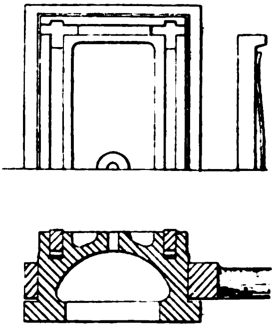

Fig. 234 —Balanced Slide-valves.

The balancing of the valves has led to the more extensive use of the Allan or Trick valve described on p. 168. This is owing to the relief afforded by the balancing, enabling the small surfaces necessary in that form of valve to wear well. Air-inlet valves, held closed by the steam whenever the regulator is open, are always provided when balanced valves are used, in order to prevent the formation of a vacuum in the steam-chest or cylinder.

FRAMES, HORNBLOCKS, AND HORNSTAYS.

The frames, as before described (p. 182), are usually made in two parts—as shown in fig. 141—the "main" frame and the "front rail." The main frame always has upper and lower members, A, B, fig. 235, united by the "pedestals," C, and by oblique members at the ends. The front rail is commonly, as in the American and ten-wheel types of engine, in the form of a single bar only; though it also, as in Mogul, Consolidation, and Decapod engines, is sometimes double. An example of the latter form of frame is also shown in fig. 235. This member of the frame has forged on it lugs, between which the cylinder casting is bolted.

All the bars composing the frame are rectangular in section, and are usually welded together. In some cases, however, a so-called "built-up" frame is employed. In this the lower members, instead of being welded to the pedestals, are bolted thereto. The bar sections are commonly from 3 to 4 ins. square. The front portion of the frame, or front rail, is generally—and preferably—bolted to the main frames.

The side frames are rigidly connected together at the front end by the cylinder and saddle castings, and at the rear end by an ample footplate casting. But the system of intermediate transverse staying is very different from that in British locomotives, probably owing to the bar frame being especially rigid transversely. The lower members are generally connected by several comparatively light bar stays; in addition to which the frames are stayed to the boiler by two or more plates, one of which stretches from side to side between the "guide yokes" or slide-bar brackets. The front ends of the frames are also stayed to the boiler by a pair of oblique braces, as seen in Plate IX.

The frames are commonly planed on both sides, and slotted in pairs at those parts to which the hornblocks, cylinders, and other appurtenances are attached, and are finally drilled. The hornblocks, D, are made of cast iron, one block being in the form of a wedge for taking up wear, and the other being parallel. They are usually held in position by one bolt only, placed at about the centre of the block, instead of by the large number of well-fitted turned bolts or their equivalent found necessary when plate frames are employed. The single bolt is often dispensed with. By taking down the hornstay, E, and loosening the one bolt, if any, in the hornblock, each block can be immediately taken out for examination, repair, or lining up.

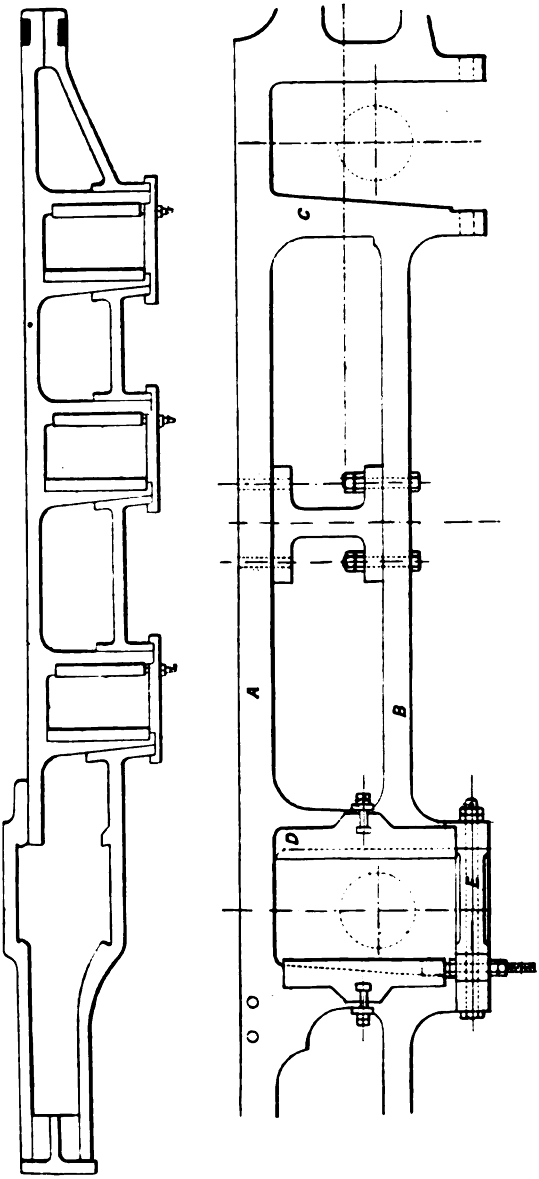

Fig. 235.—Frames, Hornblocks, and Hornstays.

AXLE-BOXES.

The axle-boxes are similar in outline to those used in this country, but the brass is commonly put in differently. The box is slotted out for its reception, as shown in fig. 236, and it is then forced in by a pressure of from 10 to 20 tons. This is open to the objection that it springs the box open slightly, and necessitates the planing of the sides to make it parallel. And when the brasses get loose, which takes place as soon as the crown wears a little, the box springs back, binding tightly on the keep and becoming taper, so as to have a certain play between the horns. The keep calls for no remark. Much larger clearance is allowed at top and bottom of the box than is usual here, owing to the occasionally very large spring deflections.

The hollowed top of the box is commonly filled with trimming and used as an oil cup, no other lubrication but this and the pad of waste in the keep being employed. This is apt to result in imperfect lubrication and waste of oil, the latter a natural result of the abundance of cheap mineral oil in America.

The centres of the axle-boxes in plan are coincident with that of the frame. The bearings seldom exceed 10 ins. in length. Cast iron is used for the boxes in preference to steel, the latter wearing away the cast-iron hubs of the wheels too rapidly.

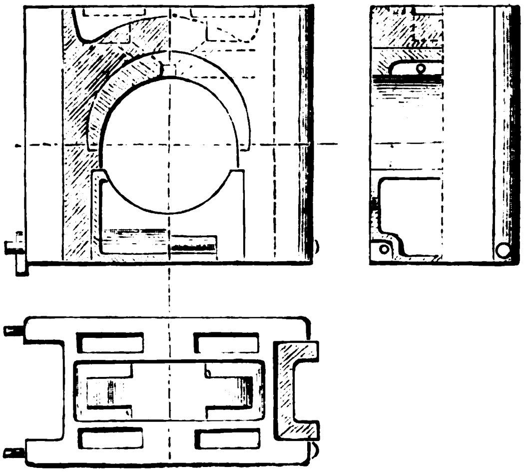

Fig. 236.—Axle-box.

BEARING SPRINGS.

One of the chief points in connection with these is the much more extensive use of the equalising lever—of which an example is shown in fig. 237—between the coupled axles. By this means the weight is automatically distributed, and the springs are enabled

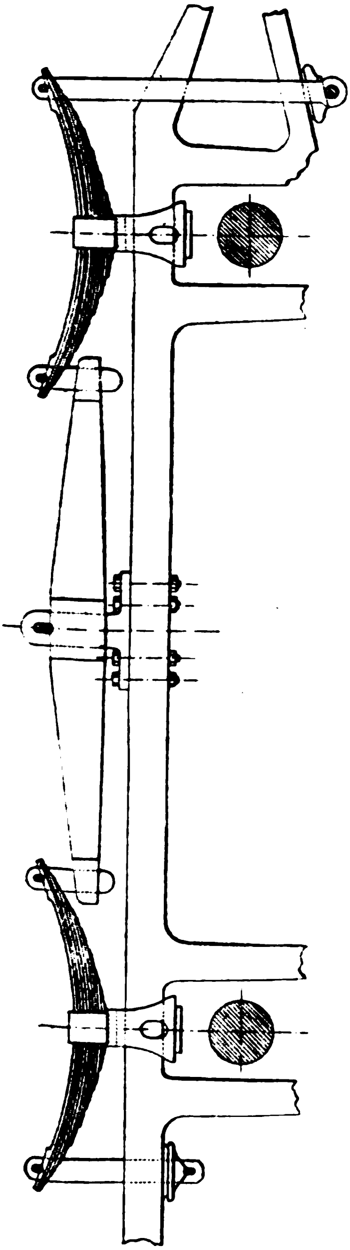

Fig. 237.—Equalising Lever.

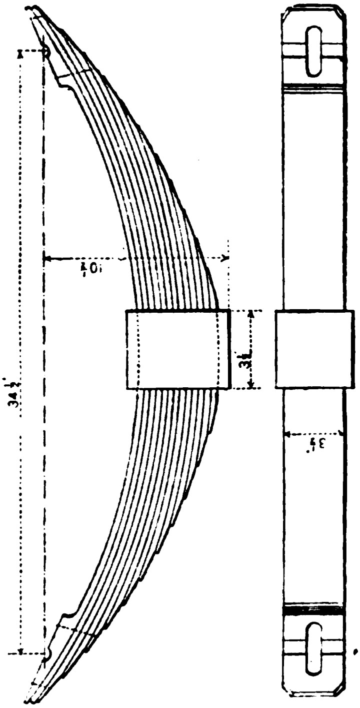

Fig. 238.—Bearing Spring.

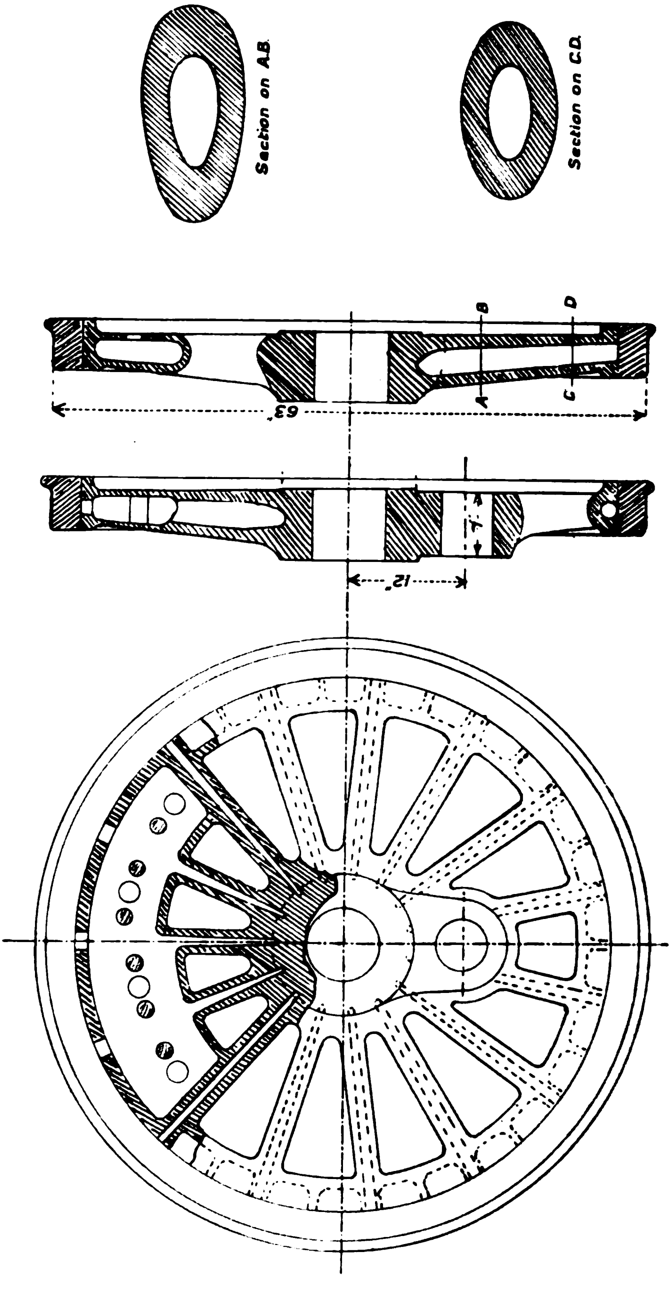

Fig. 239.—Driving Wheel, with Cast-iron Centre.

greatly to assist each other. Any unusually large deflections—which are more common in America than here, owing to the generally lighter permanent way—are communicated throughout the whole series of springs on that side, and the destructive effect on the springs is thereby minimised.

The spring link or hanger is usually passed through a slot (see fig. 238) in the plates of the spring, and in it is inserted a transverse cotter. The cotter rests in a groove in the thickened end of the plate. The weakening of the spring plates by the slot is compensated by the increased thickness, and by making a number of the plates the full length of the spring.

WHEELS.

The four-wheeled American bogie, and the two-wheeled Bissell or "pony" truck, which is very largely employed in America, have been described in Chapter XII., and shown in figs. 143 and 144 respectively.

Driving-wheels with cast-iron centres, formerly employed universally, are still very largely used. Fig. 239 shows a form of wheel exemplifying this method of construction. The spokes are hollow, and in section are egg-shaped or elliptical; the rim is lightened out, and the hub is nearly solid. In order to concentrate the counter-balance as much as possible a lead filling is used. Usually the rim is completely severed at one or two places in moulding, so as to relieve the casting, as far as possible, of internal stress. These places are afterwards fitted with a piece of metal driven in tightly.

The tyres were formerly almost universally held on by shrinkage only, neither lips, screws, nor other safety attachments being used; but British practice in this matter is now adopted to a large extent. Driving-wheel tyres are usually 3 ins. thick, sometimes 4 ins., with a flange somewhat heavier than is usual in British practice.

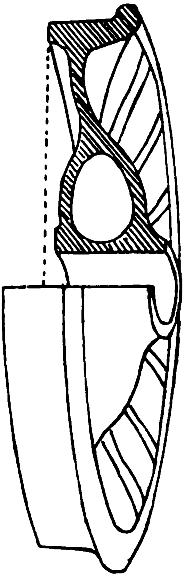

Fig. 240.—Double-plate Cast-iron Chilled Wheel.

A metal with such a small resistance to tensile forces, so liable to fracture without warning under bending stresses, and so subject to internal stress due to unequal contraction in the mould, does not seem especially suitable for making locomotive driving-wheels. Yet it is claimed by American engineers that the results are good, and that there is practical immunity from accident, perhaps due to the strength of the tyre, or, perhaps, to the great skill attained in moulding these wheels. Nevertheless, the recent tendency has been, as in this country, towards the general adoption of cast-steel wheel centres.

The wheel commonly used for tenders and engine trucks is the cast-iron chilled wheel. This is almost peculiar to American practice. Fig. 240 shows the form most used, which is known as the double plate wheel—the two plates springing from the hub as shown. These are made from superior qualities of iron, sometimes with a little steel added. The chill varies in depth from ½ in. to ¾ in. They are forced on the axle with a pressure of about 30 tons. These wheels have been said to be responsible for more accidents than any other detail of American rolling stock.

BOILERS.

The most noteworthy features in American practice in regard to locomotive boilers are, perhaps, the large heating surfaces and large grate areas provided in comparison with the cylinder capacity, and the extensive use of steel. Inside fireboxes are made of steel almost exclusively. But the subject of the use of steel in boilers, and the American practice in regard thereto, have been so fully discussed in Chapter XIII. as to render any further remarks on this subject unnecessary.

Heating Surface, Grate Area, and Flue Area.—In respect to the ratio of heating surface and grate area to cylinder capacity, a Committee of the Master Mechanics Association, reporting in 1888, recommended the following proportions:—Area of cylinder (in inches) × 5·8 = heating surface in square feet. This is equivalent to $d^2 \times 4{\cdot}5$, which, as stated in Chapter IV., is 50 per cent. in excess of that commonly employed in goods engines in this country. But comparison with the ratios adopted in certain recent eight-wheel and ten-wheel engines shows that this ratio must be regarded as a lower limit. In some cases the ratio is as high as $5{\cdot}5\,d^2$; while the average in express engines is about $5\,d^2$. In other words, the areas of heating surface in passenger, relatively to freight, engines in America are roughly in the same proportion as here.

The same Committee also recommended the following proportions:—

$$\text{Total heating surface} \times \frac{1}{11} = \text{firebox heating surface.}$$

$$\text{Total heating surface} \times \frac{1}{70} = \text{grate area.}$$

$$\text{Total heating surface} \times \frac{1}{400} = \text{flue (or tube) area.}$$

These recommendations were based upon the assumption of a piston speed of 800 ft. per minute and a piston stroke of 24 ins., and are intended to apply to ordinary passenger and freight engines in which the fuel is bituminous coal. They are designed to give

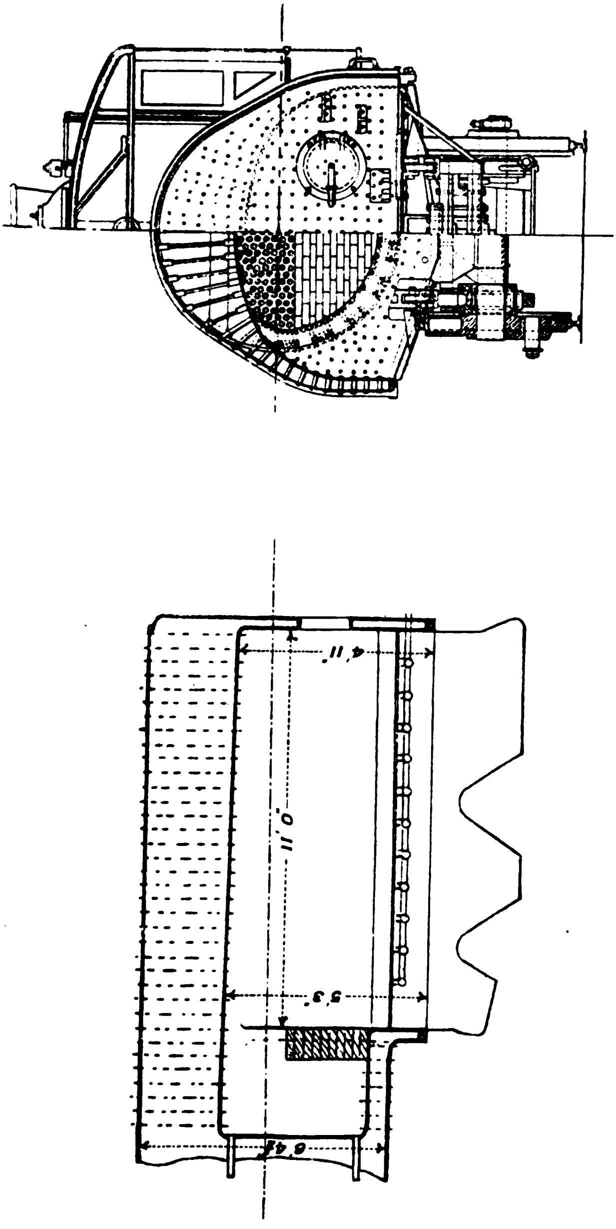

Fig. 241.—Wootten Firebox.

two square feet of heating surface for each horse-power developed when the engine is exerting its maximum continuous effort.

This Committee also remarked upon the wide range within which the grate area may be varied. This is capable of being varied to a greater extent than any other part of the boiler. By making it abnormally large, as in the case of the Wootten and kindred types of boiler, grades of fuel otherwise of little use can be successfully burned.

Fireboxes.—In fig. 241 are shown a longitudinal section and an end view, half in section, of a firebox of the Wootten type. It will be seen that this firebox is extended over the frames on each side to the extreme width of upwards of 8 ft. At the same time it is nearly 11 ft. in length, giving a grate area of nearly 90 sq. ft. The tube plate is at the end of a forward extension of the firebox, which projects some distance into the boiler barrel. This portion is partly separated from the extended body of the firebox by a brick firebridge, and forms a combustion chamber. There are two fire doors, one on each side of the centre-line of the engine.

The Strong firebox is described on p. 211, and the Belpaire firebox —a type very largely adopted in American locomotives—has also been described and illustrated in Chapter XIII.

In this—and in American fireboxes generally—the "pinching in" of the lower portion is very marked. This arises from the very large boiler diameters, and, in cases where the lower portion of the firebox is placed between the frames, from the thickness of the frame bars.

The firebox is, however, generally mounted above the driving-axles and often above the frames. This has the effect of raising the boiler considerably, and at the same time necessitates a shallower firebox than is used here.

The brick "arch" is usually a rectangular slab composed—as

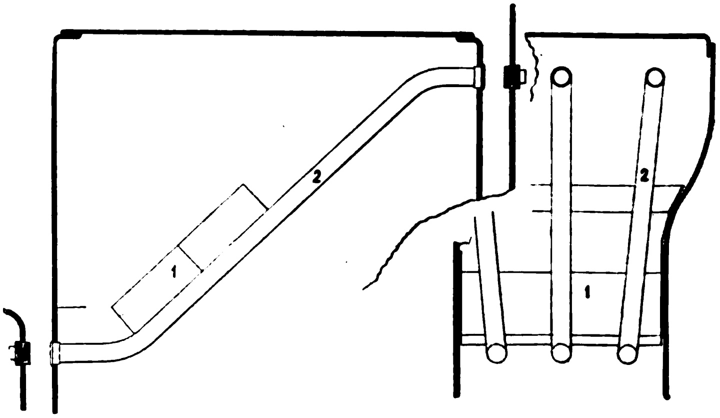

Fig. 242.—Brick Arch and Water Tubes.

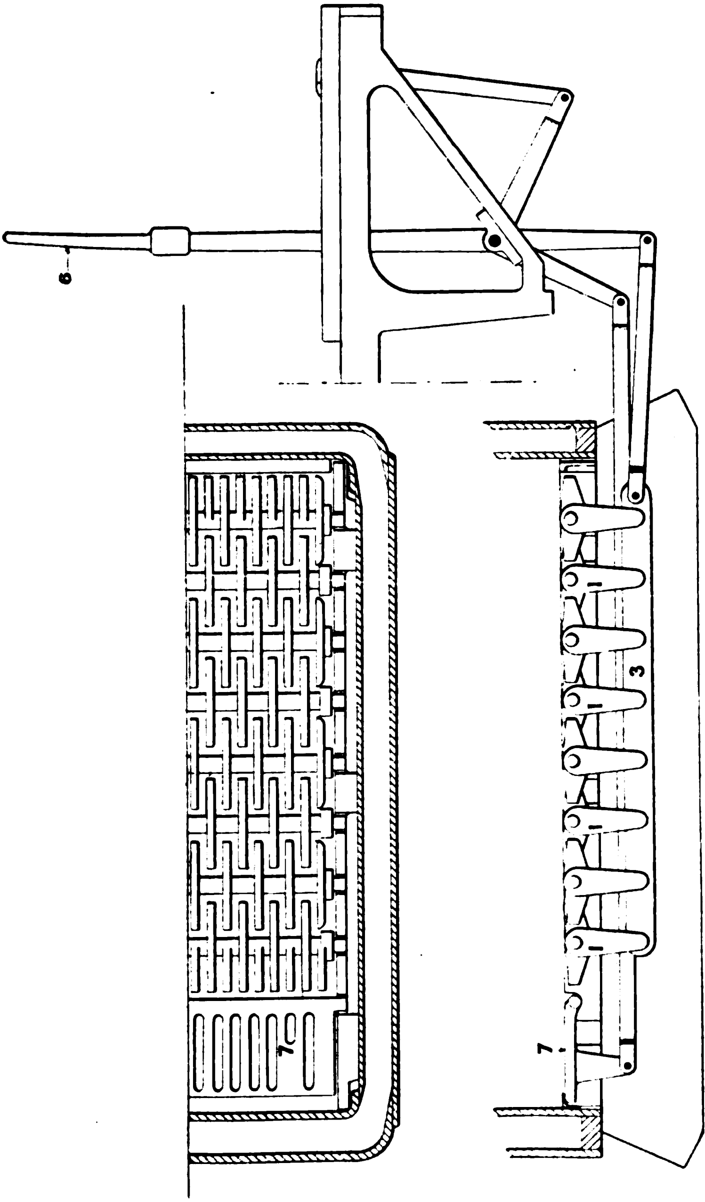

Fig. 243.—Rocking Grate.

shown in fig. 242—of blocks, 1, about 6 ins. thick, supported on water tubes, 2, extending from the tube plate to the firebox crown or back plate. The width of this "arch" is equal to, or nearly equal to, that of the firebox. The baffle plate is very little used, but the "arch" is extended much higher and further backwards than is the case in this country. In many of the most recent engines, however, the arch and baffle are almost exactly as in the British locomotive.

Grates.—The grates used for bituminous coal have rocking fire bars, of various forms, arranged so that they can be worked from the footplate by a hand lever whenever it is desired to break up the fire and clear out clinkers. A common form of rocking grate is called the "finger" grate, from the fire bars having a series of fingers on each side which project between similar fingers on the adjacent bars. An example is shown in fig. 243. The bars each have depending arms, 1, all pivoted to a rod or bar, 3, underneath the grate, which can be reciprocated by the hand lever, 6, mentioned above. By this means a rocking movement can be given to all the fire bars simultaneously. At the front end of the grate is a "drop-plate," 7, for discharging purposes. This, too, is furnished with means for operating it from the footplate.

The largeness of the grate areas adopted is partly to be accounted for by the nature of the fuel employed. Thus wood has been much used, and still is on some railways. Anthracite coal also is very largely burnt. To burn this successfully a very large grate area is required, and large quantities must be put in at each firing. In grates for this fuel water-tube fire bars are often made use of. These are generally disposed in groups of three, with an ordinary removable solid bar intervening between each set.

In place of the solid fire-hole ring of British practice, the inner and outer plates are usually flanged, and the two are rivetted together.

Tubes.—Iron tubes are much more used than brass ones. The tubes (fig. 244) are usually put in with a short piece of copper pipe

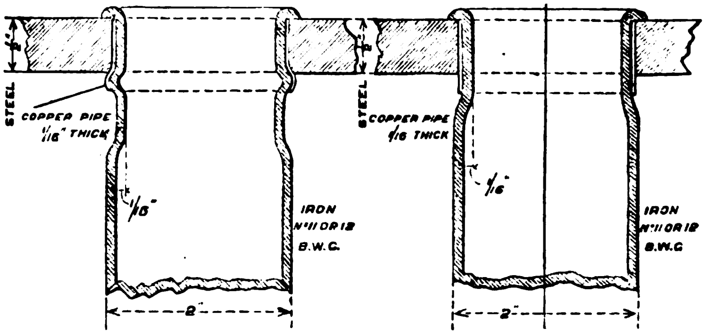

Fig. 244.—Tube-joints.

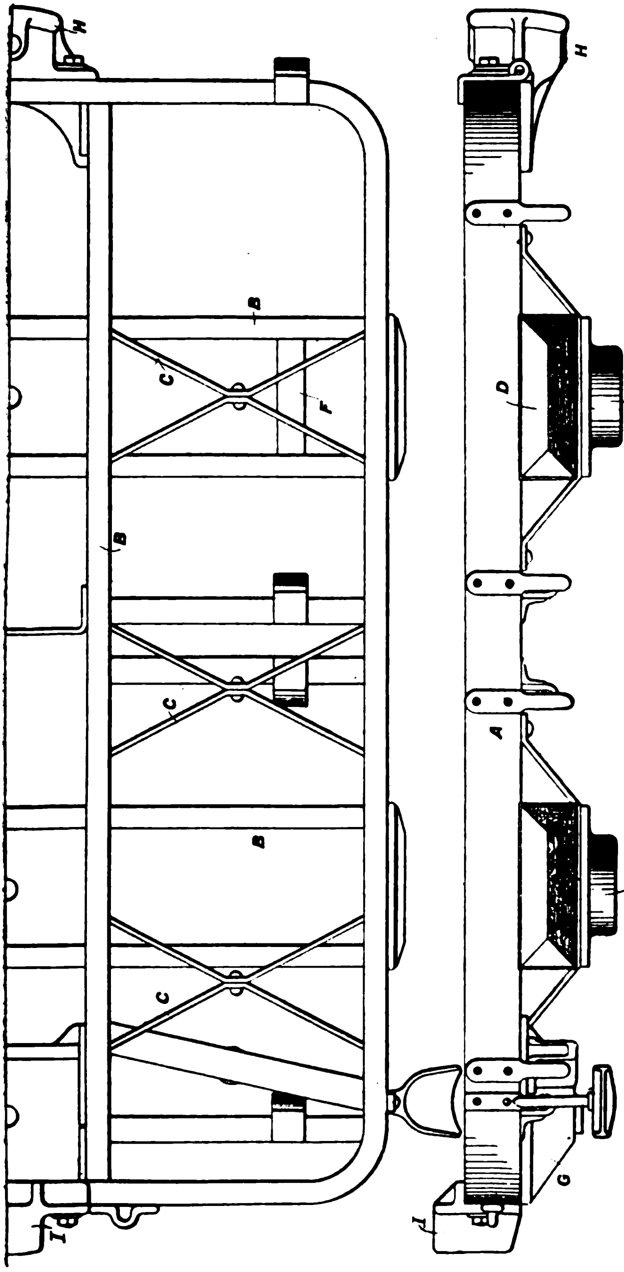

Fig. 248.—Tender Frame.

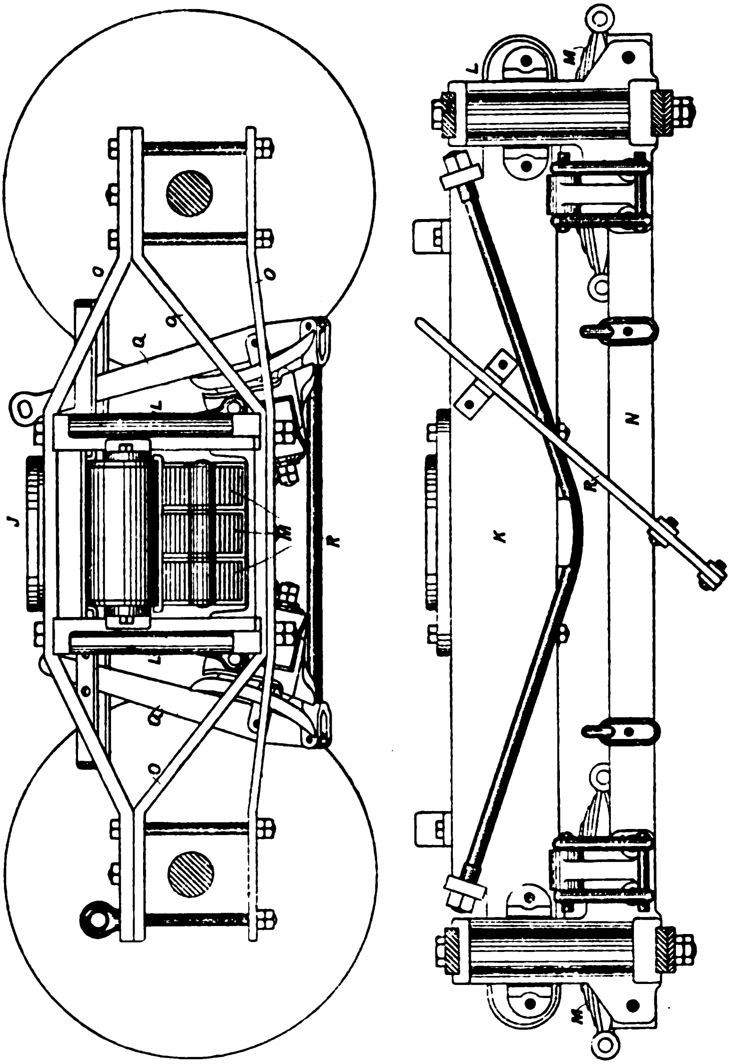

Fig. 249.—Details of Tender Bogie.

the latter figure the bogie is seen in side elevation, and in the lower view in front elevation, with the forward portions of the side frames removed. The main frame is composed of a rectangular frame, A, fig. 248, of channel iron, stiffened by transverse and longitudinal channel irons, B, and oblique bracing, C. This is secured to the bolsters, D, to which the plates carrying the bogie centre pin, E, is more nearly vertical, in which direction the resisting power of the road is at a maximum.

In the second place, the raising of the boiler is the readiest means for obtaining an increase in the power of the locomotives, since it not only permits of enlarged boiler power, but affords more space for the machinery. Further, as the boiler forms only about a quarter of the weight of the engine, raising the former by any given amount raises the centre of gravity of the whole locomotive by about a fourth of that amount.

The limit of safety in the raising of the centre of gravity would be reached when the stability of the locomotive in running on curves at high speeds began to be endangered. The centre of gravity of the highest American locomotives is, however, still well below that of the heaviest loaded wagons actually in use. It can, therefore, safely be raised even yet without endangering the stability. But the height is limited by other considerations than those of stability. The height of bridges and tunnels is probably now the chief factor in the practical determination of this limit.

to the resulting large employment of single line railways, tended to foster considerably the growth in weight of goods trains, and this in turn has contributed to the enlargement of the engine and the increase in the number of coupled axles. It has also, probably, been an important factor in promoting the adoption of outside-cylinders, by which, among other considerations, the necessity for pits is avoided.

In Germany, Austria, and Italy outside cylinders are employed almost exclusively; and, in France, only on the Northern and Western Railways are inside cylinders employed in express engines.

Notwithstanding the many differences that may be pointed out between Continental and British practice in locomotive design there is, in general, a broad similarity between them; in many respects closer than that, say, between British and American engines. It is not, however, intended to institute in this chapter an elaborate triangular comparison. Certain of the types of locomotives briefly described in the following pages will, indeed, be seen to resemble those in use in this country, while others differ considerably; the plan has been to give, as far as possible, representative examples. Following the leading particulars of the various forms of locomotives will be found a somewhat more detailed description of certain important elements in which differences occur.

The gauge of Continental railways may be said, broadly speaking, to be the same as here. Although numerous narrow-gauge railways exist—with a gauge of one metre—the prevailing gauge throughout central Europe is 4 ft. 8½ ins.; the most important exceptions being the Russian standard gauge of 5 ft. and the 5 ft. 6 ins. gauge of Spain and Portugal. All the engines described below, with the exception of the rack locomotives, are of the ordinary 4 ft. 8½ ins. gauge.

TYPES OF FRENCH LOCOMOTIVES.

Four-coupled Express Passenger Engines.—1. Fig. 250 shows an express four-coupled locomotive with a leading four-wheel bogie and inside cylinders employed on the Western Railway of France. This resembles the bogie express passenger engines employed in this country. The driving and trailing coupled axles are placed one immediately in front of, and the other immediately behind, the firebox. The bogie has a certain amount of side play. These engines have a cylinder diameter of ·46 m. (18⅛ ins.) and a stroke of ·66 m. (26 ins.). The diameter of the coupled wheel is 2·04 m. (6 ft. 8⅜ ins.), and the adhesive weight in working order is 27·5 tons. The total weight is 43·5 tons.

2. In fig. 251 is shown a four-coupled express of the Eastern Railway of France. This, also, has a leading bogie, and has the firebox disposed between the coupled axles, but in other respects differs widely from the example given above. Thus both inside

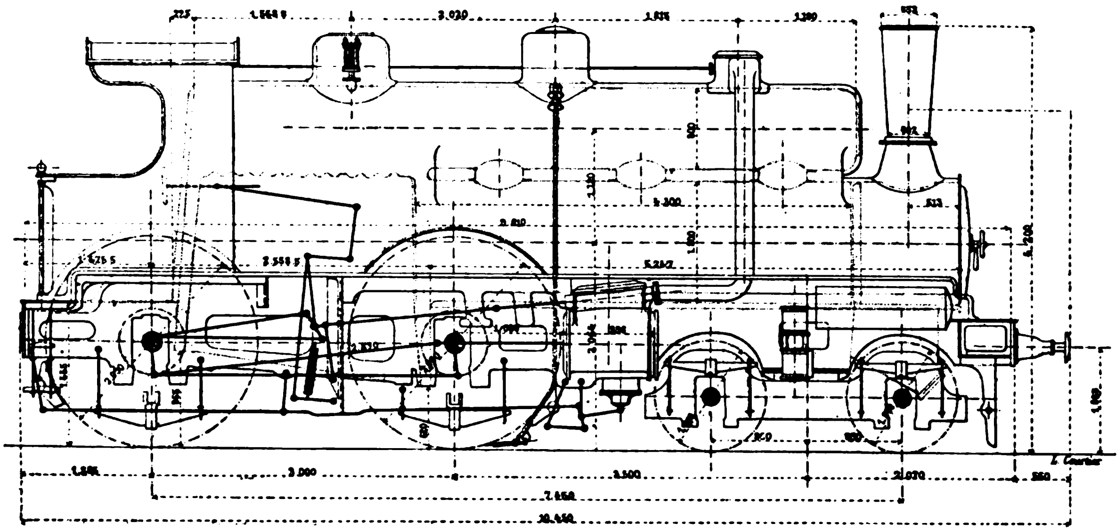

Fig. 251.—Express Engine of Eastern Railway of France.

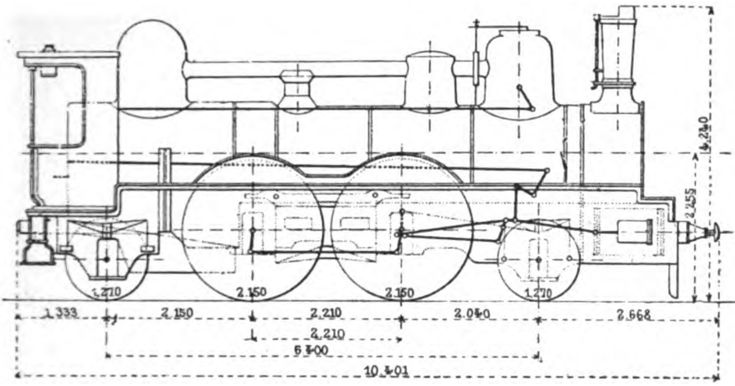

Fig. 252.—Express Engine of Paris and Orleans Railway.

Six- and Eight-Coupled Engines.—1. A form of six-coupled outside cylinder locomotive is in use on the Paris and Orleans Railway which has a supporting axle in front of the coupled wheels, so that it somewhat resembles the Mogul type of American engine. It is designed for service on a road with gradients in some parts as steep as 1 in 50 or 1 in 40, and with curves of 250 m. (12½ chains) radius. The cylinder is placed behind the leading axle, and drives the middle one of the three-coupled axles. The firebox extends downwards between the two rear ones. The boiler is of the Tenbrink and Polonceau construction, having a water chamber in the firebox, and two steam domes connected by a horizontal pipe of 140 mm. (5⅝ ins.) in diameter. The tubes are 43 mm. (1¾ ins.) diameter inside, and have a length of 4·44 m. (13 ft. 3¼ ins.). The frame plates are ·30 mm. thick ($1\frac{3}{16}$ ins.). The diameter of the cylinder is ·48 m. (18⅞ ins.), and its stroke is ·68 m. (26¾ ins.). This engine is fitted with the Wenger continuous compressed air brake, which is briefly described later.

2. A six-coupled outside cylinder engine of the Paris and Orleans Company is shown in fig. 253. In this, the firebox end of the boiler and frame overhangs the wheel-base, which has a total length of 3·43 m. (11 ft. 3 ins.). The wheels are 1·35 m. (4 ft. 5¼ ins.) in diameter, and the adhesive weight is 38 tons. The total heating surface is 147·8 sq. m. (1590 sq. ft.).

3. In fig. 254 is shown a powerful eight-coupled engine employed on the Southern Railway of France. In this engine the cylinders and gear are outside. All the axles are in front of the firebox, which overhangs the wheel base at the back. The cylinders have a diameter of ·54 m. (21⅜ ins.), and a stroke of ·61 m. (24 ins.), and the driving and coupled wheels a diameter of 1·21 m. (3 ft. 11⅝ ins.). The weight of the engine in working order is 53 tons. The aggregate heating surface is 188 sq. m. (2220 sq. ft.).

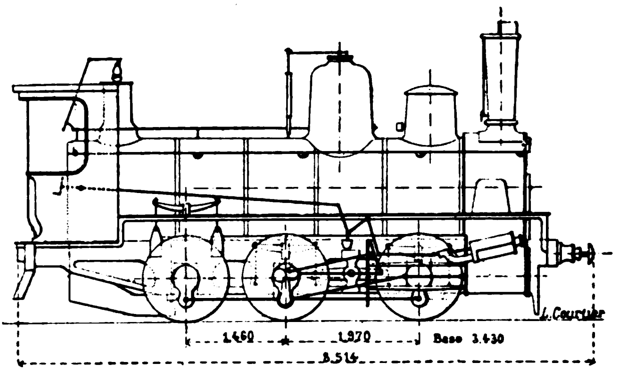

Fig. 253.—Six-coupled Engine of Paris and Orleans Railway.

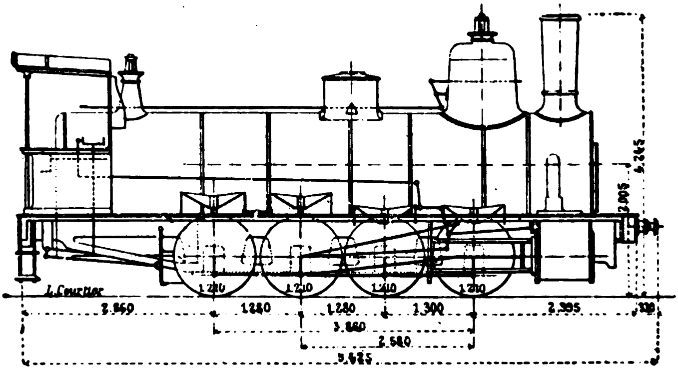

Fig. 254.—Eight-coupled Engine of Southern Railway of France.

Tank Engines.—This form of engine is not employed in France nearly so largely as in this country; but nevertheless finds application in local passenger traffic, and in shunting. The wheels are usually six coupled, and the cylinders inside; and in many cases there is a bogie or a radial axle at one end of the engine or the other.

1. An example of a tank engine of the Western Railway of France is shown in fig. 255. This has inside cylinders and frames, and six coupled wheels of 1·54 m. (5 ft. 0⅝ in.) diameter. The tanks are at the sides, and the coal bunkers at the rear. The adhesive weight—43 tons—is the entire weight of the engine. The diameter of the cylinders is 4·30 m. (17 ins.), and the stroke is ·60 m. (23⅝ ins.). The grate area is 1·28 sq. m. (13·75 sq. ft.), and the total heating surface is 96·20 sq. m. (1040 sq. ft.).

and the amount of heating surface are practically the same as in the 1892 type of engine, which this engine was designed to supersede. In the earlier type the grate area was 2·32 sq. m. (25 sq. ft.), and the heating surface 147·8 sq. m. (1590 sq. ft.).

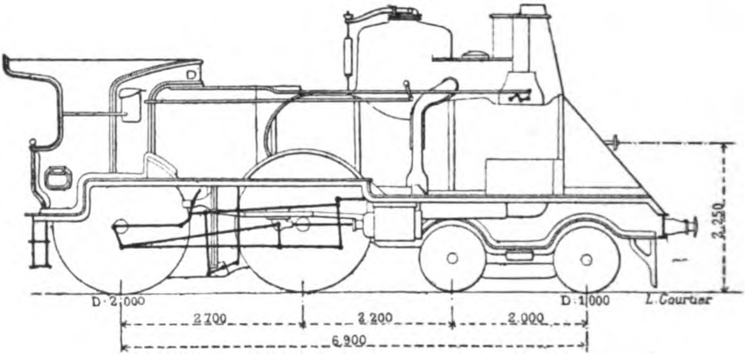

Fig. 256.—Four-cylinder Express Compound Engine of the Paris, Lyons, and Mediterranean Railway.

2. The following are particulars of a type of four-cylinder, four-coupled, compound express engine employed on the Northern Railway of France. This engine is shown in fig. 257. The high-pressure cylinders are outside and the low-pressure cylinders inside. The high- and low-pressure cranks on each side of the engine are set at an angle of 162° to each other in order to facilitate starting. This insures admission to one or other of the cylinders in whatever position the cranks may be. In addition, also, to a direct admission of steam to the intermediate reservoir, a three-way valve is provided for enabling the exhaust from the high-pressure cylinder to be directed into the atmosphere so as to avoid an accumulation of back pressure.

The stroke is ·64 m. (25¼ ins.), and the diameters of the high- and low-pressure cylinders are ·34 m. (13½ ins.) and ·53 m. (21 ins.) respectively. This gives a ratio of 2·42. The driving and coupled wheels are 2·114 m. (6 ft. 11⅜ ins.), and the bogie wheels 1·04 m. (3 ft. 5 ins.) in diameter. The wheel-base to the bogie centre is 6·43 m. (21 ft 1¼ ins.), and the total wheel-base is 7·33 m. (24 ft. 0¾ in.).

The mean diameter of the boiler is 1·26 m. (4 ft. 1⅝ ins.), the length of the tubes is 3·9 m. (12 ft. 9⅝ ins.), and of the grate 2·013 m. (6 ft. 7¼ ins.). The thickness of the boiler plates is 18 mm. ($\frac{11}{16}$ ins.), and the height of the boiler centre above the rails is 2·24 m. (7 ft. 4¼ ins.). There are 202 tubes of 45 mm. diameter ($1\frac{13}{16}$ ins.), giving, with the firebox, a total heating surface of 112·55 sq. m. (1210 sq. ft.). The grate area is 2·04 sq. m. (22 sq. ft.). The total weight of the engine is 47 tons, distributed thus:—On bogie, 17 tons; on leading driving-axle, 15·1 tons; on trailing-drivers, 14·9 tons. The tender carries 3000 gallons of water and 4 tons of coal.

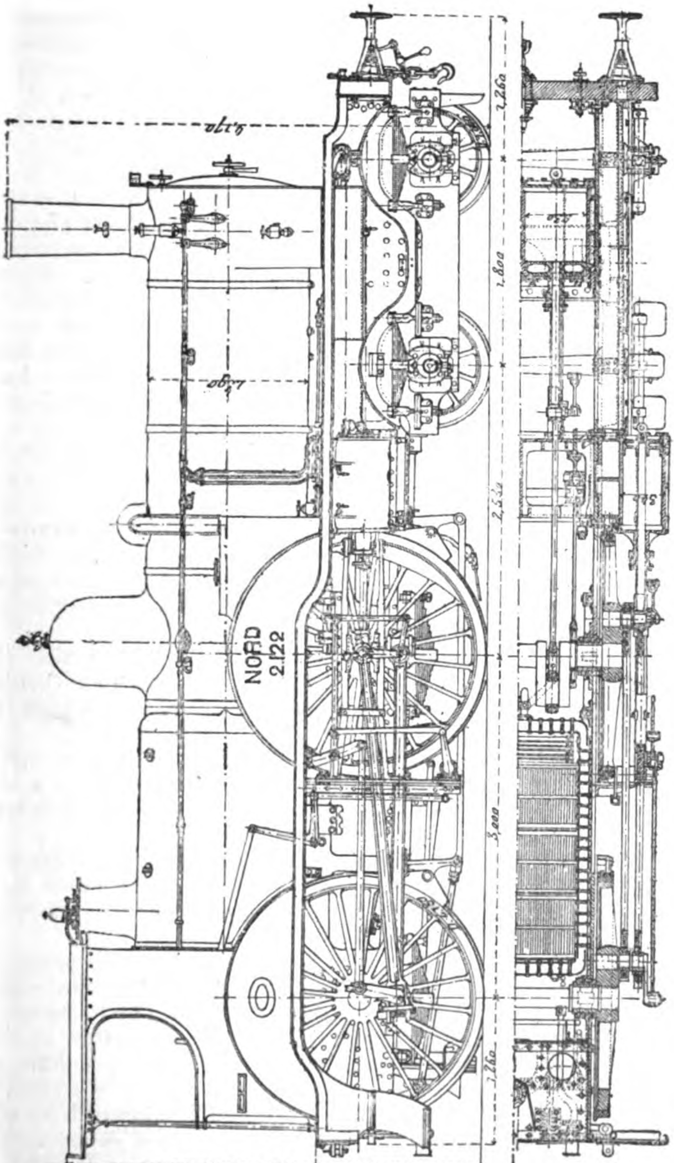

Fig. 257.—Four-cylinder Express Compound Engine of Northern Railway of France.

Heilmann Locomotive.—Some reference ought here to be made to this remarkable locomotive—although it can scarcely yet be said to have emerged from the experimental stage—on account of the clearness with which it brings into view certain considerations relative to the efficiency of locomotives of ordinary construction.

The Heilmann engine is styled an electric locomotive, although it might, with equal propriety, be called a steam locomotive. It is, in fact, both: an electric current is generated by an accurately balanced, inverted vertical compound steam engine directly coupled to a dynamo, and is supplied to a series of electric motors, of which there is one on each of the eight carrying axles. The coal, water, boiler, engine, and dynamo are all mounted on a single platform carried on two bogies. These engines have been very successfully tried on the Western Railway of France.

At first sight it might seem that the double conversion of the energy of the steam engine, first into electric energy and thence again into mechanical movement, could entail nothing but loss; but there are various considerations on the other side that have led to the formation of great expectations in regard to this new departure.

1. In respect to engine and boiler efficiency: This construction enables the boiler to be much larger than in the ordinary design of locomotive and thus permits of more economical working. It also enables high speeds to be attained while the engine still runs at such a speed as to avoid wire-drawing and its attendant losses. Further, maximum tractive power may be exerted and steep gradients ascended while yet the engine works under economical conditions as regards speed and grade of expansion.

2. In respect to starting: All the axles are driven so that the whole of the weight is utilised for adhesion; and maximum turning effort may also be exerted on the axles at starting, almost from the beginning.

3. In respect to damage of the permanent way (especially bridges): The destructive effect of the vertical components of the centrifugal forces due to the balance weights is entirely avoided, as well as the lateral action or "shouldering" of the engine.

In certain experimental runs, in 1897, with two large engines of this construction—each weighing about 114 tons—the easy starting, and the stability and smoothness of running at high speeds were strongly marked features of the trials.

The platform on which the boiler and machinery are mounted has a length of 17·69 m. (58 ft.) and is supported on two eight-wheel bogies, each having a wheel-base of 4·1 m. (13 ft. 5¼ ins.). The boiler has a total heating surface of 185·47 sq. m. (1990 sq. ft.) and a grate area of 3·34 sq. m. (35·9 sq. ft.); its length between tube plates is 3·8 m. (12 ft. 5⅝ ins.).

The engines, built by Messrs. Willans and Robinson, have six single-acting tandem pairs of high- and low-pressure cylinders, to which the distribution of steam is effected by six sets of vertical

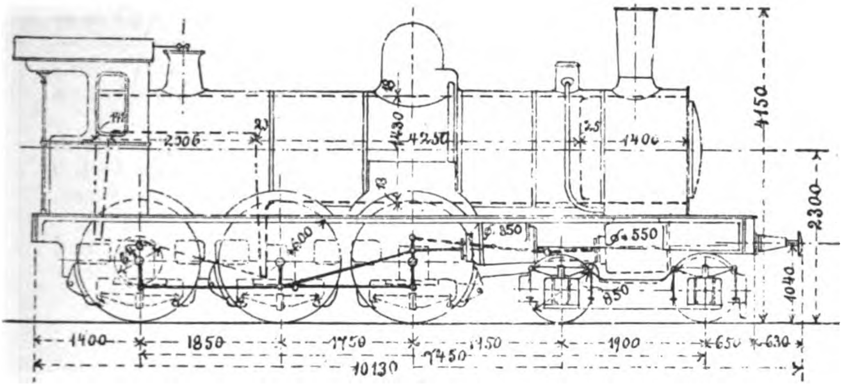

Fig. 260.—Four-cylinder Express Compound Engine of State Railway of Baden.

Goods Engines.—A two-cylinder compound goods engine with eight wheels coupled is shown in fig. 261. This is one of the 1895 engines of the Prussian State Railway. The high- and low-pressure cylinders have, respectively, diameters of ·53 m. (21 ins.) and ·75 m. (29⅝ ins.) and a stroke of ·63 m. (24 13/16 ins.). The wheels are 1·25 m. (4 ft. 1¼ ins.) in diameter.

The total heating surface is 138 sq. m. (1485 sq. ft.), and the grate area is 2·3 sq. m. (24¾ sq. ft.). The mean diameter of the boiler is 1·5 m. (4 ft. 11⅛ ins.), and the length of the tubes 4·1 m. (13 ft. 5½ ins.) The working pressure is 180 lbs. per square inch.

The weight, empty, is 45¼ tons, the adhesive weight is 52¼ tons, and the weight in working order the same.

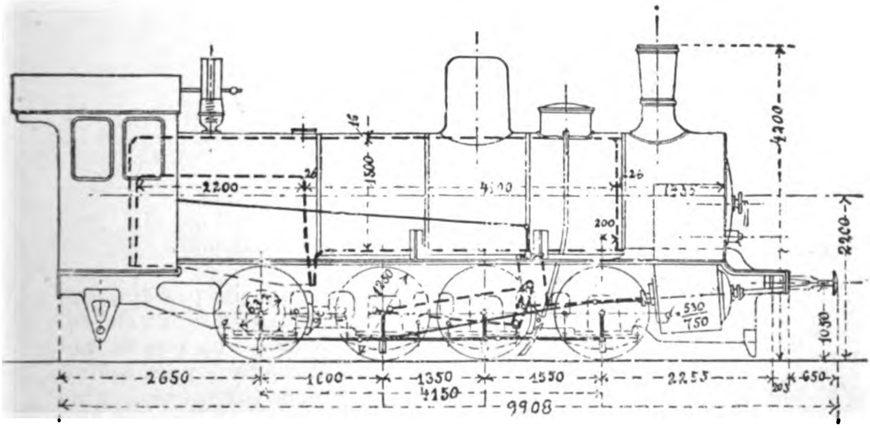

Fig. 261.—Two-cylinder Compound Goods Engine of Prussian State Railway.

Tank Engines.—The following particulars of a four wheels coupled tank engine of the Prussian State Railway are given as exemplifying the general proportions of engines of this class:—This is a simple engine with cylinders of ·42 m. ($17\frac{9}{16}$ ins.) diameter, and ·6 m. ($23\frac{5}{8}$ ins.) stroke. The coupled wheels have a diameter of 1·58 m. (5 ft. $2\frac{1}{4}$ ins.).

The mean diameter of the boiler is 1·22 m. (4 ft.), and the length of the tubes 3·6 m. (11 ft. $9\frac{1}{4}$ ins.). The working pressure is 180 lbs. per square inch. The total heating surface is 90 sq. m. (968 sq. ft.), and the grate area 1·6 sq. m. (17·2 sq. ft.).

The weight in working order is 41 tons; empty, 32 tons; and the adhesive weight is $27\frac{1}{2}$ tons. The water tanks have a capacity of 5 cub. m. (1100 gals.) and the bunkers carry $1\frac{3}{4}$ tons of coal.

TYPES OF BELGIAN LOCOMOTIVES.

1. Fig. 262 shows an engine of a kind much employed in Belgium. It has four coupled wheels, and leading and trailing supporting pairs of wheels. This engine has inside cylinders and outside frames. The springs are equalised throughout, both on each side and, through the medium of a transverse beam at the front, across the engine. The cylinders are ·50 m. ($19\frac{3}{4}$ ins.) in diameter, and have a stroke of ·60 m. ($23\frac{5}{8}$ ins.). The driving and coupled wheels are 2·10 m. (6 ft. $10\frac{3}{4}$ ins.) in diameter.

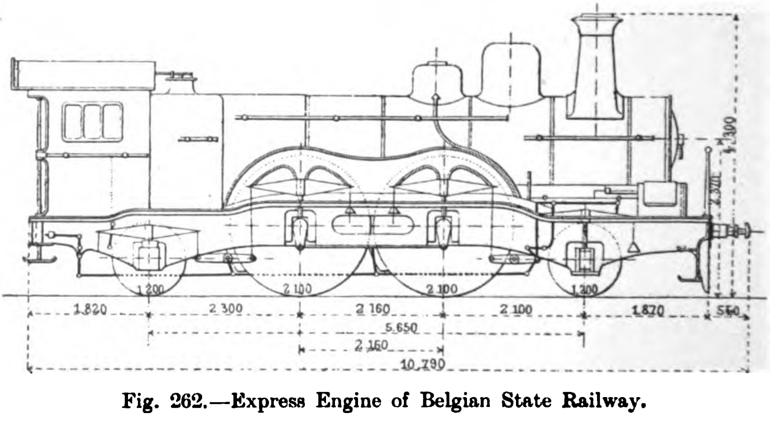

Fig. 262.—Express Engine of Belgian State Railway.

The most noteworthy feature in this engine is, perhaps, the extensive grate area provided. This amounts to 4·82 sq. m. (52 sq. ft.) In order to obtain this area the firebox—which is of the Belpaire type—is not only very long, but, at the back part, behind the coupled wheels, is extended laterally over the frames. This gives the grate in plan a T-shape. The smokebox is of the front extension type, and is surmounted by a square chimney.

SWISS MOUNTAIN LOCOMOTIVES.

Mountain locomotives are of two kinds, some acting by adhesion alone, and others by rack and pinion gearing. Adhesion locomotives are successfully employed on gradients ranging generally from about 1 in 70 to 1 in 30; and the rack locomotives, from the latter to about 1 in 4. Both types are largely employed in various portions of Europe, but the examples given below of Swiss mountain locomotives may be considered fairly typical.

Adhesion Mountain Locomotives.—1. A very powerful form of compound adhesion locomotive, especially designed for goods traffic on mountain railways, is that shown in fig. 266, and known as Mallet's double-bogie compound engine. A tank engine of this kind, weighing 87 tons, is employed on the St. Gothard Railway. This engine is carried on twelve wheels, which, in order to utilise the adhesion due to the whole weight of the engine, are all driven. To enable this to be accomplished while yet retaining the necessary flexibility of the wheel-base, the wheels are coupled and driven in two sets of six; the boiler and frames resting on two six-wheeled bogies, each of which carries its own set of two high-pressure, or two low-pressure, driving cylinders and gear. The steam pipes are made with articulated connections, so as to permit of the movements of the bogies relatively to the boiler.

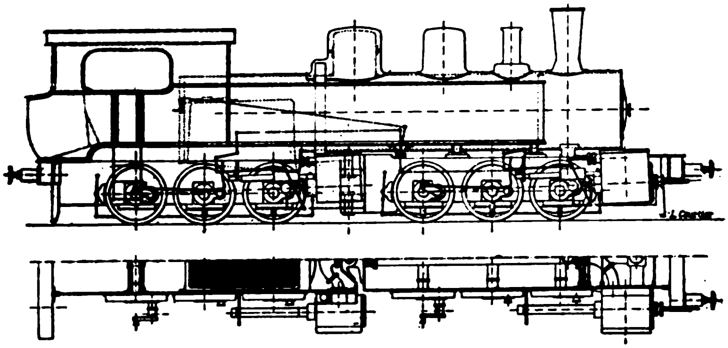

Fig. 266.—Mallett's Double-bogie Compound Locomotive.

The steepest gradient on the St. Gothard Railway is 2·5 per cent., or 1 in 40, on the northern, and 2·7 per cent., or 1 in 37, on the southern ascent. The mean over the mountain section is 1·2 per cent., or 1 in 83. The engine in question, with a load of 200 tons, is able to run at a speed of 20 km. (12·5 miles) per hour up the maximum grade of 1 in 37. The consumption of fuel is 67 lbs. of coal per engine mile, on the average, over the whole mountain section, but reaches nearly 160 lbs. per mile on the steepest grade.

The high-pressure cylinders have a diameter of ·40 m. (15·7 ins.), the low-pressure of ·58 m. (22·8 ins.), and each has a stroke of ·64

m. (25·2 ins.). The twelve wheels are each 1·23 m. (4 ft.) in diameter; the working boiler pressure is 12 atmos. (177 lbs. per sq. in.); the grate area is 2·19 sq. m. (23·6 sq. ft.), and the total heating surface, 154·3 sq. m. (1660 sq. ft.).

2. A six-coupled compound express engine, weighing 65 tons, with a leading four-wheel bogie, is a type also employed for service over the whole of the St. Gothard system. This is shown in fig. 267. These engines are able, with a load of 120 tons—six saloon carriages and a luggage van—to run up the maximum grades of

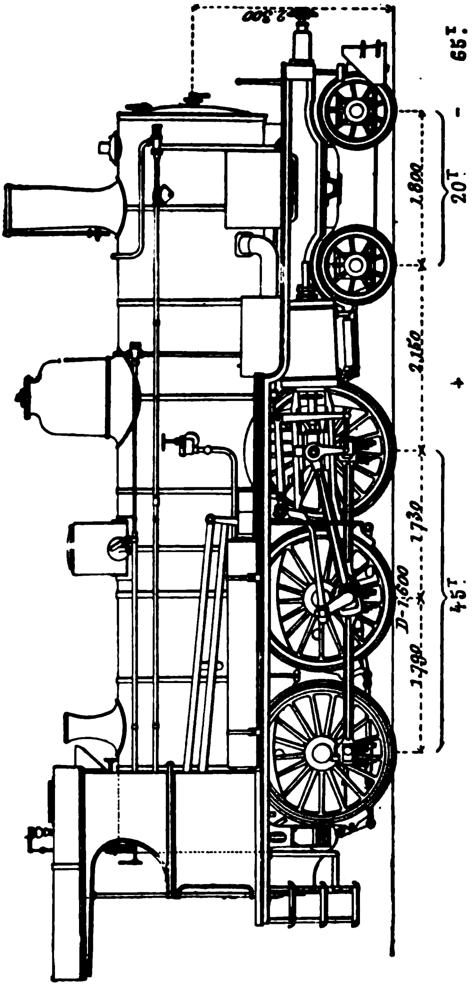

Fig. 267.—Six-coupled Compound Express Engine of St. Gothard Railway.

1 in 40 and 1 in 37 at a speed of 48 km. (30 miles) per hour. At the summit and on the valley sections they attain a speed of 105 km. (65 miles) per hour.

These engines are constructed in two forms—one with three cylinders and the other with four. In the former, the high- and low-pressure cylinder diameters are ·44 m. (17⅜ ins.) and ·48 m. (18⅞ ins.) respectively, and in the latter, ·35 m. (13¾ ins.) and ·53 m. (20¾ ins.). The stroke in each case is ·60 m. (23⅝ ins.). The driving-wheels are 1·60 m. (5 ft. 3 ins.) in diameter, and the working pressure 14 atmos. (207 lbs. per sq. in.). The grate area is 2·3 sq. m. (24¾ sq. ft.), and the heating surface 165 sq. m. (1775 sq. ft.).

Rack Locomotives.—1. An example of a rack locomotive constructed for the Brienz and Rothorn Abt Rack Railway is shown in fig. 268. This railway has a gauge of ·80 m. (2 ft. 7½ ins.), and a gradient where steepest of 25 per cent., or 1 in 4. The sharpest curves have a radius of 60 m. (3 chains). The rack is composed of two bars placed so that the teeth in each are adjacent to the spaces in the other. The breadth of the rack bars is 2·5 cm. (1 in.), the length of the teeth from root to point is 4 cm. (1·6 in.), and the thickness of each tooth at the base is 5 cm. (2 ins.).

The engine has three axles, the driving pinions, *a*, being mounted on the two leading ones. These are rotated by a connecting-rod jointed to a rocking beam which is reciprocated by the piston-rod. The cylinders—of which there are two—are ·30 m. (12 ins.) in diameter, and have a stroke of ·55 m. (22 ins.). These, through the medium of the rocking beam, act on the connecting-rod at a leverage of 1·4 to 1.

The wheels, which run loose, are ·653 m. (26·1 ins.) in diameter; and the pinions at the pitch circle have a diameter of ·573 m. (22·9 ins.). The train load the engine can push up the inclines of 1 in 4, where the curves are sharpest, is about 27·9 tons; the maximum actual train load is about 26 tons, including the engine itself.

The rigid wheel-base is 1·41 m. (4·62 ft.), and the total wheel-base is 3 m. (9·48 ft.). The heating surface in the firebox is 3·7 sq. m. (39·83 sq. ft.), and in the tubes 33·5 sq. m. (360·7 sq. ft.); total 37·2 sq. m. (389·65 sq. ft.). The grate area is ·62 m. (6·65 sq. ft.). The working pressure is 14 atmos. (207 lbs. per sq. in.).

When empty, the engine weighs 13 tons. When in working order, it carries 14 cwts. of coal, 1·2 tons of water in the tank, and an equal quantity in the boiler; and its total weight is 17 tons.

Its total length, exclusive of the buffers, is 5·51 m. (18 ft.), width 2 m. (6·56 ft.), and height 3 m. (9·84 ft.).

The means for braking the engine and regulating the descent are of supreme importance in engines of this description. The system employed is that first used in the Riggenbach engines. The cylinders suck in air during the descent, and pump it into the steam pipe. Here it accumulates, and, unless let off, soon, by its back pressure, arrests all motion of the engine. For letting off portions of the air a special pipe with a valve situated in the cab is provided. The descent is regulated by allowing the air to escape gently. On checking the escape the train stops almost immediately.

There are fitted in addition two powerful screw brakes—one for normal use in stations and in shunting; the other for use in case the first two fail. These brakes act through lever gear on discs, *b*, *b*, fitted on both pinion axles, and either one alone is able to arrest the train almost immediately on the steepest grade.

2. In fig. 269 is shown a form of four-cylinder engine designed so as to be capable of acting either by rack or by adhesion alternatively. The two outside-cylinders drive the adhesion wheels, and the two inside cylinders work the rack pinions.

3. The following are particulars of a four-cylinder compound engine of similar construction as regards the alternative rack and adhesion working, employed on the St. Gall and Gais Mountain Railway.

The two sets of cylinders can be worked simple, either together or separately; or all four can be worked compound. The cylinders each have a stroke of ·40 m. (15·17 ins.), and diameters of ·36 m. (14·16 ins.). The adhesion wheels are ·80 m. (31·4 ins.) and the trailing-wheels are ·555 m. (21·76 in diameter. The rack pinion—which has 27 teeth—is of ·86 m. (33·86 ins.) diameter at the pitch circle; and the driving pinion on the crank shaft—with 13 teeth—is ·40 m. (15·17 ins.) in diameter.

It will be seen that the inside cylinders work at rather more than twice the rate of the outside cylinders. This, when working compound, is, in fact, equivalent to a cylinder ratio of 2·08.

The grate area is 1·4 sq. m. (15·06 sq. ft.), the heating surface is 94 sq. m. (1011 sq. ft.), and the working pressure is 12 atmos. (176·4 lbs.) per square inch.

The engine, which weighs 27·6 tons empty, carries 1 ton of coal, 3 tons of water in the boiler and the same in the tank, and has a total weight in working order of 34·6 tons.

At low speeds, and under favourable conditions as to weather, the engine can easily haul 90 tons, including its own weight, on the steepest grade.

CYLINDERS AND STEAM-CHESTS.

As before remarked, outside cylinders are almost universal in Germany, Austria, and Italy. Inside cylinders are not frequent in France, only the Northern and Western Railways employing them in express engines.

The position of the valve chest—as in this country—varies considerably in different designs of engines, being sometimes above, sometimes between, and sometimes below the cylinders. Perhaps the most common position is on top, and inclined towards the driving-axle.

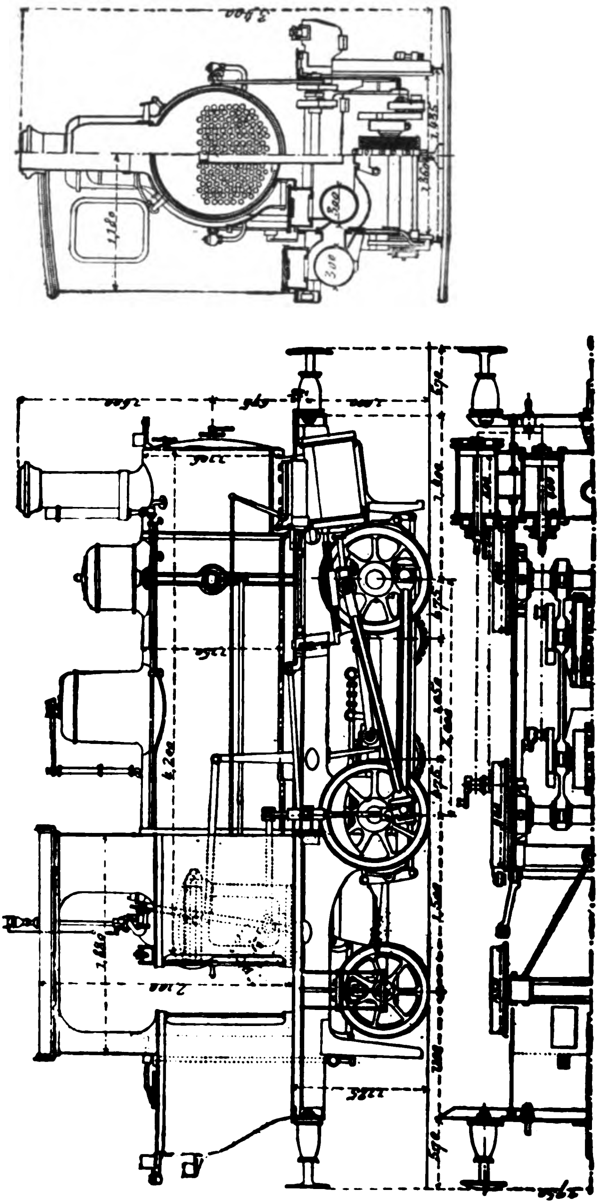

Fig. 269.—Rack and Adhesion Locomotive.

In fig. 270 another very common disposition of the valve chests is seen, differing notably from British practice. In this, the cylinders are inside, but the valve faces and steam-chest are inclined outwardly. In most cases the position is determined mainly with a view to accessibility.

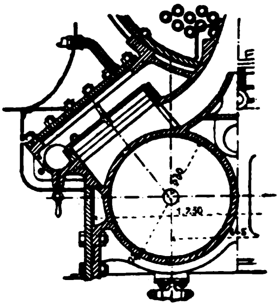

Fig. 270.—Inside Cylinder, showing disposition of Valve Chest.

VALVES AND VALVE GEAR.

Slide Valve Gears.—The Stephenson, Allan, Gooch, and Walschaert (or Heusinger) gears are all largely employed. When outside—which is the commonest disposition—the requisite eccentric or eccentrics are mounted on a return crank. The links employed are generally of the box type.

The Walschaert gear has been described on p. 161. A modification of this, in which no eccentric or return crank is used, is shown in fig. 271. This is employed in certain engines on the Western Railway of France. The valve is worked by a floating lever as before; but the link is rocked in this form of the gear from the connecting-rod by means of an arm jointed to a link resembling that made use of in Joy's gear. This affords the variable component of the movement of the valve—which determines the direction of motion and the grade of expansion—while the invariable, or lap and lead component, is derived from the crosshead, as in the original Walschaert gear.

Corliss Valves and Gear.—A number of locomotives with separate admission and exhaust valves of the Corliss type at each end of the cylinder have, for some years, been running with good results on the Paris and Orleans and other Railways. The valve gear employed in these locomotives is shown in side elevation in fig. 272, in which figure are also seen part longitudinal sections through the cylinder showing respectively the admission and exhaust valves, and a transverse section of the cylinder passing through the axis of the pair of valves at one end. The upper are the admission valves, and the lower are the exhaust valves. Arms or cranks on the valve spindles of the admission valves are connected by a horizontal bar, A, so that they move together, and, in like manner, the exhaust valves are connected by a bar, A^1. Both sets of valves are double ported to ensure rapid action, and are so disposed as to be closed when the bars, A, A^1, are in the middle of their horizontal travel. Displacement of these bars in either direction opens the valve at one end of the cylinder and closes that at the other.

The admission valves are worked by a variable expansion and reversing link motion of the Gooch type, the bar, A, being con-

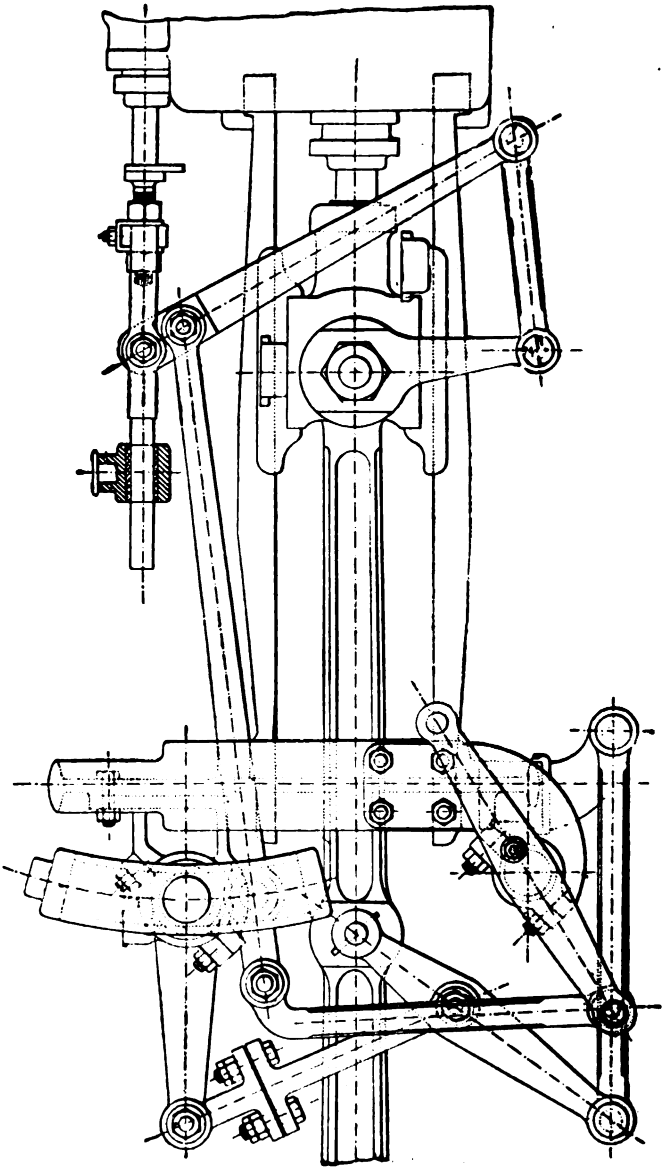

Fig. 271.—Modified Walschaert Gear.

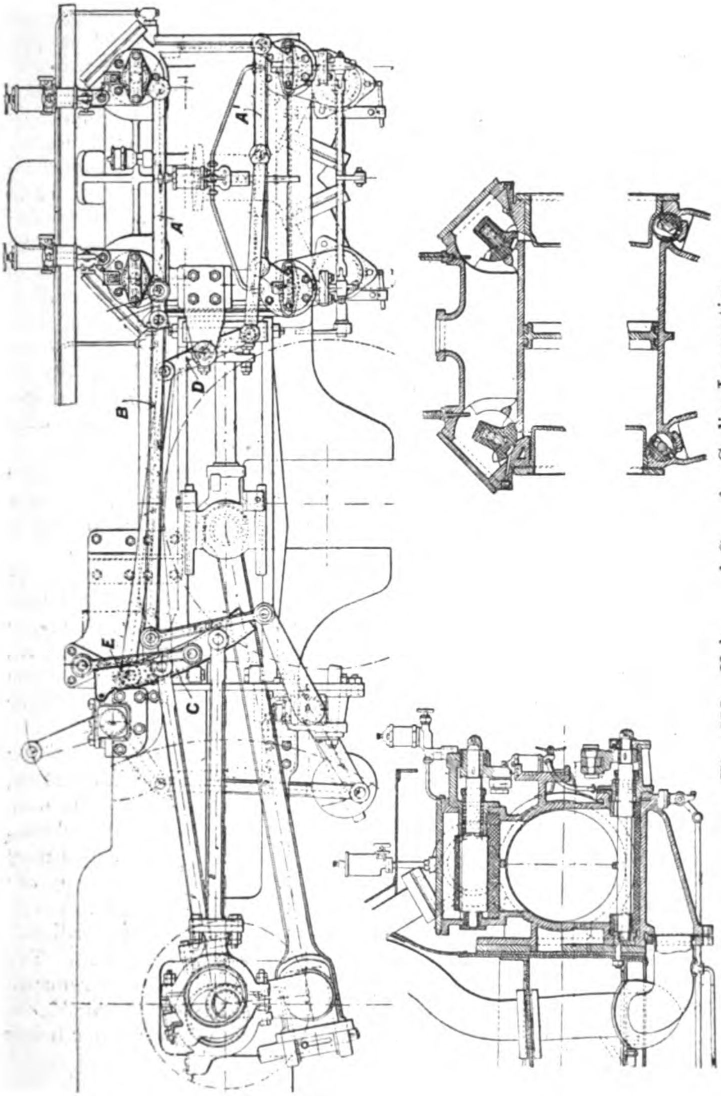

Fig. 272.—Valves and Gear for Corliss Locomotive.

nected by the adjustable rod, B, to the block in the swinging link, C. The whole of the motion is outside, and the eccentrics of the link motion are carried by a return crank.

The exhaust valves are operated, with a movement not capable of being varied, through the rocking lever, D, from a fixed point, E, at the upper end of the link, C. The usual adjustment of the block in the link, for the purpose of regulating the grade of expansion or for reversing, affects only the admission valves. The release of the exhaust and the beginning of compression are, therefore, not changed by altering the grade of expansion. This is a very considerable advantage in favour of this gear as compared with any simple slide valve gear; since in the latter the earlier the point of cut-off the earlier compression begins, with the result that high grades of expansion are almost always accompanied by excessive compression.

The leading advantage is, however, the reduction of initial condensation that ensues upon the separation of the admission valve from the exhaust. The temperature of the exhaust is about 230° F., while that of the steam-chest is about 356° F. Thus, where a single valve is employed, a certain amount of condensation must take place, which is avoided when separate valves are used.

The exhaust valves, being at the bottom, also serve to drain the cylinder. Double-ported Corliss valves are, moreover, practically balanced, and also give the rapid opening of the Trick or Allan valve.

One of these engines, after running over 40,000 miles, was, in 1892, taken into the Paris workshops for overhauling. All that was found necessary in the mechanism of the new gear was to tighten the valve arms or cranks on their square seats. The valves and other portions of the gear were in such good condition that the engine was able to be returned from the shops without further repair.

A careful comparison was made between the performances of one of these locomotives and another one with ordinary slide valves, but otherwise exactly similar in all respects to the Corliss locomotive. The observations were made between Paris and Orleans, each engine taking twenty-four trains each way under ordinary working conditions. The nett result was to show that in the Corliss locomotive the consumption of steam per draw-bar horse-power was 11·19 per cent. less than in the engine with ordinary valves; and that the coal consumption was 6·3 per cent. less. The difference between these two percentages—showing a difference in boiler efficiency in favour of the ordinary engine—was considered to be due to the presence of more incrustation in the former boiler than in the latter.

AXLE-BOXES.

A form of axle-box, especially for locomotive driving-axles, is shown in fig. 273. In this system of construction—known by the name of Raymond and Henrard—three brasses are employed in order to enable the horizontal thrusts due to the driving forces to be the better resisted. The upper brass, A, which always rests on

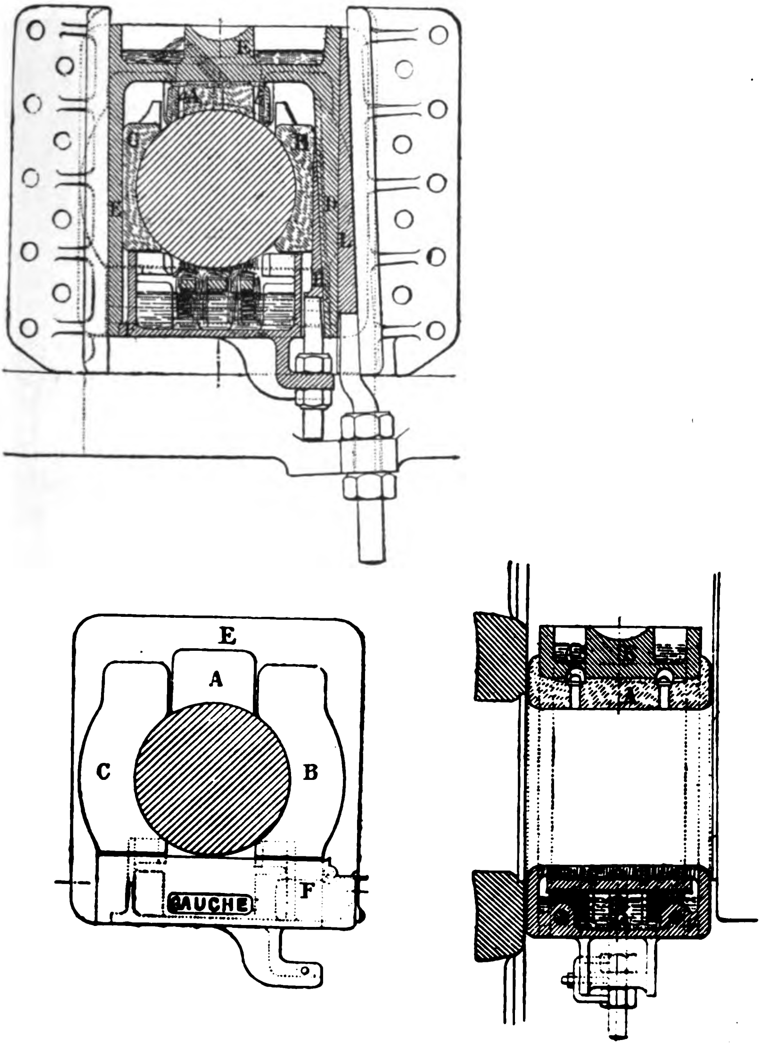

Fig. 273.—Raymond and Henrard Axle-box.

the journal, has oil grooves in its face; the side brasses, B, C, have none. They are capable of being adjusted by an inner wedge, F. This is first forced home, and is then withdrawn a few millimetres; the very slight play thus allowed to the side brasses permitting the lubricant to enter between them and the axle.

BOGIES.

Several forms of bogies are employed on the Continent, resembling those in use in this country. But a form of bogie, shown in figs. 274 and 275, differing in important respects from any employed here, has been adopted on the Paris, Lyons, and Mediterranean Railway. In this, the bogie is caused to resume its central position, not by the action of springs, but by gravity. The bogie pin has a spherical end, and rests in a spherical socket, which permits the bogie to incline slightly to the right or left if the rails are not quite level. The socket is caused to turn about a vertical axis relatively

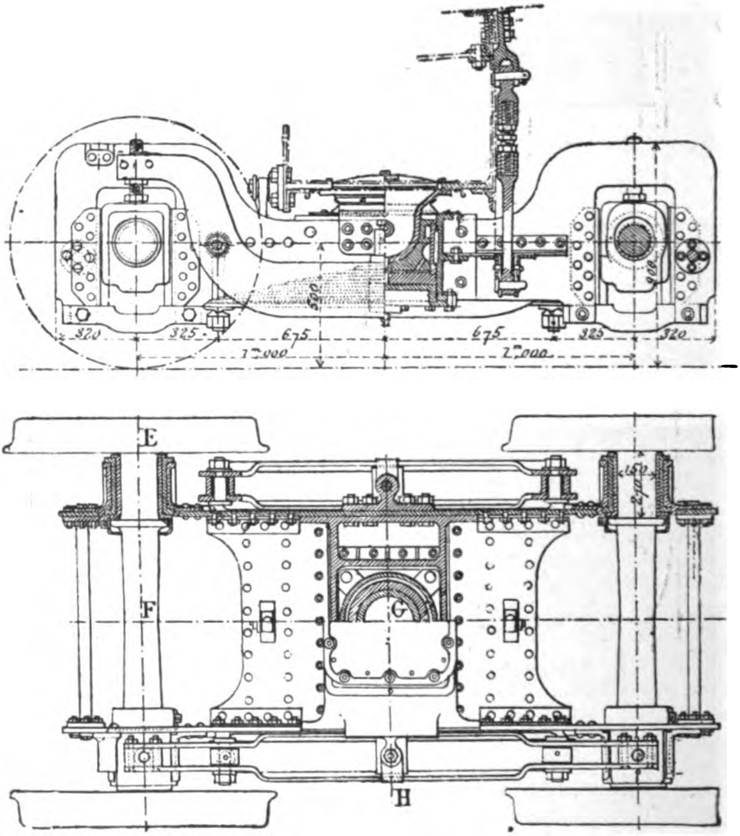

Fig. 274.—Bogie of Paris, Lyons, and Mediterranean Railway.

with an air grid, and just within is a deflector for directing the air towards the sides of the firebox. Air inlet holes are also made on each side near the lower part of the firebox for admitting air above the fuel.

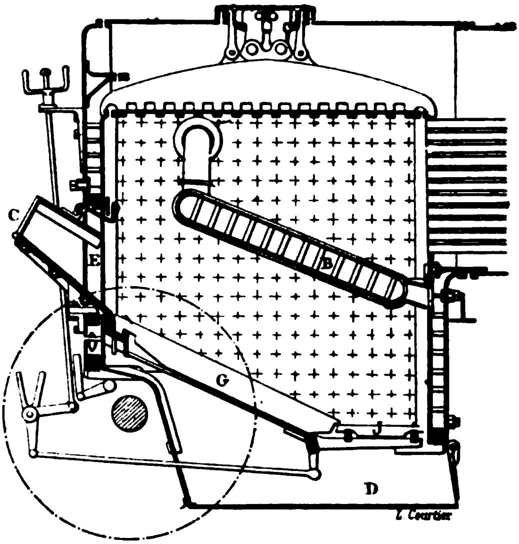

Fig. 276.—Tenbrink Firebox.

Flamant Boiler.—This form of boiler, previously described on p. 224, is employed principally on the Eastern Railway of France. In the locomotive shown in fig. 251 is seen the boiler in side elevation. The object aimed at is the attainment of greater boiler power by an enlargement of the heating surface, without increasing greatly the boiler dimensions. To this end, the barrel is entirely filled with tubes, and is surmounted by a horizontal steam collecting drum extending the whole length of the boiler. At the same time, the external firebox is extended vertically, so as to form a large steam space, with which the steam drum communicates at the back end. The steam drum communicates with the barrel by pipe connections at several points in its length.

Tubes.—In addition to plain or smooth tubes, like those employed in this country, a form of internally ribbed or winged tubes —known as the Serve tube—is largely employed in France. The surface of the ribs constitutes a large addition to the surface of metal in contact with the hot gases, and results in a readier absorption of heat therefrom.

An elaborate series of experiments was carried out in 1885-1890 by M. Henry on the Paris, Lyons, and Mediterranean Railway, in which the first object was to ascertain the most advantageous roof, instead of being made from a single flat sheet, is composed of a series of plates bent saddle-wise to a trough-like section in one direction, and to an arch-like form in a direction at right angles to this. The vertical flanges of the troughs in the adjacent sections are rivetted together, and practically constitute a series of transverse girders of sufficient strength to sustain the firebox roof against the pressure to which it is subjected. This construction of firebox is found in certain Austrian locomotives, and in some of the engines of the Paris and Orleans Railway.

Borck Firebox.—A form of firebox has been tried in Germany in which a brick lining to the firebox shell is substituted for the internal firebox and surrounding water-space, and the end of the barrel is entirely closed by the tube-plate. This construction, in respect to efficiency and durability, has given satisfactory results. The principal object aimed at is to dispense with the costly system of staying entailed by the normal construction of firebox.

Steam Branch Fitting.—In order to reduce the number of holes made in the boiler plates, a single steam fitting with a number of steam branches is mounted at the back of the boiler inside the cab in many of the locomotives of the Western Railway of France. This is shown in fig. 277, and has, in addition to its main purpose,

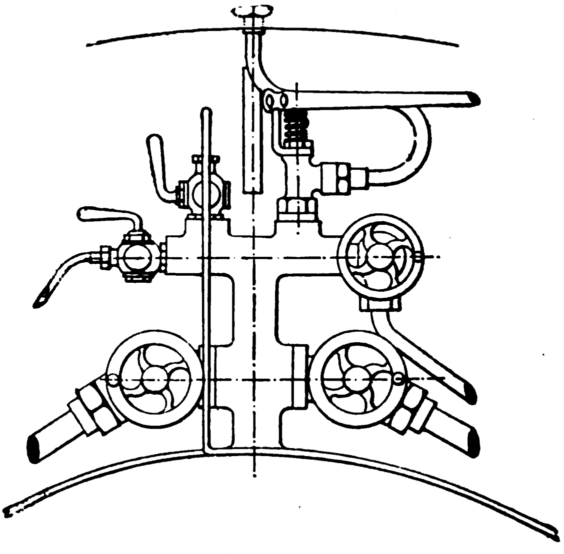

Fig. 277.—Steam Branch Fitting.

the advantage of bringing all the handles conveniently together. This fitting has branches for the steam pipes to the injectors, the brake air-compressor, the steam blower, the Gresham sand-ejector, and the pressure gauge.

locomotives of the Western Railway of France, and certain German and Belgian engines, also have extended smokeboxes. A hopper closed by a valve is provided in front of the cylinders for the withdrawal of cinders. The chimneys of French locomotives often have a screen extending slightly above the top at the front, for preventing the wind from interfering with the draught; and they are often fitted with a damper plate. These features are clearly shown in fig. 279. Belgian engines commonly have square chimneys. The object is to enlarge the area as much as possible, and to soften the draught, on account of the character of the fuel available.

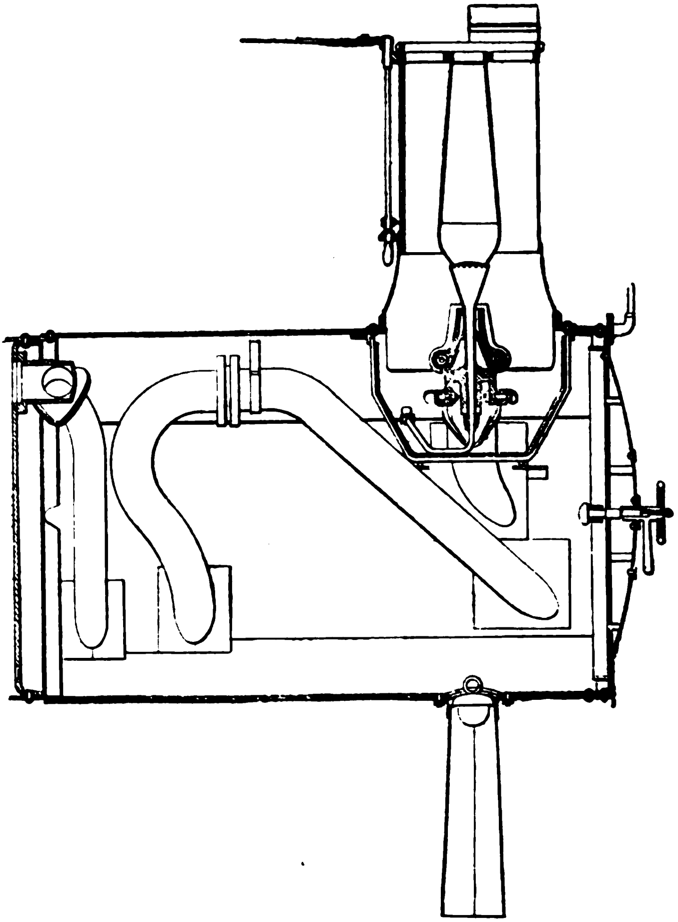

Fig. 279.—Front Extension Smokebox.

COUPLING ENGINE AND TENDER.

A method of coupling the engine and tender without the use of elastic buffers is employed on the Western Railway of France. This is known as Roy's system of oblique buffers. This mode of

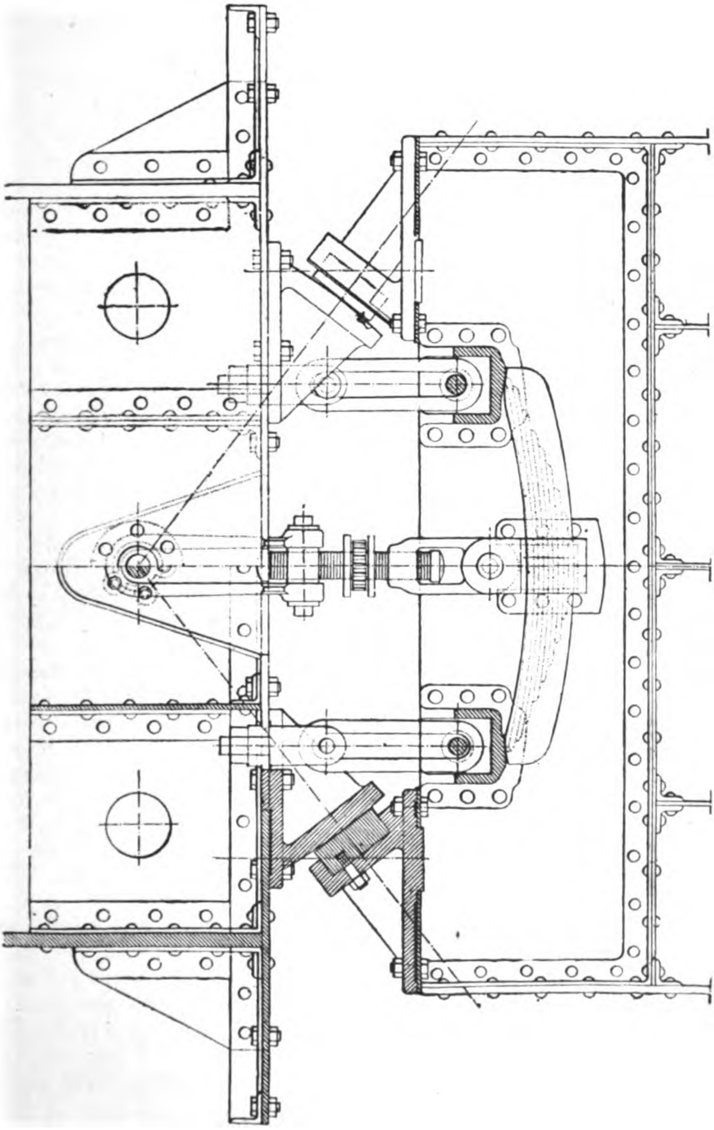

Fig. 280.—Roy's Oblique Buffers.

connection is seen in plan in fig. 280. The "buffers" on the engine have spherical ends; those on the tender are flat and inclined at about 50°. This prevents lateral movement between the engine and tender, but does not hinder the requisite relative movement in passing round curves.

BRAKES.

Wenger Brake.—The automatic brakes employed are commonly of the compressed-air type. Among these the Wenger brake is worthy of mention. This brake is especially designed to enable a prolonged, but moderate, application of the brakes to be maintained during the descent of long inclines. In principle, it is analogous to the Westinghouse brake. The piston-rod in the brake cylinder carries, in addition to the main piston, a small auxiliary piston working in a cylinder projecting inwardly from the front cover. When the pressures on opposite sides of the main piston are equal, the pressure on the small piston thrusts out the piston-rod and releases and holds off the brakes. The main piston is packed by a cup-leather, which permits air to leak from the back of the piston to the front, but prevents it from passing in the reverse direction. The application of the brakes is controlled by regulating the pressure behind the main piston. As this pressure is reduced the piston-rod is withdrawn, and the brakes are thereby applied, with a force dependent on the preponderance of the pressure on the front of the main piston over the joint pressures behind the main piston and on the auxiliary piston.

The partial relief of pressure behind the piston is effected through the medium of a solid slide valve attached to, and adjusted by, a small piston working in a chamber at the side of the brake cylinder and fitted with a leather packing acting like that of the main piston. A spring acts on the valve so as to keep the escape orifice closed as long as the pressure in the brake pipe is equal to that in the brake cylinder. But if air is allowed to escape from the brake pipe, the air enclosed in the back end of the brake cylinder, acting on the small valve piston, pushes it over so as to cause the slide valve to uncover the escape orifice more or less completely, with the result that a reduction of pressure in the back of the brake cylinder at once ensues. The consequence of this, as we have seen, is a more or less forcible application of the brakes, which may be maintained as long as desired.

Counter-pressure Brake.—A method of arresting the motion of trains, formerly much used on the Continent, consists in reversing the valve gear while leaving the regulator open. The effect of this is to cause the steam to oppose the movements which the pistons are constrained to perform owing to the adhesion of the wheels. It is in the descent of long inclines that this method of braking the train finds its most useful application; superseding, with great advantage, a prolonged use of the hand brakes.

CHAPTER XXII.

REPAIRS, RUNNING, INSPECTION, AND RENEWALS.

CONTENTS.—Taking Over Engines from Shops—Lighting Up, Running, and Returning to Shed—Failures and Breakdowns on Road—Periodical Inspection and Repairs—Life of Boilers, Wheels, and Axles—Mileage and Cost of Repairs and Renewals.

Taking Over Engines from Shops.—When a locomotive is built at the Railway Company's Works, or delivered by the locomotive builders, it is necessary carefully to get up steam, and run a trial trip for a distance of about fifty miles. If all the bearings run cool and no joints are leaking, the engine is then put to work. For a few days the engine, if for goods traffic, is run on slow goods trains; and if for passenger traffic, is run on slow passenger trains. When an engine is supplied by a firm of locomotive builders, it is usually specified that the engine will be required to run 1000 miles without showing any defect in material or workmanship; and that the builders will be held responsible for defects which may present themselves (accidents alone excepted) until it has run the distance named. The engine is then put to regular work.

Lighting Up, Running, and Returning to Shed.—Before lighting the fire, notice should be taken that the proper quantity of water is in the boiler, that the brick-arch and fire-bars are in good condition, that the regulator is properly closed, and that the reversing lever is in mid-gear. The fire should be started slowly, as the boiler undergoes the greatest strains when steam is being raised and the boiler expands; and when cooling down and the boiler contracts; on each occasion the tubes, stays, &c., are very much strained.

The engine-driver and fireman must be with their engine at such time previous to the starting of the train as may be required; this is generally about thirty minutes, to enable them to oil all the bearings and motion, fill all lubricators, and examine the engine thoroughly; they must satisfy themselves that the engine is in proper order. On the engine there must be a complete set of lamps, a box with not fewer than twelve detonators, two red flags, a fire bucket, and the necessary spanners, hammers, tools, &c.

Before leaving the running shed the cylinder cocks should be opened, so that the condensed water in the cylinders may escape. It should be seen that the tank is filled with water, the sand-

On returning to the engine-shed and before leaving the engine the driver should carefully look round and examine axle-boxes and all bearings to see if they have been running cool, see that all the steam pipe joints are tight, examine firebox and tubes, tyres, axles, springs, and motion. Should he find anything wrong it must be entered in the repair book provided for that

ENGINE-DRIVER'S

No...*Engine.*

....*Driver.* ....*Station.*

From	To	Trains in Service Book.		Time Table.						
				Time of		Ordinary.			Special.	
		Page.	No.	Dept.	Arrival.	Passr.	Goods.	Empty Carriages.	Passr.	Goods.

Failures and Breakdowns on Road.—The engines that receive careful attention will run longest between repairs and cost less for maintenance. In looking through the repair sheets it can be seen that some drivers are continually reporting defects, while others have seldom any to report. At the same time, should a failure or accident occur on the road, it is necessary that the engine-driver should be so trained, that he should know what to do either to prevent a serious accident, or to take his train to the next station. All failures must be dealt with carefully and left to the judgment of the driver, whose experience should teach him best what should be done.

Should a tube leak causing a blow into the firebox, and the position of the tube is such that it can be plugged, this should be done by means of an iron plug, some of which are always carried on the engine. If an axle should break, or fail, the train should not be stopped suddenly, but gradually; if possible, it should be run to the next station. The two wheels should be bolted together by long bolts, and the weight taken off the defective axle by a piece of iron being placed between the hornstay and the underside of the axle-box.

Should a coupling-rod fail, on a four-coupled engine, the rods on both sides will have to be removed; and should the engine have outside-cylinders, bushes (which should always be carried on the full forward gear; and to prevent delay to traffic the engine might be worked to the next station. It is always necessary that proper tools be at hand and ready for use whenever needed, as one should be prepared for a breakdown.

Examination of Engine by Driver.—It might be said that failures should not occur, but unfortunately they do. At the same time, for every failure there is a cause; and, no doubt, more than half of them could be averted. To minimise them as much as possible the engine-driver should examine all running gear as carefully as he can. Commencing at the front of the engine and proceeding along each side, all nuts. cotters, set screws, and split pins should be examined, and care be taken to see if any are missing; the piston and spindle glands, whether metallic or other packing, should work freely and not be screwed up too tightly; the play between the slide bars and crosshead should be tried, and notice taken if any seizing has commenced; a good surface must be maintained for smooth working. The small and big ends must also be examined for side play and knocking; a blow can be felt at either end by placing the cranks vertically, either above or below, and then applying steam to the opposite sides of the piston, and if this occurs must be immediately booked for taking up. A certain amount of play is necessary for coupling-rods, bushes, or brasses on the crank pins. If they are too loose a rattle is soon set up, and can be easily heard. Axle-boxes may also knock each time the crank comes to a dead centre. This can be adjusted, if the engine has hornblocks fitted with wedges. If the wheel is loose on its axle, oil can be seen working through after each run. Tyres should be carefully examined for a flaw, and should be struck with a hammer, when a difference in sound can be detected if a flaw be present. Notice should also be taken of the sharpness of the flange of the tyres. All springs and spring gear should be carefully tapped with a hammer and examined for broken plates or flaws.

When oiling the different parts of the valve motion the eccentric straps, pulleys, and bolts should be examined for flaws, and the amount of play, or for any seizing that has taken place. The smokebox and dampers should always fit tight and not show signs of drawing air, which will prevent the proper steaming of the engine, and is apparent by the heating caused. Both injectors should be tried each day, as either one may fail when the remaining one would require to be used. The continuous brake details must be carefully examined and tried at the end of each day's work, and notice taken that all the brake blocks are carefully adjusted. All joints of steam and other pipes should be noticed for blowing.

Periodical Inspection and Repairs.—In addition to the examination of the engine by the engine-driver, both before and after each run, there are certain parts that should receive periodical inspection at the hands of experienced mechanics. The firebox should be thoroughly examined at least every three months for cracked, grooved, or thin plates, special attention being given to broken copper stays and thickness of tubes. The inspector at the same time should examine the smokebox, ashpan, rivets in the frames and the boiler generally. The piston and slide valves should be taken out and examined every three or six months for thickness of packing rings or thickness of valve; coupling-rods should also be examined on the underside periodically for any flaw. Whenever a connecting-rod big end is taken off, or an axle-box is being re-fitted, the axles and crank pins should be carefully examined for flaws. The different parts of the brake, whether Westinghouse or automatic vacuum, should also be periodically examined. All the examinations should be entered in books provided for the purpose. If a proper system of periodical inspection is made, many failures on the road will be obviated.

After the engine has been running a certain period or a number of miles, which vary with the work done, the nature of the road, and traffic (and may be eighteen months or two years, 70,000 or 100,000 miles), it will require to be sent to the shops for repairs. A report of repairs required similar to that on the preceding page is also sent, signed by the driver and the running foreman.

When the engine arrives in the erecting shop the first thing is to have it stripped, the wheels taken out, all the motion taken down if necessary, and the different details distributed to the various fitting, wheel, smith, coppersmith, &c., shops for repairs. The boiler will not require to be taken off unless heavy repairs, such as new firebox, &c., are required. Should the boiler be re-tubed or undergo heavy repairs, it should be re-tested, and regulations similar to those given on pages 223 and 224 are required for testing.

In addition to the repairs reported by the engine-driver and the running foreman, the foreman of the erecting shop and the erector must carefully examine all parts, and thoroughly repair all required, and at the completion the erector's report of repairs, similar to the following, should be filled up and registered :—

OF REPAIRS.

LOCOMOTIVE DEPARTMENT.

done to................*Engine.* *Date sent out of Shops,*............................*189*.....

Engine Detail.	Particulars of Repairs.	Engine Detail.	Particulars of Repairs.
Spring gear, adjusting screws,		Boiler safety valves,	
,, adjusting nuts,		,, ,, ,, levers,	
,, centre hangers,		,, ,, ,, springs,	
Bogie springs,		,, whistles,	
,, side check springs,		Wood lagging,	
,, cross stays,		Steel lagging plates,	
Springs, leading,		Steam pipes,	
,, driving,		Smokebox,	
,, trailing,		Exhaust pipe,	
,, radial,		Regulator valve,	
Brake cylinder,		,, spindle,	
,, piston,		,, rod,	
,, shaft,		,, handle,	
,, brackets,		,, stuffing-box,	
,, hangers,		,, gland,	
,, blocks,		Ejector,	
,, bolts,		,, steam cock,	
,, pins,		Steam brake valve,	
,, spring,		Vacuum exhaust pipe,	
,, rods,		,, train pipe,	
,, lever,		,, hose pipe,	
,, nut and screw,		Injectors,	
,, column,		,, feed cocks,	
Buffer beams,		,, steam valves,	
Draw hooks,		,, ,, pipes,	
Centre couplings,		,, feed pipes,	
Side links,		,, delivery pipes,	
,, chains,		,, waste pipes,	
Smokebox front,		Lubricators,	
,, door,		,, pipes,	
,, fittings,		Gauge cocks,	
Engine frame,		Tyres,	
,, cross stays,		,, leading,	
,, horn stays,		,, driving,	
,, blocks and wedges,		,, trailing,	
Sand-box gear,		,, L. bogie,	
Boiler,		,, T. bogie,	
,, mountings,		,, radial,	
		Paint,	
		Sundries,	

Diameter of Exhaust Pipe.	Diameter of Chimney.	Thickness of Tyres.					
		L.	D.	T.	L.B.	T.B.	R.

Date of Trial,..
Signature of Leading Erector,..........................
,, *Foreman,*......................................

say, 50,000 miles; and on another line twelve or fifteen years and run 200,000 miles. Careful records should be kept of the dates and conditions of all crank and straight axles, and tyres; also of all wheels and axles changed from one engine to another. For this purpose the book and forms similar to the following are kept:—

WHEELS AND AXLES PUT UNDER ENGINES AND TENDERS.

Axles.					Examined and found sound in every respect, by	Remarks.
Length and Dia. of Journal.	**Dia. at Centre.**	**Maker's Name.**	**Date.**	**Straight or Crank.**		

LOCOMOTIVE DEPARTMENT.

AXLES CONDEMNED.

Week ending..................................*189*......

Date.	Nos. on Wheels.	No. of Tender or Engine.	Description of Axle.	Material and Name of Maker.	Date of Manufacture.	Particulars of Defect, &c.

Signature,..................................

From these particulars the life and mileage can always be easily obtained. Crank and straight axles may run less than 100,000 miles or over 600,000 miles. The mileage of tyres also varies very much.

The following are the average mileages of tyres running under different classes of engines on an English railway:—

The average mileage of ten sets of four wheels coupled bogie express engine tyres:—

TABLE XXI.—MILEAGE OF EXPRESS ENGINE TYRES.

	Bogie (2 pairs of wheels).	Driving.	Trailing.
Mileage, ...	287,560	473,150	473,150
Loaded weight on wheels, .	T. C. Q. 17 13 0	T. C. Q. 14 9 0	T. C. Q. 14 6 0
Diameter of wheels on tread,	Ft. Ins. 3 4	Ft. Ins. 6 7	Ft. Ins. 6 7

The average mileage of ten sets of six wheels coupled goods engine tyres:—

TABLE XXII.—MILEAGE OF GOODS ENGINE TYRES.

	Leading.	Driving.	Trailing.
Mileage, ...	223,170	223,170	223,170
Loaded weight on wheels, .	T. C. Q. 13 4 3	T. C. Q. 13 5 0	T. C. Q. 12 0 2
Diameter of wheels on tread,	Ft. Ins. 4 6	Ft. Ins. 4 6	Ft. Ins. 4 6

In all cases of repairs the design of the engine must always be taken into careful consideration.

Mileage and Cost of Repairs and Renewals.—The following is a table containing particulars for the half-year ending December 31st, 1897, and June 30th, 1898, of the repairs and renewals to the engines of some of the principal railway companies. The renewals on most of the railways include a certain number of new engines built to revenue account to replace old engines:—

TABLE XXIV.—COST OF REPAIRS AND RENEWALS FOR THE HALF-YEAR ENDING JUNE 30, 1898.

	London and N.-Western.	Midland.	Gt. Western.	North Eastern.	Gt. Northern.	Gt. Eastern.
Mileage—Passenger,	11,728,450	8,613,357	10,441,879	6,501,442	5,463,000	6,321,800
,, Goods,	10,728,587	13,323,032	9,951,829	8,180,920	5,900,667	4,004,145
,, Total,	22,457,037	21,936,389	20,393,708	14,682,362	11,364,576	10,325,945
Number of engines,	2,385	2,360	1,863	1,963	1,069	993
Total miles per engine,	9,415	9,295	10,946	7,479	10,631	10,398
Cost of repairs and renewals—						
Wages,	£107,916	£138,553	£139,655	£127,644	...	£75,373
Materials,	118,849	107,737	108,431	101,531	...	32,511
Total,	£226,765	£246,290	£248,086	£229,175	£105,129	£107,884
Cost per train mile, d.	2·42	2·69	2·919	3·74	2·22	2·5

	Lancashire and Yorkshire.	London and S.-Western.	Gt. Central.	Furness.	Caledonian.	Gt. Southern and Western.
Mileage—Passenger,	5,594,697	5,920,224	3,016,938	299,998	4,701,054	1,121,621
,, Goods,	3,216,837	2,232,822	4,144,860	363,624	3,656,332	743,381
,, Total,	8,811,534	8,153,016	7,161,798	663,622	8,357,386	1,865,002
Number of engines,	1,256	702	775	124	788	178
Total miles per engine,	7,015	11,613	9,241	5,351	10,605	10,477
Cost of repairs and renewals—						
Wages,	£43,686	£35,094	£56,710	£3,065	£33,731	£9,766
Materials,	24,072 Renewals. 25,000	23,136	57,188	994 Renewals. 4,490	44,778	8,838
Total,	£92,758	£58,230	£113,898	£8,550	£78,509	£18,604
Cost per train mile, d.	2·5	1·7	3·8	3·09	2·24	2·3

Boiler Plates.—The barrel, smokebox, tube plate, firebox casing, and throat and back plates of firebox, also all dome plates and butt strips, to be made of the best mild steel of the exact dimensions, both as regards form and thickness as given on the drawings. To be supplied by makers approved by the Railway Company's Locomotive Superintendent.

Quality.—The quality of the material to be that generally known as mild steel plate, and to be free from silicon, sulphur, or phosphorus. The ultimate tensile strain that the plates will stand to be not less than 25 nor more than 30 tons per square inch, and to have an extension of not less than 23 per cent. in 10 inches. Every plate to be tested.

Manufacture.—All plates to be made in the most approved manner from ingots hammered on all sides, and, when re-heated, to be rolled truly to an uniform thickness. Both sides to be perfectly clean and free from pitting, roll marks, scale, dirt, overlapping, or other defects. Each plate to be taken from the rolls at a full red heat, and allowed to cool gradually on a flat surface. Each plate is to be sheared to the dimensions given, and in no case to be sent out before being levelled sufficiently true for machining. All plates that are wavy or buckled, or in any way defective, will be rejected, and must be replaced by the makers free of cost. The maker's name and date of manufacture must be legibly stamped on every plate, and not nearer the edges than 9 inches.

A sample or test plate 2 feet square must be sent in by the contractor as a sample of what will be supplied in the plates to be made under this contract, together with a complete analysis of the same. This test plate is to be ½ inch in thickness, and from it pieces will be taken for proving in the following manner.

Test.—A piece 6 in. long will be bent over cold until the ends meet each other closely, and no fracture or sign of failure is to be observable in the heel of the bend. Pieces 3 ins. wide will also be taken, and a ⅝-in. hole punched through same, which shall stand being drifted cold by taper drifts until it reaches 1¼ ins. in diameter without the edges fraying or showing signs of fracture.

Samples or shearings from the plates must be tested in the presence of the Railway Company's Locomotive Superintendent or his Inspector on the premises of the maker whenever desired.

The barrel and firebox casing, throat, back, and smokebox tube plates to be thoroughly annealed after they have been both flanged and punched.

Boiler Barrel.—The boiler barrel is to be cylindrical and butt-jointed, and is to be made in all respects as shown on drawings. It is to be 11 feet long between the smokebox tube plate, and the throat plate of the firebox shell; 4 ft. 4 ins. outside diameter, and composed of ½-in. plates. The longitudinal joints are to have inner and outer covering strips double rivetted, the rivets being placed zig-zag. The transverse joint to have an exterior steel weldless ring double rivetted. The ring to be turned inside to gauge, and to the exact diameter necessary, and then shrunk on. All studs and fittings are to be fixed before the boiler is tested.

Smokebox Tube Plate.—The smokebox tube plate is to be ¾ in. thick, the tops and sides of the plate being flanged 2¼ ins., forming a flange for the smokebox, and is to be secured to the boiler barrel by a solid rolled weldless steel angle ring, well annealed, and supplied by makers to be approved by the Railway Company's Locomotive Superintendent. The ring must be faced, bored, and turned on the edges, and then shrunk on the boiler barrel, and is to be double rivetted to the same, the rivets being placed zig-zag. The tube plate is to be faced where it is joined to the boiler steel angle ring. Eight wash-out plugs are to be inserted in the plate as shown on drawing.

Firebox Casing.—The firebox casing is to be 6 ft. 10. ins. long and 3 ft. 10½ ins. wide outside at the bottom, and to be 5 ft. below the centre line of the boiler. The top and sides are to be in one plate ½ inch thick. The back plate to be 9/16 inch thick, and flanged over to join the wrapper plate. The front or throat plate is to be 9/16 inch thick, and flanged over to join the barrel.

All rivetted joints in firebox casing to be double rivetted. The expansion brackets are to be rivetted to the sides of the firebox shell. The holes in firebox casing for copper stays are to be drilled and then tapped to form a good thread.

Rivetting.—All rivet holes to be punched or drilled ⅞ inch in diameter. All rivets to be of the best Yorkshire iron, with a breaking strength of not less than 22 tons per square inch, and an extension of not less than 30 per cent. in 2 inches. Rivets to be 13/16 inch in diameter before being closed, and to be closed where possible by a hydraulic pressure of at least 30 tons, so that they properly fill the rivet holes. The holes in the plates to be slightly countersunk under the rivet heads, and so punched that when the plates are in proper position for rivetting, the smaller dimensions of the holes shall be together at the centre of the joint. All holes in the various plates and angle irons must be perfectly fair with one another, and must not be drifted in any case; should any of the holes not be perfectly fair, they must be rimered out until they become so, and every hole must be completely filled by the rivet. The holes in the angle irons must be marked from the plates and drilled (not punched), the pitch of rivets and lap of joints being in all cases as shown on drawing. Great care must be taken that the plates are brought well together before any rivets are put in. The edges of all the plates are to be planed before being put together. Any caulking which may be required must be done with a broadfaced tool, care being taken that the plates are not injured by so doing.

Copper Firebox Plates.—The copper plates to be of the very best quality manufactured, and to be supplied by makers approved by the Railway Company's Locomotive Superintendent, of the exact dimensions, both as regards form and thickness, as given on the drawings.

The copper plates to be properly annealed, and a piece taken from each plate must stand the following tests, viz.:—

The ultimate tensile strain to be not less than 14 tons per square inch, with an elongation of not less than 40 per cent. in 2 ins. A piece 6 ins. long is also to be bent double when cold, without showing signs of fracture at the heel of the bend.

Tests to be made in the presence of the Locomotive Superintendent of the Company or his Inspector.

Inside Firebox.—The inside firebox is to be of copper, 5 ft. 11 3/16 ins. long inside at the top, and 6 ft. 1⅞ ins. long inside at the bottom; the height inside at the middle of the box is to be 5 ft. 9½ ins., the width inside at the top, 3 ft. 6 ins., and at the bottom, 3 ft. 2½ ins. The tube plate is to be 1 in. thick where the tubes and barrel-stays pass through it; the remaining portion is to be reduced by hammering to ½ in. thick, and is to be flanged back to join the covering plate. The back plate, which must be ½ in. thick, is to be flanged forward. The sides and top are to be in one plate, and ½ in. thick; the joints are to have 2½ ins. lap when finished, and to be single rivetted with ¾ in. iron rivets, same quality as used for boiler. All the joints in the copper firebox are to be hand-rivetted. Two fusible plugs are to be fixed in the crown of the firebox.

Fire-hole Door.—The ring for the fire door is to be of the best Yorkshire iron, and is to be circular, and of the dimensions shown on drawing. The ring is to be rivetted to the firebox by ⅞-in. rivets, and is to project ½ in. beyond the edges of the plates, which must be well caulked. The fire door is to be of cast iron, formed in two halves, and made to slide as shown on drawing. A wrought-iron deflecting plate is to be fixed in the fire-door hole as shown. Also a brick arch in the firebox as shown.

Stays.—The outside and inside fireboxes are to be stayed together on all sides with copper or bronze stays 1 in. in diameter and 12 threads per inch, if of copper, made from best soft rolled bars, having a breaking strength of not less than 14 tons per square inch, with an extension of not less than 40 per cent. in 2 ins., properly annealed, screwed steam-tight into both copper and steel plates, and afterwards rivetted over. Great care must be taken in cutting off the ends of the stays. so as not to injure the threads. The pitch of the stays to be about 3½ ins. centre to centre as shown. Great care must be taken that the holes in the outside and inside boxes are exactly opposite one another. The barrel stays are to be rivetted to the boiler with ¾-in. rivets and secured to the tube plate as shown in the drawing. The inner copper firebox is to have eight roof stay-bars of cast steel of approved make of the section shown, and secured to it by bolts which are tapped into the stays only, as shown on the drawing. The stays are to bear on the top, back, and front plates, and are to be slung where shown to the outer shell. The back plate of the firebox casing and the smokebox tube plate are to be stayed together with 11 wrought-iron longitudinal stays 1½ ins. in diameter where they pass through the back plate, and 1¼ ins. in diameter for the remainder of their length; these stays are to have the head bedding on a copper washer, and screwed into the firebox plate; at the other end they are to be secured by a nut bedding on a copper washer on each side of the plate.

Tubes.—The boiler is to contain 230 brass tubes, of a brand and manufacture to be approved by the Railway Company's Locomotive Superintendent. Each tube is to be 1¾ ins. outside diameter, expanded at smokebox end to 1⅞ ins. outside diameter for a length of 3 ins., and contracted to 1⅝ ins. outside diameter at firebox end. Each tube to be No. 11 standard W.G. thick at the firebox end for a length of 1 ft., and then to be drawn tapered to No. 13 W.G. thick at the smoke end, the taper being on the inside only, the outside remaining parallel. The proportion for the metal in the tubes to be 70 per cent. best selected copper and 30 per cent. best Silesian spelter. The tubes are to be inspected by the Railway Company's Locomotive Superintendent or his Inspector, and supplied clean, and are not to be covered with paint or any similar coating. The maker's name to be clearly stamped on the outside of each tube. The tubes are to be expanded by a Dudgeon's tube expander, and ferruled at the firebox end only. At the smokebox end the tubes are to stand through the plate ¼ in. The tubes may also be made either of steel or iron.

Dome.—The steam dome is to be made as shown on drawing, and to be provided with steel cover. The dome is to be 2 ft. inside diameter, and 2 ft. 2 ins. high inside, and ½ in. thick. The dome is to be made in one plate, and butt-jointed as shown. A strengthening plate ½ in. thick is to be rivetted to the inside of the boiler under the dome, as shown on drawing. The hole for the dome is to be 19½ ins. in diameter. A soft steel manhole seating is to be single rivetted to the centre of the firebox top, and fitted with a cast-iron cover plate formed in one with the safety-valve columns. The cover plate and manhole seating are to be accurately faced, so that a perfect steam-tight joint can be made.

Regulator.—In the inside of the dome is to be placed a cast-iron regulator in two parts with flanged joint, to have two valves, main valve of brass and the easing valve of cast iron, to be worked from the back of the firebox. The steam pipe leading from the regulator to the smokebox is to be of hard drawn copper, No. 6 standard W.G., 5½ in. inside diameter, and is to have a brass flange brazed on where it fits into the tube plate; the other end of the pipe to have a brass collar brazed on, and is to be secured to the stand regulator pipe as shown.

Water Space.—The water space between the firebox and shell is to be 3 ins. wide at the foundation ring, and is to be enlarged upward to the dimensions shown on drawing.

Foundation Ring.—The foundation ring is to be of the best Yorkshire iron, 3 ins. wide by 2½ ins. deep, and rivetted to the inside and outside fireboxes with ⅞-in. rivets, snap headed, 2 ins. pitch, to the section as shown on drawing.

Ashpan—The ashpan is to be placed before the firebox casing, with movable doors and perforated dampers at the back and front, so arranged as to be worked from the back of the firebox. The handles for working the doors are to be placed at a convenient height on the footplate, as shown. The sides are to be of ¼-in. plates and the bottom of ¼-in. plate, of mild steel; angle irons 2 ins. × 2 ins. × $\frac{5}{16}$ in. thick, are to be rivetted to the sides and bottom with ⅝-in. rivets. The ashpan is to be of the form, and fixed, in the manner shown, by angle-irons 4 ins. × 3 ins. × ⅝ in., and cottered pins screwed into foundation rings.

Fire Bars and Carriers.—The fire bars are to be of cast iron of the form and dimensions shown; and the carriers of wrought-iron secured to the foundation ring in the manner shown on drawing.

Smokebox.—The smokebox is to be of the form and dimensions shown on drawing. The sides and crowns are to be $\frac{5}{16}$ in. thick plate, of mild steel, rivetted to the flange of the smokebox tube-plate. The front plate is to be in one, and ⅜ in. thick, flanged all round the same as the smokebox tube plate. A hole for the door is to be cut in the front plate 3 ft. 10 ins. in diameter, which is also flanged all round. The door is to be of mild steel, ⅜ in. thick, protected on the inside with a shield, placed 1⅜ ins. from door. Great care must be taken that the door, when closed, is made a perfectly air-tight joint. The cross-bar is to be made to lift out of forged brackets, which are to be rivetted to the inside of the front of the smokebox. Two handles and a gripping screw are to be provided. All the plates are to be clean and smooth, and well ground over. All rivets are to be ⅝ in. in diameter, pitched as shown on drawing, and are to be countersunk and filed off flush. The outside handles are to be finished bright. All lamp-iron brackets are to be fixed as shown.

Chimney.—The chimney is to be of cast iron, as shown on drawing, with a dripping strip round the bottom of base and accurately fitted to the smokebox. The height of the top of the chimney from rails is to be 13 ft. 2¾ inches.

Main Frames and Axle-box Guides.—The frames and frame stay-plates are to be made of the best mild Bessemer or Siemens-Martin steel, supplied by makers approved by the Railway Company's Locomotive Superintendent, and of the exact dimensions, both as regards form and thickness, as given on the drawings.

Quality.—The quality of the material to be that generally known as mild steel plate, and to be free from silicon, sulphur, or phosphorus. The ultimate tensile strain that the plates will stand to be not less than 24 nor more than 30 tons per square inch, with an extension of not less than 23 per cent. in 10 inches.

Manufacture.—All plates, whether made by the Bessemer or Siemens-Martin process, to be made in the most approved manner from ingots hammered on all sides, and, when re-heated, to be rolled truly to a uniform thickness. Both sides to be perfectly clean and free from pitting, roll marks, scale, dirt, overlapping, or other defects. Each plate to be taken from the rolls at a full red heat, and allowed to cool gradually on a flat surface. Each plate is to be sheared to the dimensions given, and in no case to be sent out before being levelled sufficiently true for machining. All plates that are wavy or buckled or in any way defective will be rejected, and must be replaced by the makers free of cost. The maker's name and date of manufacture must be legibly stamped on every plate, and not nearer the edges than nine inches.

A sample or test plate at least 2 feet square must be sent in by the maker as a sample of what will be supplied in the plates to be made under this contract, together with a complete analysis of the same. This test plate is to be ½ inch in thickness, and from it pieces will be taken for proving in the following manner.

Test.—A piece 6 ins. long will be bent over cold until the ends meet each other closely, and no fracture or sign of failure is to be observable in the heel of the bend. Pieces 3 in. wide will also be taken, and a ⅝ in. hole punched through same, which shall stand being drifted cold by taper drifts until it reaches 1½ ins. in diameter without the edges fraying or showing signs of fracture.

Samples or shearings from the plates must be tested in the presence of the Railway Company's Locomotive Superintendent or his Inspector on the premises of the maker whenever desired.

All the plates are to be perfectly level and straight throughout and marked from one template. All holes are to be drilled and rimered out to the exact sizes given, and each bolt and rivet must be turned to gauge, and fitted into its place, a good driving fit. When the frames and cylinders are bolted together, and before the boiler, wheels, and axles are put in their places, the accuracy of the work must be tested by diagonal, transverse, and longitudinal measurement.

The frames are to be placed at a distance of 3 ft. 11½ ins. apart, and to be stayed at the leading end, in front of the driving-wheels and in front of the firebox, by steel plates and angle irons, and by a cast-iron footplate at the trailing end; the steel plate stays to be planed to the exact width required and securely rivetted to the frames by cold rivets. At the leading end a steel casting with suitable flanges is to be rivetted to the frames at bottom with ¾ in. rivets pitched zig-zag, and this casting is to be provided with a boss for carrying the bogie centre-pin. This boss to be accurately turned, and to be planed on the bottom side to suit the bogie cross-slide. This casting must be perfectly square with the frames. The driving-wheels are to be placed 1 ft. 5 ins. in front of the firebox. The driving and trailing axle-box guides to be provided with adjustable wedges having a taper of one in ten, as shown, guide and wedge to be of the very best cast steel, supplied by makers to be approved by the Railway Company's Locomotive Superintendent. The top and sides are to be in one piece, free from honeycomb and all other defects, and the flanges are to be planed all over and fitted to template; they are to be fastened to the frame with bolts 1⅛ ins. in diameter, accurately turned and driven tight in the holes. The horn stays are to be attached to the guides as shown on drawing. The frames must be finished with a good smooth surface 1⅛ ins. thick, and the axle-box guides must be free from cross-winding, and square with the engine in all directions. The rubbing plate on back end of frame for the intermediate buffer is to be of wrought-iron case-hardened.

Bogie.—The bogie is to be made of the form and to the dimensions shown on the drawing. The wheels are to be placed 7 ft. 6 ins. apart, centre to centre. The frame plates are to be of the same quality as those specified for the main frames, 1 in. thick, and placed 2 ft. 7¾ ins. apart. The axle-box guides are to be of the very best cast steel, of approved make, free from honeycomb and all other defects. The flanges are to be planed all over and fitted to template. They are to be fixed to the frames by bolts ⅞ in. in diameter, accurately turned and driven tight into the holes. The frames are to be firmly secured to cast-steel stay with ¾-in. rivets, zig-zag pitch. Great care must be taken that the frames when put together are perfectly parallel, and at right angles with the steel stay. The cast-steel cross-slide is to be planed on its rubbing surfaces, and bored out to receive the bogie pin. Each side controlling spring is to be laminated, and is to consist of 16 plates 2½ ins. wide and $\frac{3}{16}$ in. thick. They are to be made of the very best quality of spring steel, manufactured from Swedish bar iron. Each spring must be thoroughly tested before being put into its place by being weighted with 2 tons, and on removal of this weight it must resume its original form. The top plate of each spring must be stamped with the maker's name and date of manufacture, and to be to the same specification as the driving and trailing springs. The plates are to be properly fitted and tempered, and are to be prevented from shifting side or endways by nibs stamped upon them. The buckles are to be sound forgings, and are to fit the springs accurately, and are to be well secured by a short wrought-iron pin driven while hot through a hole in the top of the buckle, and with a hole in the top plate. Through the centre of the casting forming the bogie pin a wrought-iron pin 3 ins. in diameter is to pass, fitted at the bottom end with a nut and washer. The hole in the stay is to be elongated to allow for the lateral motion of the cross-slide. Each spring cradle is to be made of two Yorkshire iron plates 6 ins. deep, 1⅛ ins. thick, with cast-iron distance pieces rivetted between them at each end; these cast-iron pieces are to rest on the saddles formed on the top of the axle-boxes. The springs are to be coupled to the beams by hooks as shown; the pins through the hooks are to be of steel, and the eyes of the hooks are to be case-hardened. The brackets holding the spring are to be of Yorkshire iron, and are to be bolted to the frames with 1 in. turned bolts driven in a tight fit. The whole of the work is to be of the best description, and the bogie, when finished, must be perfectly square and free from cross windings, and according to drawings.

Motion Plate.—The motion plates to be of the very best cast steel of approved make, thoroughly annealed, to be ⅞ in. thick, planed and secured to the frames by ⅞ in. turned rivets, countersunk and rivetted cold. The motion plate to be properly faced for the attachment of the slide bars, and to be as shown on drawing.

Footsteps and Handrails.—Footsteps and handrails are to be fixed on each side of the engine in the manner shown. The handrails to be carried round the front of the smokebox, and to be 1¼ ins. outside diameter. The handrail pillars are to be fixed to forged brackets, which are to be studded to the boiler as shown. The footsteps are to be roughed, and the handrails to be finished bright.

Platform and Splashers.—The platforms are to be of mild steel plates ¼ in. thick, secured to the frame, as shown on the drawing. The splashers are to be of mild-steel plate $\frac{3}{16}$ in. thick, of the form and to the dimensions shown on drawing. The rivets to be ⅝ in. diameter, flush outside. Angle irons to be 1½ ins. by 1½ ins. by ¼ in.

Cast-Iron Footplate.—A cast-iron footplate is to be fitted between the frames at the trailing end, to be of good hard metal, free from all defects. The casting to be fixed to the frames by countersunk bolts 1 in. diameter; to have suitable holes drilled to receive the draw and safety-link pins, as shown on drawing.

Sand Boxes.—Two cast-iron dry sand boxes to be provided, one on each side, in front of the driving-wheels. They are to be so arranged that the valves can be worked together by suitable gearing from the footplate; the valves are to be circular. Sand pipes are also to be fixed as shown; the sand to be led within 3 inches of the rails by wrought-iron pipes 1½ ins. inside diameter. The general arrangement of sand boxes and gear, and the details of the valves and gear to be as shown on the drawings.

Buffer Plates.—The buffer plates are to be of steel, same quality as specified for the frame plates, 7 ft. 11 ins. long, 1 ft. 7¾ ins. deep, and 1¼ ins. thick, and are to be rivetted to the stays and angle irons on the inside and outside of frames, as shown on drawing.

Buffers.—The buffers are to be of cast iron to the Company's pattern. The buffer springs are to consist of India rubber, spiral, or volute springs, to the drawing. The buffers are to be placed at a distance of 3 ft. 9 ins. apart, centre to centre, and at a height of 3 ft. 6 ins. from the rail level.

Drag Hooks, Screw Couplings, and Side Chains.—The drag hook is to be furnished with India rubber, spiral, or volute spring. The hooks, screw coupling, and side chains are to be of best iron, chain cable quality, and according to drawing.

Driving and Trailing Wheel Centres.—The wheel centres to be of good sound cast steel of approved make, free from honeycomb and other defects. One wheel centre out of 40 is to be tested to destruction under the following conditions:—

The wheel centre is to be raised in a running position, and allowed to fall upon a solid foundation from the following heights:—10 ft., 15 ft., 20 ft., 25 ft., 30 ft.

Should any wheel centre break at the two lower heights—viz., 10 ft. or 15 ft.—and show defects on hard material, the Railway Company's Locomotive Superintendent or his Inspector shall have the power to reject the whole. The wheels to be inspected on the premises of the maker.

Tensile test pieces are to be taken from the wheel centre to give a breaking strain of not less than 28 tons per square inch, with an elongation of not less than 20 per cent. in 2 inches. A test piece is to be cast on each wheel centre of a suitable length 1 in. square, and to stand a test of being bent cold through an angle of 90° without showing signs of fracture. Each wheel centre is also to be tested by being allowed to fall in a running position a distance of 4 ft. 6 ins. on to a wooden block without showing any signs of defect.

All the wheel centres must be bored and turned, and have keyways cut strictly to template, so that they shall be exactly alike, and each wheel must be forced on the axle before the tyre is shrunk on by a hydraulic pressure of not less than 80 tons. The rims must be correctly turned to gauge to receive the tyres, and the whole wheel trimmed up so that the surfaces and lines are all fair and true. The wheel centres are to be turned to a diameter of 6 ft. 7 ins.; the rims are to be 4⅞ ins. broad, 2¾ ins. thick at centre, to have 22 spokes, 2½ ins. thick at the boss, and 4 ins. deep, and at the rims 1¾ ins. thick by 3½ ins. deep. The bosses are to be bored out, parallel, to a diameter of 9½ ins., and are to be 1 ft. 5 ins. diameter. The cranks for the coupling-rods are to be cast solid with the bosses, 13 ins. centres, and bored out, parallel, to a diameter of 5¼ ins. to fit the coupling-rod crank-pins. The crank-pin holes are to be bored in a suitable quartering machine. The balance weights to be cast solid, and to be different for the driving and trailing wheels. Care to be taken that each wheel is cast with its proper balance weight. Generally the wheel centres must be as shown on the drawing.

Bogie Wheel Centres.—The bogie wheel centres are to be of good sound cast steel of approved make; quality, manufacture, and tests same as specified for driving and trailing wheel centres. Each wheel centre to be turned to a diameter of 3 ft. 3¾ ins. The rims are to be 4⅝ ins. broad, 2½ ins. thick at centre, to have 10 spokes 1⅞ ins. thick at the boss and 4 ins. deep, and at the rims 1¾ ins. thick and 3¼ ins. deep. The bosses are to be bored out, parallel, to a diameter of 7 ins., and are to be 12 ins. diameter. The wheel centres must be bored and turned strictly to template, so that they shall be exactly alike. Each wheel centre must be forced on the axle by hydraulic pressure of not less than 60 tons. The wheel centres are to be fixed to the axles without keys.

in the testing machine, after which the bar must be pushed straight six times without showing any further permanent set. The tensile strength of the bars to be not less than 45 tons per square inch, with an elongation of not less than 15 per cent. in 2 ins. Manufacture and brand to be approved by the Railway Company's Locomotive Superintendent. The plates are to be truly fitted, tempered, and stamped with the maker's name and date of manufacture. The plates to be prevented from shifting side or endways by nibs stamped upon them. Care must be taken that the nibs formed upon the plates fit the slots properly. The buckles are to be sound forgings, are to fit the springs accurately, and are to be well secured to them; the buckles to be prevented from shifting on the springs by short wrought-iron pins, driven while hot, through holes in the top and bottom of the buckle, and into a hole in the top plate and a recess in the bottom plate, as shown on the drawing. The springs are to consist of 12 plates ½ in. thick and 5 ins. broad to a span of 4 ft., and to have adjustable hangers at the end and solid hangers in the centre. Each spring must be thoroughly tested before being put in its place, by being weighted with 11 tons, and on the removal of this weight the spring must resume its original form.

Bogie Springs.—The material, workmanship, method of construction, and testing of the bogie springs must be the same as for the driving and trailing springs. The bogie springs are to consist of 14 plates ½ in. thick 5 ins. broad to a span of 3 ft. 11¾ ins.

Spring Gear.—A compensating beam to be attached to the driving and trailing springs, of wrought iron, forged as shown on the drawing, and fitted with a phosphor-bronze bush, pressed into its place by hydraulic power. It is to be carried by a forged cross-shaft, which is to be carried by two forged or cast-steel brackets. The ends of the springs which do not engage with the compensating beam must be provided with suitable forged or cast-steel hangers. The whole of the spring gear to be forged in a sound manner, free from all defects whatsoever. The spring and compensating beam brackets to be attached to the frame by ⅞-in. turned cold rivets of best Yorkshire iron, having a tensile breaking strength of not less than 22 tons per sq. in. with an extension of not less than 30 per cent. in 2 ins.

Cylinders.—The cylinders are to be 19 ins. diameter when finished, with a stroke of 26 ins. The steam ports are to be 16 ins. long and 1⅜ ins. wide. The exhaust port is to be 16 ins. long and 3 ins. wide. The bars are to be 1⅛ ins. wide. The cylinders are to be of close-grained, hard, strong cast iron; they must be as hard as they can be made to allow of their being properly fitted and finished, and must be perfectly free from honeycomb or any other defect of material or workmanship; they must be truly bored out, the front end being bell-mouthed. All the joints, covers, and surfaces are to be planed or turned and scraped to a true surface, so that a perfect joint can be obtained. All studs are to be tightly screwed. The cylinders are to be made with loose covers at both ends, provision being made on the back cover for carrying the slide bar. They are to be set in a horizontal line, placed at a distance apart of 6 ft. 2½ ins. from centre to centre, with steam chest on side, as shown on drawing. The holes in the frames and flanges of the cylinders are to be carefully rimered. When the cylinders are correctly set to their places they are to be firmly secured to the frames by turned bolts 1¼ ins. in diameter, driven home to a tight fit. The cylinders are to be covered with lagging and clothing plates 14 standard W.G. thick. The front and back cylinder covers are to be protected by clothing plates secured as shown. The cylinders, before being fixed in position, to be tested in the presence of the Railway Company's Locomotive Superintendent or his Inspector, by hydraulic pressure, to 200 lbs. per sq. in. All joints must be perfectly tight under this pressure; the front and back cylinder covers and cylinders generally to be exactly to the drawing.

Pistons and Piston-Rods.—The pistons are to be made of cast iron free from honeycomb or any other defects, to the form and dimensions shown on drawing, and are to be fitted accurately to the cone of the rods, and secured thereon by gun-metal nuts formed with collars, and taper steel pins through the nut. The piston head is to be an easy fit in the cylinder. The packing rings are to be three in number, of cast iron, ⅝ in. wide, ½ in. thick, and turned all over. The rings are to be turned larger than the diameter of the cylinders, then to be cut and sprung in to fit the bore in the cylinders, and are to be prevented from turning round in the piston by dowel pins fixed in the position shown. When finished, the whole must be an easy and accurate fit, so that the finished rod and piston can be moved readily backward and forward in the cylinder. The piston-rods are arranged to work through the hind cylinder covers, and to be 3⅝ ins. diameter, and are to be forged from the very best cast steel of approved make, with a breaking strength of 30 tons per square inch. They are to be truly fitted to the heads, and are to be tapered where they enter the cross-head, to which they are to be secured by cotters of mild Swedish steel. Full particulars of the various dimensions and tapers are to be obtained by reference to the full-sized drawings.

Metallic Packing.—Both piston rods to be fitted with metallic packing. The hind cylinder cover is to be arranged, as shown on the detail drawing, to suit this packing.

Slide Valves.—The slide valve is to be of the best bronze, to be made exactly as shown on the drawing, and with recesses in its working face.

Valve Spindles.—The valve spindles and buckles are to be of best Yorkshire iron, and of the dimensions shown on drawing. The spindles are to be guided by gun-metal glands and bushes through the steam chest; the valve spindle is to be tapered where it enters the valve rod, and is to be secured by a cottar of mild Swedish steel.

Slide Bars.—The slide bars (one to each cylinder) are to be of the very best Yorkshire iron, thoroughly case-hardened, 6 ins. by 3 ins., of a manufacture and brand to be approved by the Railway Company's Locomotive Superintendent. They are to be attached with 1¼-in. bolts to the back cylinder covers, which must be accurately fitted to receive them, and at the back ends they are to be attached with 1⅛ ins. diameter bolts to the motion plate; a brass liner ¼ in. thick is to be placed at each end between the bar and the carriers. Each bar is to have 15 lubricating recesses, placed zigzag, 2 ins. diameter, on the top, with a ⅜-in. hole in the recess leading to the bottom of the bar. Each bar to have a perfectly smooth, true, polished face all over the bearing surfaces.

Cross-heads.—The slide-block rubbing pieces are to be of cast iron, of the same metal as the cylinders, and are to be well provided with means of lubrication. The crossheads are to be of best Yorkshire iron or of the very best cast steel, free from honeycomb or any other defects. The gudgeon pins are to be of best Yorkshire iron case-hardened, and are to be prevented from turning round in the cross-head by means of a key fitted in the outer jaw. The rubbing pieces are to be securely fixed to the cross-head with ¾ in. diameter bolts well fitted into the holes. Great care must be taken that the sleeve works freely on the bar.

Valve Motion.—The valve motion is to be of the curved link type, and the expansion links are to be hung from the centre. The eccentric pulleys are to be in two parts, the smaller being of best Yorkshire iron, the larger of cylinder metal, and are to be fastened on the axle by means of keys and set screws, as shown. The eccentric straps are to be of good tough cast iron, free from honeycomb or any other defect. The throw of the eccentrics to be 6 in. The eccentric oil cups are to be fitted with a button and spring. The eccentric rods are to be of the best Yorkshire iron, secured to the straps as shown. All the wrought-iron work is to be of the best Yorkshire iron, the working parts to be well and properly case-hardened and re-cleaned up, and must be of the very best finish, and free from all marks and defects. All pins are to be of the best Yorkshire iron, case-hardened, 2 ins. diameter, and made to standard gauges. The motion is to be reversed by a screw gear fixed on trailing splasher on right-hand side of engine. The valve-rods are to work through cast-iron guides bolted to the motion plate.

The guides are to be bored out to fit the rods, and to be made of cylinder metal, and to be provided with a lubricating box as shown. The guides are to be heated to a high temperature and then dipped in oil.

Reversing Shaft.—The reversing shaft to be forged from best Yorkshire iron. The levers are to be forged solid with the shaft, which is to be placed above the motion, and carried by a cast-iron bracket with loose cap bolted to the frames with 1-in. bolts turned to gauge, and made a driving fit; these brackets are to be made of cylinder metal, and bored out to 3½ ins. diameter to take the reversing shaft. The working parts of the shaft are to be properly case-hardened. The reversing arm is to be on the outside of the bearing. The shaft to be made as shown on drawing, and to be a sound forging in every respect.

Connecting-Rods.—The connecting-rods are to be of the best Yorkshire iron forged solid in one length, 6 ft. 8 ins. from centre to centre, and are to be fitted with adjustable brasses of gun-metal at big end; the small ends are also to be fitted with gun-metal adjustable brasses. All bolts to be of best Yorkshire iron, and all cottars of mild steel; the cottars are to be accurately fitted, and provided with set screws and cross cottars. The brasses at the big and small ends are to be lined with white metal. Oil cups are to be forged solid with the big end straps; at the small end the lubrication is taken through the gudgeon pins.

Coupling-Rods.—The coupling-rods are to be forged from best Yorkshire iron, and machined out to form the **H** section; the ends are to be accurately fitted with gun-metal bushes pressed into their places by hydraulic pressure, so as to ensure a perfectly tight fit, and to be secured as shown; the bushes to have five grooves, ½ in. wide and $\frac{3}{16}$ in. deep, fitted with white metal. All oil cups for connecting-rods, coupling-rods, and eccentric straps to be provided with a button and spring, and are to be duplicates. The rods must be made in every particular as shown clearly on the detailed drawing.

Crank Pins.—The crank pins are to be of the best Yorkshire iron, properly case-hardened on the wearing surface. The hole in the wheel is to be parallel as shown; the pins are to be accurately fitted and pressed into the wheels, before the tyre is shrunk on, by hydraulic power of not less than 30 tons, and rivetted over on the inside. Cottared washers are to be placed on the ends as shown on detail drawing.

Steam Pipes.—The steam pipes in the smokebox to be of copper, No. 6 S.W.G., and 4 ins. inside diameter, to have brazing metal flanges at both ends, properly brazed to the pipes and accurately faced, so as to secure steam-tight joints. Each steam pipe is to be led to the cylinder, and is to be secured to the same with studs and brass cover-ended nuts.

Vortex Blast Pipe.—The blast pipe to be Adams's patent Vortex, of the form and dimensions shown in the drawing, with an annular exhaust. The

The manhole casing is to be of charcoal iron, No. 14 standard W.G. thick, and is to be fitted with a cast-iron shield for safety-valve columns. The dome casing is to be of charcoal iron, No. 14 standard W.G. thickness, brazed up solid and painted.

Cab.—The sides and front are to be of best best Staffordshire iron $\frac{3}{16}$ in. thick. The roof is to be of wood, tongued and grooved, and covered with oilcloth to this Company's pattern. The roof is to be supported by angle-irons and an iron strip as shown. A ledge is to be formed at each side to prevent water falling on the men. The cab is to have two windows of best polished plate glass $\frac{1}{4}$ in. thick, in brass frame, hinged on the top and provided with fastenings as shown. The front edges of the cab and top of handrail plate are to be stiffened with angle iron and beading, polished. A handrail finished bright is to be fixed on each side of the engine outside the cab. A cord communication to the whistle is to be provided on the outside of the cab on the right-hand side of engine, as shown.

General Mountings.—Each engine is to be supplied with the following:—One Ramsbottom's duplex safety valve with cast-iron columns and brass valves and seats, the springs to be set so that when the eye-bolt is screwed down to the shoulder the steam shall blow off with a pressure of 175 lbs. per square inch on the boiler. One of Bourdon's pressure gauges 7 in. in diameter to indicate up to 200 lbs. pressure to this Company's pattern. Two water gauges complete with flanges, with glass guard and with pipes leading to the ashpan. One large and one small whistle. Two steam cocks for the supply of the injectors to be fixed with the whistles to one seating on top of firebox. One blower cock placed on side of smokebox, worked by a wheel and screw valve from footplate on right-hand side of engine; and a copper pipe is also to be led from blower-cock through the smokebox to the top of exhaust pipe, and one from the blower through the tube plate to the dome. Two clack boxes, one on each side of the boilers. Two drain cocks to each cylinder, to be worked from the footplate as shown; one lubricator fixed on each side of smokebox with pipe leading to steam chest. One lubricator screwed into each front cover of cylinder. One oil box and pipes led down to top of each piston-rod and valve spindle glands, and fixed as shown. One lubricating box is to be placed over the leading and driving axle-boxes, with pipes leading to the axle-boxes and guides. One watering cock attached to the injector delivery pipe on left-hand side of engine. One regulator quadrant and stuffing box complete, finished bright. Four tapered plugs, one in each bottom corner of firebox, $1\frac{3}{8}$ ins. in diameter, 12 threads per inch. Three filling tapered plugs on back of firebox, $1\frac{3}{8}$ ins. diameter, 12 threads per inch. Four tapered wash-out plugs, two on each side of back of firebox above footplate, $1\frac{3}{8}$ ins. in diameter, 12 threads per inch. Eight wash-out taper plugs in smokebox, $1\frac{3}{8}$ ins. in diameter, 12 threads per inch. One wash-out hole with covering plate on each side of firebox at bottom. One wash-out hole with covering plate in front and back of firebox. Two small tool boxes with padlocks and keys, one box to be hung on each side of engine inside the cab. One water gauge lamp bracket, to this Company's pattern, fixed on the tray over fire door. Five lamp irons at front of engine, to this Company's pattern; four to be fixed on front of smokebox, one on front of buffer plate. All plugs and mountings are to be of gun-metal, and must be of first-class finish. Pitch of threads for mountings is to be 12 threads per inch, unless otherwise shown on drawing. The injector and whistle seatings and valves, blower cock, clack boxes, water gauges, cylinder, and steam chest lubricators are to be to this Company's pattern.

Tools.—Each engine is to be supplied with the following tools:—One complete set of spanners, including two gland and two mud plug spanners; one punch for tapered pins; one large round drift for motion pins; one flat drift for cottars; one large monkey wrench; one small monkey wrench; one hand

II.—SPECIFICATION OF SIX WHEELS TENDER.

Principal Dimensions—

	Ft.	In.
Diameter of wheels on tread,	3	9¾
Centre to centre of journals,	6	6
Length of journals,	0	9
Diameter of ,,	0	5¼
Diameter of axle in wheel,	0	6¾
,, ,, at centre,	0	6¼
Wheel base,	13	0
Length of frame,	19	9½
Total length of wheel base from centre of leading bogie wheels of engine to centre of hind wheels of tender,	45	3⅛
Length over all, from buffers of engine to hind buffers of tender,	54	8⅜
Height of centre of buffers from rails,	3	5

Tender Frame.—The frame, plates, cross stays, stretcher-plates, hind buffer-plates to be of steel, same quality and manufacture in every respect as specified for the engine main frames.

Each frame is to be made of one plate ⅞ in. thick, and all holes are to be marked and drilled from one template. The axle-box guides are to be made of cast iron, planed, fitted, bolted to frame, and must be free from cross-winding and square with the frames in all directions. The horn-stays are each to consist of two 1⅛ in. bolts, with cast-iron distance pieces accurately fitted between the horns. All the cross-stays are to be accurately fitted to the frames, and rivetted to them by ¾ in. diameter rivets. The frames are to be accurately tested by longitudinal, transverse, and diagonal measurement, and must be perfectly parallel to each other. The front buffing and draw beam is to be constructed as shown, and is to be provided with buffers fitted with volute springs to this company's pattern. The draw-bar is to be forged in one, the hole at one end being punched. Wrought-iron steps are to be provided, roughed and fixed where shown. The hind buffing and draw plate is to have a draw hook and bar, furnished with india-rubber, spiral, or volute springs, two cast-iron buffers the same as specified for the engine, two side chains and screw couplings, made of best chain cable iron, and to drawing. Two steel life guards are to be bolted to the frame, behind the hind wheels.

Axle-Boxes.—The axle-boxes are to be made of cast iron, fitted with a wrought-iron top, and with the best gun-metal bearings lined with anti-friction metal, and to have cast-iron keeps provided with lubricating pads. The axle-box bearings to be $\frac{1}{16}$ in. shorter than the axle-journal, to give clearance; front and hind axle-boxes must have ⅛ in. side play, and the centre axle-box ¼ in. side play on each side of the guides, as shown in drawing.

Springs.—Tender springs to be of the same quality, workmanship, and manufacture as specified for the engine springs. Each spring to consist of 16 plates; one plate ½ in. thick, and 15 plates $\frac{7}{16}$ in. thick, to a span of 4 ft.; each spring to be provided with hangers at the ends and buckles in the centre, as shown. Each spring to be tested with a weight of 8 tons, and must resume its original form after testing.

Wheel Centres.—The wheel centres to be of good sound cast steel of approved make, quality, and manufacture, and tests same as specified for engine. Each wheel centre to be turned to a diameter of 3 ft. 3¾ ins.; the rims are to be 4⅞ ins. broad, 2⅝ ins. thick at the centre, to have 10 spokes 2⅛ ins. thick at the boss and 4 ins. deep; at the rims 1¾ in. thick and 3¼ ins.

of lubrication; the brake screw, which is to be left-handed, is to work in a cast-iron column bolted to the foot plate at the front end of the tender, and the front pulling rod is to be provided with adjustment as shown. Each wheel is to have one cast-iron brake block applied to it. The brake gear is to be made of the very best hammered scrap iron, all the pins and working parts being of wrought iron case-hardened; all pins to be to drawing, and to have brass bushes when shown. The steam is to be led from the engine to the cylinder with a connection as shown. The brake material—if fitted with the vacuum brake—is to be obtained from the Vacuum Brake Company, and to consist for each tender of one main air pipe with the necessary T-pieces, elbows and clips, one of Clayton's hose and couplings for the front of tender, one of Clayton's hose and couplings for back of tender, one end-pipe with cast-iron bend, one dummy, one dirt recipient. The brake, cylinder, piston, and rod complete are to be supplied by the contractor. The brake gear generally to be as shown on drawing.

Painting.—Before any paint is applied the iron work must be clean and free from scale or rust. The inside of the tank is to have two good coats of thick red-lead paint, the outside being prepared and finished in a similar manner to the engine. The top and bottom of the tank, foot plate, and brake work are to have one coat of lead-colour paint, and one coat of Japan black.

The gilt numbers are to be put on the tender buffer plate, and letters on sides according to instructions and samples which will be supplied, and all the iron work is to be stamped with the Company's initials.

,,	Great Northern, . . .	4/6	21	34	4	7	3280	34·0	210	78 0	96 0	"Mastodon" type.

BELL AND BAIN, LIMITED, PRINTERS, GLASGOW.