THE WINDMILL

AS A PRIME MOVER.

BY

ALFRED R. WOLFF, M.E.,

CONSULTING ENGINEER, MEMBER AMERICAN SOCIETY OF MECHANICAL ENGINEERS, ETC.

SECOND EDITION.
FIRST THOUSAND.

NEW YORK:
JOHN WILEY & SONS,
43–45 East 19th Street.
1900.

Dedicated to

MY FRIEND

DR. I. ADLER.

PREFACE.

THE aim of the author in preparing this work was, to present, in one treatise, a consideration of the more important features of windmill theory and practice, sufficient to enable the engineer and the user to decide as to the actual state of windmill construction, its history and progress, its probable direction of development, and the degree of economy attained as compared with that of other prime movers.

He was led to the preparation of the work because the information on this topic was confined to articles in periodicals, pamphlets, and transactions, together with brief treatises in text-books; no one having as yet made a careful and complete study of this important subject.

During the past nine years the author has had occasion, in the course of his professional work, to pay close attention to the theory and practice of windmill construction, and has published, at various times, professional notes setting forth some of the results of his investigations. These papers met with so kind a reception from the engineering fraternity, that he was induced to present them in a more connected form, and to investigate the subject still farther; so that this first treatise on the Windmill as a Prime Mover is now given to the public.

Many technical works have been consulted; and proper credit has been given, as far as the author is aware, in every case. His special thanks are due to a number of prominent American steam-pump manufacturers for furnishing data of durability and cost of their pumps. Without such data, it would have been difficult to present the comparison in Chap. IX. on "The Economy and Capacity of the Windmill," which is deemed of some value to users in deciding upon the relative economic bearing of the windmill as a prime mover.

Finally, it is but just for the author to express his thanks to Messrs. John Wiley & Sons for the encouragement afforded in the publication of a work which of necessity will have a limited sale.

38 PARK ROW, NEW YORK,
June 1, 1885.

CONTENTS.

INTRODUCTION.

THE USE OF THE WINDMILL.

CHAPTER I.

WIND: ITS VELOCITY AND PRESSURE.

CHAPTER II.

THE IMPULSE OF WIND ON WINDMILL BLADES.

CHAPTER III.

THE EARLY HISTORY OF WINDMILLS.

CHAPTER IV.

EUROPEAN WINDMILLS.

CHAPTER V.

AMERICAN WINDMILLS.—SIDE-VANE GOVERNOR MILLS.

CHAPTER VI.

AMERICAN WINDMILLS (CONTINUED).

Centrifugal-governor Mills.

CHAPTER VII.

AMERICAN WINDMILLS (CONCLUDED).

Other types. — Velocity Regulation, etc.

CHAPTER VIII.

EXPERIMENTS ON WINDMILLS.

CHAPTER IX.

THE CAPACITY AND ECONOMY OF THE WINDMILL.

CHAPTER X.

USEFUL DATA IN CONNECTION WITH WINDMILL PRACTICE.

THE
WINDMILL AS A PRIME MOVER.

INTRODUCTION.

THE USE OF THE WINDMILL.

The following questions have been frequently asked by those interested in the study of windmills: "Why are not windmills more generally used?" "Should they not have an economic use; for example, to pump water?"

These questions, in various forms, but always to the same intent, have been propounded, not only by laymen, but even by professional engineers of noted ability and wide experience in their specialties. The invariable answer of the author has been to the effect, that in truth windmills are not only economical prime movers for specific purposes, but that such application and economy are, in fact, better appreciated to-day than they have ever been before; in other words, that there are more windmills in use at the present time than at any other period in the history of the world.

To place the number of windmills at work in America at several hundred thousand, is to give an estimate which those who have been interested in this department of engineering, and who have travelled along the main railroad lines of the country, must pronounce as low. And when we further learn that in some single cities of the Union over five thousand windmills are manufactured, on an average, each year, it does seem remarkable that so general a lack of acquaintance with the fact of their extended use should be the rule with so many otherwise well-informed and observant men.

That this is due to an impression that windmills must be antiquated, from the nature of things, there can be no doubt. There was a time when the natural forces of wind and water were the only ones at the command of man for industrial purposes, and when the motors driven by these forces monopolized all industrial pursuits which man did not accomplish by his own physical exertion. Then came the recognition of the value of steam as a motive power; and the era of Watt practically introduced the steam-engine, with its great amount of power concentrated in a small weight and volume, with its reliability of action and its close regulative qualities. This was certain to speedily and effectively take the place of windmills in many industries. Independent of the fact that it enabled the creation of the most startling and important innovations, — such, for instance, as railroad traffic, and a host of others that wind and water motors did not permit, — its extended use, its concentrated power, and its unceasing action gave an appearance, in the popular mind at least, of unreliability, clumsiness, and smallness of power, to wind motors, sufficient to account for the general misapprehension under discussion.

Though the advent and general application of steam replaced the windmill in many of its strongholds, and restricted its use to a few specific purposes, such use has become a very extended one, and will be still further enlarged in the near future, as the true value of the windmill as a prime mover becomes better appreciated, and as electrical storage batteries become more of a success.

For certain specific purposes, and, primarily among them, for pumping water in moderate quantities, the windmill is not only a thoroughly reliable, but at the same time the most economical * prime mover, and, as far as judgment can now be passed, wiil hold this place for many years to come.

The power purposes which windmills are specially fitted to subserve are circumscribed and defined by the character of the motive fluid, wind. Though the wind may be relied upon to blow with sufficient velocity to drive a windmill to its average working capacity eight † hours a day, it is evident that there are minutes and hours of total calm.‡

Therefore the employment of the windmill is restricted to two classes of use: —

---

* See chap. ix. p. 132.

† See pp 8, 136.

‡ See p. 8.

I. TO WORK OF THAT NATURE WHICH ADMITS OF A SUSPENSION DURING A CALM.

For instance, to work on a farm, such as shelling corn and cutting feed, driving small sawmills, and the like.

II. TO WORK WHERE ACCUMULATED POWER CAN BE STORED FOR FUTURE USE.

Under this caption the windmill has its main use, and three specific applications at once suggest themselves. The first is that which now claims the extended employment of windmills.

1. *For pumping and storing water.* A few special adaptations of this use may be mentioned. Water is supplied to country houses and farms, to manufacturing establishments, and to the upper stories of office buildings and domestic dwellings, when the pressure in the reservoir is not sufficient to effect this; railway water stations and tanks are supplied with water; and dry lands are irrigated.

(Sand has also been raised, in place of water, and has been applied to the driving of an overshot wheel.)

2. *For compressing and storing air.*

3. *For driving dynamo-machines to charge electrical accumulators.* This was first suggested in 1881 by Sir William Thomson. The application of the windmill to this purpose will soon come actively into play when storage batteries have been developed to a greater success than is attained at the present time.

CHAPTER I.

WIND: ITS VELOCITY AND PRESSURE.

In the treatment of this interesting topic, we have in the main restricted ourselves to a consideration of those data of importance in the theory and practice of windmill construction and use. It is expedient to mention this at the outset; inasmuch as this chapter makes but slight mention of the effect of wind on other than plane surfaces, and is therefore of but slight value to those who are in search of information about the effect of wind on bridges, in which the members are curved and of complicated shapes.

In fact, the knowledge extant of the effect of wind on other than plane surfaces is scanty, and on the whole conflicting. Undoubtedly, further experiments are needed to definitely settle the problem of wind pressure on plane surfaces; still, knowledge as to this particular is far more accurate than is that relating to the wind pressure on curved surfaces. This is evident from the records of experiment, and the opinions of those authorities who have given the matter their attention.

Definition of Wind. — When the density of air is uniform throughout, the atmosphere remains at rest; but as soon as this equilibrium is destroyed, a movement results which takes the name of wind. If in one part of the atmosphere the air becomes more dense, it rushes towards that part whose density is less, in the same manner that the air compressed in a pair of bellows escapes by its orifice. These currents of air are caused, directly or indirectly, by differences of temperature at different times and localities, giving rise to changes of density, and varying the production and condensation of watery vapor.

Average Movement and Velocity. — Through the courtesy of the chief signal-officer of the army, we are enabled to present the following statement, showing the average monthly movement of the wind, in miles, at the below-named stations of the Signal-Service, United States Army (computed and compiled from the records on file at the office of the chief signal-officer of the army).

TABLE I.

STATIONS.	Average Movement of the Wind.													
	No. of Years' Data.	January.	February.	March.	April.	May.	June.	July.	August.	September.	October.	November.	December.	Average* per Month.
Chicago, Ill.	11	6691	6219	7342	6859	6422	5587	5314	5138	5588	6325	6177	6469	6178
Cincinnati, O.	12	4726	4639	5601	4835	4327	4005	3576	3199	3453	3924	4326	4622	4269
Denver, Col.	12	4708	4119	5415	5288	5070	4538	4532	4178	3963	4404	4304	4203	4560
Eastport, Me.	11	9215	8583	9660	7341	6275	4927	4718	4354	5456	7096	8735	8793	7096
Galveston, Tex.	12	7682	7245	7523	7794	7332	6250	5820	5184	6486	7063	7989	7721	7007
Jacksonville, Fla.	12	4348	4665	5900	5436	5006	4949	4692	4611	4635	5127	4687	4586	4887
Moorhead, Minn.	3	8684	7720	10088	8552	9029	6972	7647	7447	6944	7784	8298	8314	8123
New-York City	9	7238	7292	8442	7001	6353	5683	5605	5423	6318	6884	7465	7659	6780
Omaha, Neb.	12	6807	6358	8035	7854	7092	5778	5200	5051	5557	6552	7084	6551	6493
Portland, Oreg.	12	4455	3470	3815	3402	3586	3358	3527	3033	3014	2951	3214	3471	3441
Prescott, Ariz.	5	3002	3882	5155	6140	6072	5346	4283	3494	3621	4049	3552	2862	4288
St. Louis, Mo.	12	7597	7005	8662	7690	7184	6406	5712	5532	6086	6920	7454	7454	6975
Salt Lake City, Utah . . .	10	2923	2831	4336	4610	5008	4397	4283	4282	3955	3631	2809	2602	3806
San Francisco, Cal. . . .	12	5349	4961	6593	7236	8397	9083	9578	9014	7129	5848	4420	4761	6864
Average each * month. . .	-	5987	5642	6898	6431	6225	5520	5320	4996	5157	5611	5751	5719	-

General Average, 5,769 Miles per Month.*

---

* Computed by the author from data furnished by the chief signal-officer, United States Army.

It has been found by experience, that it requires, on an average, a wind of a velocity of six miles per hour to drive a windmill, and that the latter will run, on an average, eight hours per day. From this it is safe to assume that one-third the total movement of the wind is lost, as far as the work of the windmill is concerned, and the rest distributed on the eight hours of work. Then, dividing $\frac{5769 \times 2}{3} = 3846$ by $30 \times 8 = 240$, we find the average velocity of wind, during the eight hours of work of the windmill, to be equal to $\frac{3846}{240}$, or 16 miles per hour; or, $16 \times 1.46\frac{2}{3} = 23.5$ feet per second.

Relation between Pressure and Velocity of Wind.— In 1876* the author published the following method of finding the pressure corresponding to a given velocity of wind, when the wind impinged upon a plane surface perpendicular to its course. It differed from other methods more especially in taking into account the effect of temperature. As will be seen farther on, a variation in temperature from 0° to 100° F. produces a difference in the amount of pressure for a given velocity, of over one-fifth the total amount. In making the computations for a correct table, attention was paid to the following facts:—

That the pressure depends upon both the velocity and the density of the air; that this density depends upon the temperature, the barometric pressure, and the pressure due to the motion of the air.

---

* Engineering and Mining Journal, Sept. 23, 1876.

Let p = barometric pressure, in pounds per square foot, at any level, temperature of air being 32° F., absolute temperature t_1 = 491.4 degrees;
P = pressure, in pounds per square foot, due to the motion of the air;
p_1 = barometric pressure (average) at the level of the sea;
d_1 = density of air under pressure $p + P$ when t_1 = 491.4 degrees;
d_2 = density of air under pressure p_1 when t_1 = 491.4 degrees;
d = density of air under pressure $p + P$, the air being at any absolute temperature t.

Then $$d_1 = \frac{(p + P)d_2}{p_1} \quad \text{and} \quad d = \frac{(p + P)d_2 \times t_1}{p_1 \times t}. \qquad (1)$$

It has been found by experiment, that, for $p_1 = 2116.5$ pounds per square foot, and $t_1 = 491.4$ degrees (32° F.), $d_2 = 0.080728$ pound. Substituting these values in equation (1),

$$d = \frac{0.018743(p+P)}{t}. \qquad \text{(I.)}$$

Let c = velocity of the wind, in feet per second;
Q = volume of air carried along per square foot in one second;
d = density of air, as found above;
g = velocity, in feet per second, generated by gravity;
P = pressure of wind per square foot of surface.

Then $$P = \frac{dQc}{g}. \qquad (2)$$

$Q = c$ cubic feet per second; therefore, from equation (2),

$$P = \frac{dc^2}{g}. \qquad \text{(II.)}$$

Substituting value of *d* from equation (I.) into equation (II.), we have

$$P = \frac{0.018743(p + P)c^2}{tg}, \qquad (3)$$

therefore

$$P = \frac{p \times 0.018743}{\frac{t \times 32\frac{1}{6}}{c^2} - 0.018743}. \qquad \text{(III.)}$$

By substitution of values for the velocity *c*, the barometric pressure at 32° F. for *p*, and the temperature expressed absolutely for *t* in equation (III.), the theoretical pressure corresponding to these values is readily ascertained. Now, some of this pressure is lost by friction of the particles of air in motion, so that the pressures found from equation (III.) must be multiplied by a co-efficient to make them identical with actual pressures. To determine this co-efficient (or the ratio of the actual pressure to the theoretical), a series of observations were made, in which the actual pressure of wind, its velocity, the temperature, and the barometric pressure, were recorded at the same time. The co-efficient thus determined was 0.93. While exercising all care possible at the time to insure accurate results, the methods used were not such as to meet the author's entire satisfaction at the present date; and this co-efficient is therefore given with some degree of reservation, though it is deemed to be not far from correct. Until more accurate experiments shall have been made, it will be safe to use this co-efficient in calculations for practical work. Multiplying equation (III.) by this co-efficient, we find equation (IV.), from which, by substitution of proper values for p, t, and c, we can calculate P_1 = the actual pressure corresponding to these values,

$$P_1 = \frac{0.017431 \times p}{\frac{t \times 32\frac{1}{6}}{c^2} - 0.018743}. \qquad \text{(IV.)}$$

When $p = 2116.5$ pounds per square foot = average atmospheric pressure at the level of the sea,

$$P_1 = \frac{36.892887}{\frac{t \times 32\frac{1}{6}}{c^2} - 0.018743}. \qquad \text{(V.)}$$

By substitution in equation (V.) the following table (Table II.) has been constructed. For any other barometric pressure, the figures in Table II. must simply be multiplied by the ratio of this barometric pressure reduced to its value for temperature of air = 32° F. to 2116.5. Thus, letting p_3 = barometric pressure at any absolute temperature t, then $p = \frac{p_3 \times t}{491.4}$, and the table must be multiplied by $\frac{p}{2116.5}$.

TABLE II.

SHOWING RELATION BETWEEN VELOCITY AND PRESSURE OF WIND.

Velocity of Wind.		Pressure of Wind, in Pounds per Square Foot of Plane Surface Perpendicular to its Course, when p = 2116.5 and Temperature of Wind =										
Miles per Hour.	Feet per Second.	0° F.	5° F.	10° F.	15° F.	20° F.	25° F.	30° F.	35° F.	40° F.	45° F.	50° F.
1	1.46⅔	0.005371	0.005312	0.005256	0.005201	0.005147	0.005094	0.005042	0.004990	0.004940	0.004889	0.004842
2	2.93⅓	0.021482	0.021252	0.021025	0.020802	0.020586	0.020373	0.020165	0.019962	0.019761	0.019565	0.019374
3	4.39⅓	0.048335	0.047814	0.047305	0.046807	0.046318	0.045841	0.045372	0.044914	0.044465	0.044026	0.043591
4	5.86⅔	0.085930	0.085006	0.084100	0.083214	0.082345	0.081495	0.080663	0.079847	0.079048	0.078264	0.077496
5	7.33⅓	0.134271	0.132824	0.131409	0.130024	0.128668	0.127339	0.126038	0.124764	0.123514	0.122290	0.121090
6	8.80	0.193354	0.191271	0.189239	0.187240	0.185287	0.183374	0.181500	0.179665	0.177867	0.176103	0.174374
7	10.26⅔	0.263186	0.260353	0.257588	0.254863	0.252205	0.249601	0.247051	0.244552	0.242112	0.239703	0 237350
8	11.73⅓	0.343767	0.340066	0.336442	0.332895	0.329423	0.326023	0.322690	0.319427	0.316228	0.313093	0.310019
9	13.20	0.436283	0.430524	0.425829	0.421340	0.416945	0.412640	0.407823	0.404292	0.400243	0.396285	0.392385
10	14.66⅔	0.537188	0.531404	0.525741	0.520200	0.514772	0.509457	0.505124	0.499150	0.494151	0.489252	0.484429
11	16.13⅓	0.650036	0.643035	0.636183	0.629476	0.622908	0.616477	0.610207	0.604003	0.597955	0.592026	0.586212
12	17.60	0.773645	0.765308	0.757157	0.749171	0.741357	0.733608	0.726204	0.718857	0.711656	0.704600	0.697681
13	19.06⅔	0.908020	0.898240	0.888667	0.879296	0.870122	0.861136	0.852335	0.843711	0.835260	0.826977	0.818857
14	20.53⅓	1.053166	1.041821	1.030718	1.019849	1.010206	0.998769	0.988575	0.978572	0.968770	0.959162	0.949743
15	22.00	1.209087	1.196062	1.183314	1.170835	1.158616	1.146650	1.134928	1.123444	1.112190	1.101159	1.090344
16	23.46⅔	1.375798	1.360966	1.346460	1.332258	1.318354	1.304737	1.291397	1.278330	1.265523	1.252964	1.240664
17	24.93⅓	1.553273	1.536540	1.520160	1.504126	1.488425	1.473052	1.457991	1.443235	1.428786	1.414602	1.400706
18	26.40	1.741556	1.722792	1.704423	1.686444	1.668839	1.651599	1.634711	1.618167	1.501951	1.586058	1.569519
19	27.86⅔	1.940634	1.919720	1.899252	1.879215	1.859596	1.840384	1.821564	1.803125	1.785056	1.767345	1.749982
20	29.33⅓	2.150516	2.127337	2.104653	2.082447	2.060705	2.039361	2.018555	1.997617	1.978095	1.958464	1.939225
25	36.66⅔	3.362250	3.325986	3.290499	3.255761	3.221749	3.188486	3.155813	3.123847	3.092521	3.061819	3.032543
30	44.00	4.845284	4.792984	4.742002	4.691710	4.642662	4.594628	4.547752	4.501482	4.456311	4.412038	4.368636
35	51.33⅓	6.600829	6.529525	6.459835	6.391739	6.324565	6.259067	6.194814	6.132081	6.070498	6.010033	5.950698
40	58.66⅔	8.630351	8.537028	8.445701	8.356310	8.268791	8.183131	8.099137	8.016896	7.936307	7.857321	7.777933
45	66.00	10.935522	10.817138	10.701289	10.587884	10.476877	10.368165	10.261687	10.157373	10.055155	9.954978	9.856776
50	73.33⅓	13.518265	13.371732	13.228340	13.087991	12.950585	12.816051	12.684268	12.555160	12.428668	12.304691	12.183167
60	88.00	19.525304	19.313019	19.105299	18.902010	18.702993	18.508122	18.317252	18.130194	17.947145	17.767641	17.591679
80	117.33⅓	34.981530	34.598320	34.223330	33.856440	33.497300	33.145730	32.801460	32.464240	32.133920	31.810220	31.493000

TABLE II. — *Concluded.*

SHOWING RELATION BETWEEN VELOCITY AND PRESSURE OF WIND.

Velocity of Wind.		Pressure of Wind, in Pounds per Square Foot of Plane Surface Perpendicular to its Course, when p = 2116.5 and Temperature of Wind =									
Miles per Hour.	Feet per Second.	**55° F.**	**60° F.**	**65° F.**	**70° F.**	**75° F.**	**80° F.**	**85° F.**	**90° F.**	**95° F.**	**100° F.**
1	1.46⅔	0.004796	0.004750	0.004705	0.004660	0.004617	0.004574	0.004532	0.004491	0.004450	0.004410
2	2.93⅓	0.019185	0.019001	0.018818	0.018642	0.018586	0.018294	0.018128	0.017964	0 017801	0.017641
3	4.39⅓	0.043166	0.042751	0.042344	0.041944	0.041551	0.041166	0.040788	0.040717	0.040052	0.039694
4	5.86⅔	0.076743	0.076008	0.075277	0.074568	0.073870	0.073185	0.072514	0.071854	0.071205	0.070568
5	7.33⅓	0.119912	0.118758	0.117625	0.116515	0.115424	0.114355	0.113305	0.112274	0.111261	0.110267
6	8.80	0.172679	0 171017	0.169386	0.167786	0.166216	0.164675	0.163153	0.161678	0.160219	0.158784
7	10.26⅔	0.235043	0 232780	0.230560	0.228382	0.226244	0.224148	0.222091	0.220091	0.218082	0.216140
8	11.73⅓	0.307005	0.304050	0.301150	0.298306	0.295514	0.292774	0.290086	0.287444	0.284852	0.282265
9	13.20	0.388570	0.384828	0.381159	0.377558	0.374025	0.370555	0.367153	0.363811	0.360529	0.357305
10	14.66⅔	0.479739	0.475121	0.470587	0.466142	0.461779	0.457498	0.453295	0.449169	0.445118	0 441195
11	16.13⅓	0.580513	0.574923	0.569440	0.564058	0.558780	0.553600	0.548513	0.543527	0.538644	0.533815
12	17.60	0.690824	0.684244	0.677718	0.671315	0.665032	0.658865	0.652815	0.646868	0.641032	0.635301
13	19.06⅔	0.810894.	0.803085	0.795424	0.787909	0.780463	0.773296	0.766191	0.759216	0.752413	0.745638
14	20.53⅓	0.940507	0.931449	0.922564	0.913850	0.905292	0.896879	0.888655	0.880567	0.872587	0.864814
15	22.00	1.079746	1.069347	1.059139	1.049130	1.039309	1.029670	1.020208	1.010919	1.001797	0.992841
16	23.46⅔	1.228542	1.216763	1.205154	1.193758	1.182589	1.171621	1.160853	1.150283	1.139902	1.129707
17	24.93⅓	1.387083	1.373721	1.360613	1.347754	1.335135	1.322751	1.310628	1.298659	1.286939	1.275429
18	26.40	1.554854	1.540180	1.525506	1.511102	1.496765	1.483066	1.469435	1.456052	1.442909	1.429470
19	27.86⅔	1.732957	1.716260	1.699882	1.683813	1.668046	1.652571	1.637380	1.622467	1.607822	1.593439
20	29.33⅓	1.920357	1 901853	1.883702	1.865894	1.848420	1.831270	1.814436	1.797908	1.781722	1.765740
25	36.66⅔	3.002206	2.973261	2.944892	2.917015	2.889683	2.862857	2.836526	2.810674	2.785290	2.760359
30	44.00	4.326079	4.284344	4.243405	4.203242	4.163832	4.125157	4.087178	4.049715	4.013315	3.979371
35	51.33⅓	5.892963	5.836055	5.780246	5.725495	5.671771	5.619046	5.568291	5.516483	5.466594	5.417590
40	58.66⅔	7.703980	7.627948	7.556501	7.484862	7.414568	7.345581	7.277867	7.211390	7 146115	7.082012
45	66.00	9.760493	9.666070	9.573460	9.482606	9.393460	9.305975	9.220106	9.135806	9.053001	9.971746
50	73.33⅓	12.064021	11.947178	11.832584	11.820187	11.609840	11.501614	11.392659	11.291064	11.188654	11.088085
60	88.00	17.419165	17.250017	17.084114	16.921371	16.761700	16.605025	16.451238	16.300276	16.151954	16.006591
80	117.33⅓	31.182030	30.877150	30.578190	30.284930	29.997260	29.715020	29.438010	29.166110	28.899220	28.863716

The relation between the pressure and velocity of wind given above corresponds quite closely, when the temperature is at about 45° F., with the following table, originally communicated by Mr. Rouse to Smeaton, and now quite generally adopted for ordinary calculations.

TABLE III.

THE ROUSE-SMEATON TABLE OF WIND PRESSURES.

Velocity of the Wind.		Pressure.	Common Appellations of Force of Wind.
Miles per Hour.	Feet per Second.	Per Square Foot, in Pounds.	
1	1.47	0.005	Hardly perceptible.
2	2.93	0.020	Just perceptible.
3	4.40	0.044	
4	5.87	0.079	Gentle, pleasant wind.
5	7.33	0.123	
10	14.67	0.492	Pleasant, brisk gale.
15	22.00	1.107	
20	29.34	1.968	Very brisk.
25	36.67	3.075	
30	44.01	4.429	High wind.
35	51.34	6.027	
40	58.68	7.873	Very high storm.
45	66.01	9.963	
50	73.35	12.300	
60	88.02	17.715	Great storm.
80	117.36	31.490	A hurricane that tears up trees, carries buildings before it, etc.
100	146.70	49.200	Immense hurricane.

The formula which, in its general form, applies alike to Tables II. and III., is $P = \frac{dc^2}{g}$, equation (II.); or, for 45° temperature, $P = 0.005c^2$, equation (VI.), in which c is velocity in miles per hour.

Inasmuch as the correctness of this formula has been questioned by some engineers of standing, who have maintained that the pressure is equal to $\frac{dc^2}{2g}$ $\left(\frac{c^2}{2g}\right.$ being equal to $\left.h\right)$, it is well to quote the following authorities in support of the analysis given above:—

Weisbach ("Mechanics of Engineering," edition of Eckley B. Coxe, 1882, p. 1030, § 510), presenting the formula $P = \zeta\frac{v^2}{2g}F\gamma$, equation (VII.), in which ζ denotes an empirical number dependent upon the shape of the surface, says this "general formula for the *impulse and resistance of an unlimited stream* is also applicable to the *impulse of wind and to the resistance of the air*."

In § 511 we learn, that, "according to *Du Buat's* experiments, and those of *Thibault*, we can put, for the impulse of water and air against a plane surface at rest, $\zeta = 1.86$." It will be noted that this co-efficient substituted in equation (VII.) gives the expression $P = 0.93\frac{v^2}{g}F\gamma$, or the same co-efficient, 0.93, by which equations (II.) and (III.) were multiplied to obtain the figures in Table II. In vol. ii. (edition of Du Bois, p. 652, § 342) Weisbach again gives the value of P as equal to $1.86\frac{v^2}{2g}F\gamma$, and continues, "or, since $\frac{1}{2g} = 0.0155$, $P = 0.028830v^2F\gamma$; or, if we take the density of the wind, $\gamma = \frac{62.5}{800} = 0.078125$ pounds, $P = 0.002252 v^2 F$: therefore, if the area of the surface is one square foot, the pressure of the wind is $P = 0.002252 v^2$ pounds."

v, in the above expression, equals feet per second. Remembering that 1 mile per hour equals $1.46\frac{2}{3}$ feet per second, the pressure of the wind, when c equals miles per hour, becomes

$$P = 0.002252 \times 1.46\tfrac{2}{3} \times 1.46\tfrac{2}{3} c^2,$$

or

$$P = 0.005 c^2,$$

same as equation (VI.).

Rankine ("A Manual of the Steam-Engine and other Prime Movers," edition 1874, p. 163, § 144) says, —

> "The direction and amount of the pressure exerted by a jet or stream of water [or of wind — A. R. W.] against a solid surface are determined by the following principles, which are the expression of the *second law of motion* as applied to this case: —
>
> "1. The direction of that pressure is opposite to the direction of the change produced in the motion of the stream during its contact with the surface.
>
> "2. The magnitude of that pressure bears to the weight of water flowing along the stream in a second, the same ratio which the velocity per second of the change in the motion of the stream bears to the velocity generated by gravity in the second [viz., $g = 32.2$ feet per second]."

On p. 164 the magnitude of the pressure is expressed by $\frac{DQ\overline{HC}}{g}$, in which DQ is the weight of the flow of water in a second, and $\overline{HC}$ represents the velocity of the *change of motion* undergone by the jet during its contact with the vane. When the vane is at rest, then $\overline{HC}$ equals the original velocity of the jet c, and Rankine's formula becomes

$$P = \frac{DQc}{g} \quad \text{or} \quad P = \frac{Dc^2}{g},$$

same as equation (II.).

Mr. T. Hawksley, past president Institution of Civil Engineers ("Proceedings of the Institution of Civil Engineers," vol. lxix., 1882), referring to the pressure of wind upon a fixed plane surface, maintained that the general solution of the problem might be thus briefly stated: —

"Let v = velocity of the current in feet per second;
h = the height through which a heavy body must fall to produce the velocity of v;
w = the weight, in pounds, of a cubic foot of the impinging fluid [for atmospheric air, about 0.0765 pounds];
g = 32, the co-efficient of gravity.

"Then $h = \frac{v^2}{2g}$; and since p, the pressure of a fluid striking a plane surface perpendicularly, and then escaping at right angles to its original path, was that due to *twice* the height h (D'Aubuisson de Voisins' Hydraulics, Rouse's Experiments), then

$$p = \frac{wv^2}{g} = \left(\text{for atmospheric air}\right) \frac{0.0765v^2}{32} = \left(\frac{v^2}{20}\right)^2 \text{ very nearly,"}$$

or $\frac{1}{400}v^2$ very nearly; or, if c equals miles per hour,

$$P = \frac{1.46\frac{2}{3} \times 1.46\frac{2}{3}c^2}{400} \quad \text{or} \quad \frac{1}{200}c^2 \text{ nearly,}$$

which is again equivalent to equation (VI.).

Mr. Rogers Field, in the same discussion ("Proceedings of the Institution of Civil Engineers," session 1881–82, vol. lxix.), agreed with the above presentation of Mr. Hawksley, but said that "this could not, of course, be strictly accurate, because other factors must enter the question, such as the density of the air, which would be affected by the temperature of the air and the height of the barometer."

It should be remarked, that the analysis and Table II., presented on pp. 8–13, originally communicated by the author in 1876, take account of the very factors which Mr. Field mentions.

Professor Jules Gaudard, in his paper on "The Resistance of Viaducts to Sudden Gusts of Winds" ("Proceedings of the Institution of Civil Engineers," vol. lxix., 1882), makes an analysis of the pressure of wind, finds the same equal to $P = \frac{\Pi v^2}{g} s \sin a$, and says, "As $\frac{v^2}{g}$ is double the height which the column of water would require to fall to attain a velocity v at the bottom of fall, it follows that the dynamical pressure, in the case of vertical incidence, may amount to double the weight of the same column in a state of rest." In a joint discussion of his own paper and that of Mr. Charles

B. Bender, Professor Gaudard said he "would come back to the theory given in various treatises on mechanics, such as Mr. Bresse's 'Hydraulique' (p. 311 of the 1860 edition), which theory, based on the extinction of the amount of motion by the re-action of the ground, resulted in representing the theoretical pressure by double the height of the fall. The total dynamic effect should really be more powerful than the simple weight of a fluid column at rest: the rate of flow played an important part. On the other hand, it should be remembered, that the theory disregarded viscosity, the mutual shocks of the liquid molecules during their fall, the clashing of their motion inducing either vacuums or an admission of air, — all constituting disturbing causes, which doubtless notably modified the action, and rendered it necessary to leave the last word on this subject to the result of experience." True as are these remarks of Professor Gaudard, it should be observed, that, when the fluid is air, the disturbing causes of molecular action, viscosity, and the like, will not represent a very large percentage of the theoretical dynamic effect.

Dr. William Pole, in the same discussion, figured the theoretical pressure as only one-half the amount given above, considering the dynamic pressure equal to the statical weight of a column whose height equals $\frac{v^2}{2g}$, but added, that "there appeared reason to think, that, when the force of the wind was actually received on flat surfaces, the pressure was considerably in excess of these amounts."

All of the above tends to give strong support to the analysis presented on pp. 8–13; but there is one great authority differing from the same, whose work is deserving of the highest consideration and credit, and the results of whose scientific observations, throwing some doubt on the accuracy of the above analysis, should be noted here.

*Hagen** (Berlin, 1874) gives, as the result of very careful observations of wind of moderate velocities, the following formula,

$$P = (0.0028934 + 0.001403p)SV^2,$$

in which P = total pressure in pounds avoirdupois, p = the outline or perimeter of the exposed surface in feet, V = velocity in miles per hour, S = area in square feet. The formula applies to plane surfaces (of no considerable depth) placed normal to the incident wind, and with the density of the air corresponding to a barometric height of 29.84 inches and a temperature of 59° F. If $S = 1$ square foot, $p = 4$, and Hagen's formula becomes

$$P = 0.0035949V^2;$$

while for 60° F., Table II. shows

$$P = 0.004750V^2,$$

or, the pressure obtained experimentally by Hagen is

---

* Appleton's Cyclopædia, article Wind, by Professor Cleveland Abbe.

over twenty-five per cent less than that recorded in Table II.

Thus, while for the time being, adopting the analysis and values recorded on pp. 8–13, supported by the authority of D'Aubuisson de Voisin, Bresse, Weisbach, Rankine, Hawksley, Field, and Gaudard, we feel that the same must be experimentally verified before being finally accepted as correct; and we note that the careful scientific observations of one of the greatest specialists (Hagen) give results differing considerably from the data provisionally adopted. It remains to be seen whether future experimental evidence will support these results, or the formula given by Hagen.

Velocity of Wind as affected by Height of Observation. — *Mr. Thomas Stevenson*, member of Institution of Civil Engineers ("Journal of the Scottish Meteorological Society," 1881), finds that the velocity of the wind varies with the height above the surface of the ground, and proposes the following formula for finding the velocity, V, at any height, H (in feet), v equalling the velocity at the standard height of fifty feet above ground:

$$V = v\sqrt{\frac{H + 72}{122}};$$

for one hundred feet above the ground,

$$V = v\sqrt{\frac{100 + 72}{122}},$$

or nearly $1.2v$; for twenty-five feet above the ground,

$$V = v\sqrt{\frac{25 + 72}{122}},$$

or nearly $0.9v$.

This range of twenty-five and one hundred feet, or of $1.2v$ and $0.9v$, constitutes the limits between which Mr. Stevenson's formula may be said to apply to windmill practice.

Professor E. D. Archibald ("Nature," No. 786) records experiments on the velocity of wind at different heights, by means of Biram's anemometers raised by kites. His results favor the formula $\frac{V}{v} = \left(\frac{H}{h}\right)^{\frac{1}{4}}$, while Mr. Stevenson's formula for heights above fifty feet is $\frac{V}{v} = \left(\frac{H}{h}\right)^{\frac{1}{2}}$.

High Wind Pressures. — Since windmills are, of course, preferably located where they are most freely exposed to the action of the wind, and since they must be made strong enough to withstand the pressure of the heaviest gales, information as to the highest velocities and pressures attained becomes of interest.

Mr. R. H. Scott,* then secretary, now president, of the Scottish Meteorological Society, estimates the velocity of the wind in the greatest hurricane at 90 miles an hour. Mr. C. B. Bender† states that the greatest progressive motion of an Atlantic hurricane having been observed to be 50 miles per hour, and no change of direction taking

---

* Quarterly Journal of the Meteorological Society, 1874, vol. ii. p. 109.

† Proceedings of the Institution of Civil Engineers, vol. lxix., session 1881–82.

place, it may be assumed that the velocity of the wind proper at its maximum was not more, or much more, than 100 miles per hour. Professor Jules Gaudard* quotes Rankine's statement, that about 55 pounds is the greatest wind pressure observed in England by anemometers or dynamometers, which is confirmed by the fall of chimneys and other buildings, and remarks that a pressure of 61 pounds on the square foot was recorded at Liverpool during the storm of the 7th of February, 1868, and of 71 pounds on the 27th of September, 1875. In regard to the highest wind pressures in France, M. Gaudard mentions the upsetting of a train between Narbonne and Perpignan, in December, 1867, as indicating a pressure between 30 pounds and 50 pounds, and other similar accidents with empty wagons on the same railway, in February, 1860, and January, 1863, as indicating a pressure of from 25 to 33 pounds. He continues: "No other part of France is exposed to such violent storms; nevertheless, in considering the stability of lighthouses, Fresnel allowed, for the possibility of wind pressures up to 56 pounds." Trautwine† mentions the breaking of a gauge at Girard College, Philadelphia, under a strain of 42 pounds per square foot; a tornado passing at the moment within a quarter of a mile. At the Central Park (New York) Observatory, in March, 1876, a wind of 28.5 pounds per square foot pressure was noted, and on Feb. 26, 1886, the greatest single gust was recorded, viz., 37.5 pounds per

---

* Proceedings of the Institution of Civil Engineers, vol. lxix., session 1881–82.

† The Civil Engineer's Pocket-Book.

square foot. On Mount Washington, N.H.,* 180 miles per hour has been observed. Mr. C. Shaler Smith† gives the following as the most violent storms of which he has personal record, having visited the tracks of many destructive storms as soon as possible after their occurrence: —

"*First*, East St. Louis, 1871: Locomotive overturned; maximum force required, 93 pounds per square foot.

"*Second*, St. Charles, 1877: Jail destroyed; force required, 84.3 pounds per square foot.

"*Third*, Marshfield, Mo., 1880: Brick mansion-house levelled; force required, 58 pounds per square foot.

"*Fourth*, Havre de Grace, Md., 1866: Ten spans of wooden Howe truss bridge, 250 feet each, blown over; force required, 27 pounds per square foot.

"*Fifth*, Decatur, Ala., 1870: Two spans of combination triangular truss blown over; force required, 26 pounds per square foot.

"*Sixth*, Meredosia, Ill., 1880: One span wooden Howe truss, 150 feet long, overturned; force, 24 pounds per foot.

"*Seventh*, Omaha, Neb., 1877: Two spans iron Post truss, 250 feet each, blown down; force required, $18\frac{7}{10}$ pounds per square foot."

Mr. Smith, in the same paper, also presents the following table of "the highest pressures registered in Great Britain, those recorded by Mr. Hartnup at the observatory at Bidstone:" —

---

* The Civil Engineer's Pocket-Book.

† Transactions American Society of Civil Engineers, vol. x., May, 1881.

TABLE IV.

DATE OF OBSERVATION.	Greatest Velocity, in Miles, between any Hour and the Next Hour Following.	Greatest Pressure in Pounds on the Square Foot.
27th December, 1868 . . .	92	80
13th October, 1870 . . .	82	65
9th March, 1871	79	90
27th September, 1875 . . .	81	70
23d November, 1877 . . .	80	64
28th December, 1879 . . .	59	38

While such high pressures as above recorded are exceptional, their enumeration may serve to point out the necessity of windmills being so constructed as not only to run under light winds, but also to possess sufficient strength to withstand heavy gales. And equal care, in this particular of strength to withstand heavy wind pressures, should be observed in the design and construction of windmill towers, which are at times of great height and comparatively small weight and base.

The conclusion that some of the pressures here noted are in all probability higher than have actually occurred, or do occur, is rendered plausible by reference to certain experiments detailed by Mr. Benjamin Baker, the engineer of the Forth Bridge, in a paper read by him before the British Association for the Advancement of Science, at Montreal, 1884. Mr. Baker, while engaged in the erection of the Forth Bridge, obtained simultaneously the records of wind pressures, as denoted by two small fixed pressure gauges $1\frac{1}{2}$ square feet area, by one large fixed gauge 300 square feet area, and by one revolving gauge or anemometer. Two years' records showed that "the effective pressure per square foot on a large and comparatively heavy board averages only about two-thirds of that indicated by an ordinary light anemometer." Furthermore, during the two years' record, there was noted but a single extraordinary and exceptionally high wind pressure, viz., 65 pounds, recorded by the revolving anemometer, "the index being at the end of its travel" at the time. Mr. Baker thereupon experimented with the gauge, and finally, in the presence of the inspecting officers of the Board of Trade, made it register 65 pounds by the sudden application of pressure not exceeding 20 pounds. In the language of Mr. Baker, "the momentum of the light index needle, and not that of the pressure plate which was bridled back, sufficed to cause the error." He therefore considers the record of 65 pounds as valueless so far as the specific maximum pressure obtained during the great storm is concerned, but of considerable value as evidence that the highest pressure, whatever it might have been, partook of the character of a smart jerk of too instantaneous duration to affect a structure of any size or weight. Mr. Baker concludes from his experiments that a larger board shows a smaller average pressure per square foot than a small one, that "the records of anemometers as at present obtained are utterly misleading and valueless for all practical purposes," and finally asserts that both Mr. Fowler and he, the engineers of the Forth Bridge, "are of opinion . . . that the assumed pressure of 56 pounds per square foot (recommended by a committee of the Board of Trade, after investigating the Tay Bridge disaster, as 'the maximum wind pressure to be provided for') is certainly in excess of any thing likely to be realized."

In view of all that has preceded, it is safe for the present to accept as a fact, in the design of exposed structures in America, England, and France, that an allowance for a wind pressure of 56 pounds per square foot will be ample; or, in other words, any structure exposed to the action of the wind should be so designed as to have adequate strength to successfully resist a wind pressure of 56 pounds per square foot.

CHAPTER II.

THE IMPULSE OF WIND ON WINDMILL BLADES.*

LET AB (Fig. 1) $= c$ represent the direction of motion and the velocity of the wind; the latter in feet per second. Let $BC = v$, perpendicular to AB, represent the direction of motion and the velocity of any element of the sail; the latter in feet per second. AB is $\perp$ to BC, because the direction of motion of each point of the surface of a windmill sail is perpendicular to that of the wind. Then, the wind moving in the direction AB with

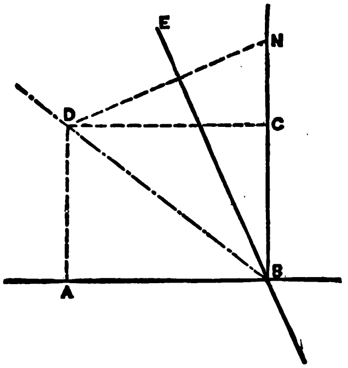

FIG. 1.

---

* The main portion of this chapter was originally presented by the author in "A Dissertation on the Theory and Practice of Windmills," Engineering and Mining Journal, Oct. 7 and 14, 1876.

a velocity c, and the element of the sail moving in a direction BC with a velocity v, the effect of these combined motions would be the same as if, the air being at rest, the sail moved in a direction BD with a velocity equal to $BD = (c^2 + v^2)^{\frac{1}{2}}$; or, as if the wind moved in a direction BD and struck the sail with a velocity $(c^2 + v^2)^{\frac{1}{2}}$, the sail being at rest.

Let the angle of impulse $< ABE = a$, let $< DBA = D$;

then $< DBE = a - D$,

$$\sin(a - D) = \sin a \cos D - \sin D \cos a.$$

$$AB = DB \cos DBA \quad \therefore \quad (c^2 + v^2)^{\frac{1}{2}} = c \sec D.$$

Let Q = quantity of wind, in cubic feet, flowing along per square foot per second;

d = density of wind;

$k = 0.93$ = co-efficient of friction of particles of air in motion (see p. 10);

S = surface of sail in square feet;

F = total pressure, in pounds, exerted by the wind normally to the surface.

$$F = \frac{SkQd}{g}(c^2 + v^2)^{\frac{1}{2}} \sin(a - D).$$

Substituting for Q its value c,

$$F = \frac{SKcd}{g} c \sec D (\sin a \cos D - \sin D \cos a);$$

$$F = \frac{SKcdc}{g}(\sin a - \tan D \cos a); \quad \tan D = \frac{v}{c};$$

$$\therefore \quad F = \frac{SKc^2d}{g}(\sin a - \frac{v}{c} \cos a).$$

To find what part of this pressure is useful in causing rotation, we resolve it into two components, one perpendicular to, and the other in the direction of BC. The former produces no beneficial effect; on the contrary, increases the pressure on the journals, and thus gives rise to a loss of effect by friction. The component in the direction BC, however, is that part of the pressure exerted which is entirely utilized, and represents the useful pressure on the sail. Let this pressure be represented by L. Then $L = F \cos a = \frac{SKc^2d}{g}\left(\sin a - \frac{v}{c}\cos a\right)\cos a$. This multiplied by v, the velocity of the sail in feet per second, gives for the theoretical mechanical effect of the windmill sail,

$$Lv = \frac{SKc^2d}{g}v\left(\sin a - \frac{v}{c}\cos a\right)\cos a. \qquad \text{(I.)}$$

Rankine, in his "Steam-Engine and other Prime Movers," edition 1874, p. 170, finds the following value for the theoretical mechanical effect due to the impulse of water on a flat vane:

$$Pv = \frac{DQvc \cos\zeta \cos\delta - v^2 \cos^2\delta}{g}.$$

When applied to windmills, it must be remembered that the direction of motion of each point of the sail is perpendicular to that of the wind, and the following substitutions can accordingly be made:

$$\delta = 90 - \zeta \qquad \therefore \quad \cos\delta = \sin\zeta;$$

and, since

$$a = \delta,\ a = 90 - \zeta,$$

$$\therefore\ \zeta = 90 - a \qquad \therefore\ \sin\zeta = \cos a,\quad \cos\zeta = \sin a.$$

$$Pv = \frac{DQcv \sin a \cos a - v^2 \cos^2 a}{g};$$

and, substituting L for P, S for the area of surface in square feet, and kcd for QD, "the weight of water flowing along the stream per square foot in a second,"

$$Lv = \frac{Skdc^2}{g}v\left(\sin a - \frac{v}{c}\cos a\right)\cos a,$$

which is the same as formula (I.), found directly as above.

Weisbach deduces (see "Weisbach's Mechanics," edited by Walter R. Johnson, p. 354) a value for the theoretical mechanical effect, of which the errors in solution can be best pointed out by quoting a passage: —

"If c = the velocity of the sail, Q = the quantity of wind striking on CD per second, γ = the density of the wind, and a = the angle CAH

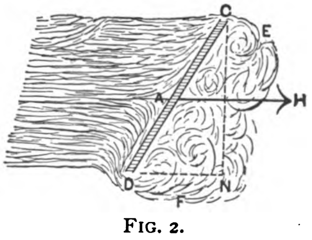

FIG. 2.

(Fig. 2) which the direction of the wind makes with CD, then, on the assumption that the plane moves away in the direction of the wind, the normal impulse of the wind on CD is $N = \frac{c - v}{g} \sin a Q\gamma$. Putting the section $CN = G$, then the quantity of wind Q coming into action is not Gc, but $G(c - v)$, as the sail moving with the velocity v leaves a space Gv behind it, which takes up a proportion of the quantity of wind Gc following it, equal to Gv, without undergoing any change of motion. Hence the normal impulse may be put $N = \frac{c - v}{g} \sin a (c - v) G\gamma = \frac{(c - v)^2}{g} \sin a G\gamma$; or, if $F =$ area of the element CD, and we substitute $F \sin a$ for G, then $N = \frac{(c - v)^2}{g} \sin^2 a F\gamma$. Besides this impulse on the face of CD, there is a counteraction on the back, inasmuch as one part of wind passing in the direction CE and DF, at the outside of the plane, takes an eddying motion to fill up the space behind, and consequently loses pressure corresponding to the relative velocity $(c - v) \sin a$, and represented by $\frac{(c - v)^2}{2g} \sin^2 a F\gamma$. If we combine these two effects, we get the normal impulse on the element of the sail."

On examination, it will be seen that the relative velocity of c and v, i.e., the fact that while the wind is moving with a velocity c, the sail moves with a velocity v, and therefore the wind actually strikes the surface with a velocity $(c - v)$, is erroneously allowed for, twice. Instead of the normal impulse N reading $N = \frac{(c - v)^2}{g} \sin a G\gamma$, it ought to read $N = \frac{(c - v)}{g} c \sin a \, G\gamma$: for, in deriving the expression $N = \frac{c - v}{g} \sin a$, the fact of the quantity of wind striking with a relative velocity $(c - v)$ is taken into account; and it is a mistake to forget this, and to make the same allowance for a second time. Besides this impulse, Weisbach adds another term, which, as is explained below, it is not correct to add. He assumes correctly that the wind rushing past the sail produces a partial vacuum behind it, and that this must be replaced by air. But is it not probable that the vacuum will be filled up by wind of original velocity, and that the wind which has lost part of its velocity by impact, only tends to fill up the empty space left by the wind of original undiminished velocity? It is certain, that as soon as one "line" of wind has struck the surface, it glides along the surface with diminished velocity, and simply forms a moving cushion on the sail, upon which the wind, with its original velocity, impinges. These facts seem to us to challenge the correctness of Weisbach's analysis.

From all of the above considerations, the author feels justified in adopting, as the THEORETICAL MECHANICAL EFFECT OF A WINDMILL SAIL, the expression

$$Lv = \frac{Skdc^2}{g}v\left(\sin a - \frac{v}{c}\cos a\right)\cos a; \qquad \text{(I.)}$$

and, in finding the actual mechanical effect of a vertical windmill, merely to make a deduction for loss of effect by friction of the shaft, considering a vacuum to be formed behind the sail, and therefore assuming the resistance of the air to be equal to nothing.

Best Angle of Impulse. — From formula (I.) it is apparent that the effect increases with the velocity c and with the area S, but it is not so evident how the angle of impulse affects the mechanical effect produced. That Lv may not be zero, $\sin a$ must be $> \frac{v}{c} \cos a$, and $\cos a$ must be $> O$. If $\sin a > \frac{v}{c} \cos a$, $\tan a > \frac{v}{c}$; and, as $\cos a > O$, therefore $a < 90°$. There must, therefore, be a value of a between the limit $\tan a > \frac{v}{c}$ and $a < 90°$, corresponding to a maximum value of Lv. To find the value, we solve the expression $\left(\sin a - \frac{v}{c}\cos a\right)\cos a$ for a maximum by the laws of calculus, and obtain

$$\tan^2 a - \frac{2v}{c}\tan a = 1, \qquad \text{(II.)}$$

$$\tan a = \frac{v}{c} + \sqrt{1 + \left(\frac{v}{c}\right)^2}. \qquad \text{(III.)}$$

In this formula, equation (2),

a represents the angle of impulse of the wind upon the windmill blade (or sail), at any point of the blade, for maximum effect;
v = the velocity of the blade (at such point), in feet per second;
c = the velocity of the wind, in feet per second.

The table on p. 35 has been computed on the basis of equation (III.), and sets forth the best "angle of weather," that is, the angle which an element of the blade or sail makes with the plane of motion of the blade. This angle, which we will term w, is the complement of the best angle of impulse; that is, $w = 90° - a$.

Let l = total length of blade from centre of windmill shaft to outer extremity of blade.
v_0 = velocity, in feet per second, of the blade or sail, at a distance $\frac{1}{7}l$ from the centre of the shaft.

Then, in the table, w_0 represents the best "angle of weather" at a distance $\frac{1}{7}l$ from the centre of the shaft, and $w_1, w_2, \ldots w_6$, represent the best "angles of weather" at distances $\frac{2}{7}l$, $\frac{3}{7}l$, . . . l, respectively, from the centre of the shaft.

TABLE V.

SHOWING THE BEST ANGLES OF "WEATHER" FOR WINDMILL BLADES FOR GIVEN RELATIVE VELOCITIES OF BLADES AND WIND.

$\frac{v_0}{c} =$	$w_0 =$	$w_1 =$	$w_2 =$	$w_3 =$	$w_4 =$	$w_5 =$	$w_6 =$
	° ′ ″	° ′ ″	° ′ ″	° ′ ″	° ′ ″	° ′ ″	° ′ ″
0.10	42 8 41	39 20 42	36 39 1	34 5 57	31 43 3	29 31 5	27 30 14
0.11	41 51 41	38 47 47	35 52 7	33 7 31	30 35 41	28 17 15	26 12 7
0.12	41 34 44	38 15 7	35 6 2	32 10 46	29 31 5	27 7 23	24 59 6
0.13	41 17 48	37 42 46	34 20 49	31 15 51	28 29 17	26 1 22	23 50 46
0.14	41 0 55	37 10 44	33 36 32	30 22 32	27 30 14	24 59 6	22 47 22
0.15	40 44 4	36 39 1	32 53 10	29 31 5	26 33 54	24 0 23	21 48 5
0.16	40 27 17	36 7 40	32 10 46	28 41 25	25 40 12	23 5 4	20 52 48
0.17	40 10 33	35 36 40	31 29 21	27 53 31	24 49 4	22 12 59	20 1 15
0.18	39 53 53	35 6 2	30 48 56	27 7 23	24 0 23	21 23 55	19 13 7
0.19	39 37 16	34 35 47	30 9 29	26 22 57	23 14 4	20 37 43	18 28 10
0.20	39 20 42	34 5 57	29 31 5	25 40 12	22 30 0	19 54 10	17 46 8
0.21	39 4 12	33 36 32	28 53 40	24 59 6	21 48 5	19 13 7	17 6 47
0.22	38 47 47	33 7 31	28 17 15	24 19 34	21 8 13	18 34 24	16 29 56
0.23	38 31 25	32 38 56	27 41 50	23 41 35	20 30 16	17 57 51	15 55 21
0.24	38 15 7	32 10 46	27 7 23	23 5 4	19 54 10	17 23 20	15 22 53
0.25	37 58 55	31 43 3	26 33 54	22 30 0	19 19 48	16 50 42	14 52 21
0.26	37 42 46	31 15 51	26 1 22	21 56 18	18 47 3	16 19 50	14 23 36
0.27	37 26 43	30 48 56	25 29 46	21 23 55	18 15 52	15 50 35	13 56 30
0.28	37 10 44	30 22 32	24 59 6	20 52 48	17 46 8	15 22 53	13 30 56
0.29	36 54 50	29 56 35	24 29 18	20 22 54	17 17 46	14 56 36	13 6 46
0.30	36 39 1	29 31 5	24 0 23	19 54 10	16 50 42	14 31 38	12 43 54
0.31	36 23 18	29 6 2	23 32 19	19 26 32	16 24 51	14 7 55	12 22 15
0.32	36 7 40	28 41 25	23 5 4	18 59 58	16 0 10	13 45 21	12 1 43
0.33	35 52 7	28 17 15	22 38 38	18 34 24	15 36 33	13 23 53	11 42 14
0.34	35 36 40	27 53 31	22 12 59	18 9 48	15 13 58	13 3 25	11 23 43
0.35	35 21 18	27 30 14	21 48 5	17 46 8	14 52 21	12 43 54	11 6 6
0.36	35 6 2	27 7 23	21 23 55	17 23 20	14 31 38	12 25 16	10 49 20
0.37	34 50 53	26 44 57	21 0 28	17 1 23	14 11 47	12 7 29	10 33 21
0.38	34 35 47	26 22 57	20 37 43	16 40 13	13 52 45	11 50 28	10 18 12
0.39	34 20 49	26 1 22	20 15 37	16 19 50	13 34 30	11 34 11	10 3 32
0.40	34 5 57	25 40 12	19 54 10	16 0 10	13 16 57	11 18 36	9 49 37
0.41	33 51 12	25 19 27	19 33 21	15 41 11	13 0 6	11 3 40	9 36 18
0.42	33 36 32	24 59 6	19 13 7	15 22 53	12 43 54	10 49 20	9 23 33
0.43	33 21 58	24 39 8	18 53 29	15 5 12	12 28 19	10 35 35	9 11 20
0.44	33 7 31	24 19 34	18 34 24	14 48 8	12 13 19	10 22 23	8 59 37
0.45	32 53 10	24 0 23	18 15 52	14 31 38	11 58 53	10 9 42	8 48 23
0.46	32 38 51	23 41 35	17 57 51	14 15 42	11 44 57	9 57 30	8 37 35
0.47	32 24 48	23 23 9	17 40 21	14 0 17	11 31 32	9 45 45	8 27 12
0.48	32 10 46	23 5 4	17 23 20	13 45 21	11 18 36	9 34 27	8 17 13
0.49	31 56 51	22 47 22	17 6 47	13 30 56	11 6 6	9 23 33	8 7 37
0.50	31 43 3	22 30 0	16 50 42	13 16 57	10 54 3	9 13 3	7 58 22

The diagram * (Fig. 3) shows graphically the best angles of impulse and of "weather," as determined above. The ordinates represent the best angles of weather and impulse, expressed in degrees; and the abscissas, the ratio of the velocity of the wind to the velocity of the windmill blades, $\frac{v}{c}$. Thus, assuming the velocity of the wind to be 31.416 feet per second, the diameter of the wheel to be 35 feet, and the number of revolutions per minute to be made to equal 30, the velocity of the wind wheel at

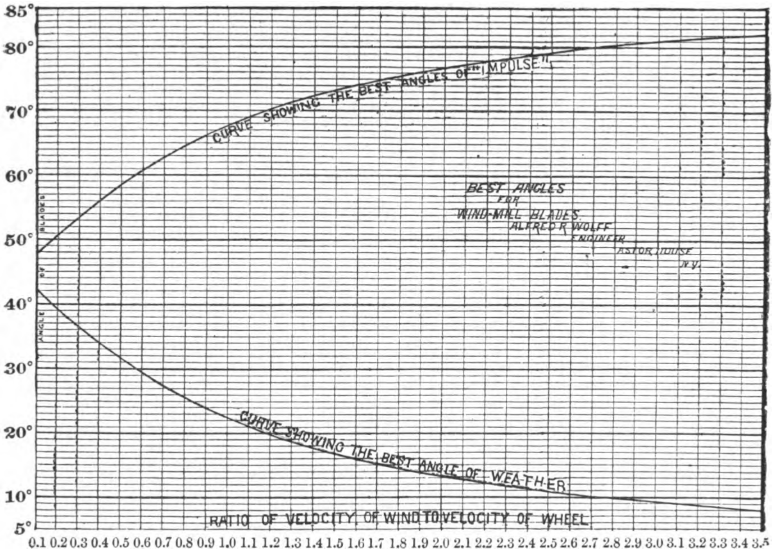

FIG. 3.

---

* Originally presented by the author in the Engineering and Mining Journal Oct. 26, 1878. See also Appleton's Cyclopædia of Mechanics, 1880; Transactions American Society Mechanical Engineers, 1882; American Engineer, April 22, 1882; Journal of the Franklin Institute, July, 1882; Engineering, Aug. 18, 1882; Proceedings Institution Civil Engineers, vol. lxx., session 1881–82, Part IV.

a point 2.5 feet from the centre of the shaft will be 7.854 feet per second; at 5 feet from the centre, 15.708; at 7.5 feet, 23.562; etc.: and the ratio of the velocity of the wind to the velocity of the sail, $\frac{v}{c}$, will at 2.5 feet from centre of shaft equal 0.25; at 5 feet, 0.50; at 7.5 feet, 0.75; etc. The best angle of weather equals, therefore, at a distance 2.5 feet from the centre of the shaft, 38°; at 5 feet from the centre, 32°; at 7.5 feet, 27°; etc.: and the best angle of impulse equals, at a distance of 2.5 feet from the centre of the shaft, 52°; at 5 feet from the centre, 58°; at 7.5 feet, 63°; etc.

Since there is no difference in the amount of effect caused by the blades moving against the air, and that caused by the air (or wind) striking upon the blades (assuming the same velocity in both cases), the angles set forth in the table and diagram will be found to be those of maximum efficiency for ventilating purposes as well as for windmills.

Theoretical Mechanical Effect of Windmill of Shape of Sail for Maximum Effect.

Having given the velocity of the wind and the number of revolutions and the dimensions of the sail, the shape of the surface producing the maximum effect, and the corresponding theoretical effect, can be readily found.

Let c = velocity of the wind, in feet per second;

n = number of revolutions of the windmill per minute;

$b_0, b_1, b_2, \ldots b_x$, be the breadth of the sail at distances $l_0, l_1, l_2, l_3, \ldots l$, respectively, from the axis of the shaft;

Let l_0 = distance from axis of the shaft to the beginning of sail proper;
l = distance from axis of the shaft to the extremity of sail proper;
$v_0, v_1, v_2, v_3, \ldots v_x$, be the velocity of the sail, in feet per second, at distances $l_0, l_1, l_2, l_3, \ldots l$, respectively, from the axis of the shaft;
$a_0, a_1, a_2, a_3, \ldots a_x$, be the angles of impulse for maximum effect at distances $l_0, l_1, l_2, l_3, \ldots l$, respectively, from the axis of the shaft.

Then will

$$v_0 = 0.10472 l_0 n,$$
$$v_1 = 0.10472 l_1 n,$$
$$v_2 = 0.10472 l_2 n,$$
$$\cdot \quad \cdot \quad \cdot \quad \cdot$$
$$v_x = 0.10472 l n;$$

and, from (III.),

$$\tan a_0 = \frac{0.10472 l_0 n}{c} + \sqrt{1 + \left(\frac{0.10472 l_0 n}{c}\right)^2},$$
$$\tan a_1 = \frac{0.10472 l_1 n}{c} + \sqrt{1 + \left(\frac{0.10472 l_1 n}{c}\right)^2},$$
$$\tan a_2 = \frac{0.10472 l_2 n}{c} + \sqrt{1 + \left(\frac{0.10472 l_2 n}{c}\right)^2},$$
$$\cdot \quad \cdot \quad \cdot \quad \cdot \quad \cdot \quad \cdot \quad \cdot \quad \cdot \quad \cdot$$
$$\tan a_x = \frac{0.10472 l n}{c} + \sqrt{1 + \left(\frac{0.10472 l n}{c}\right)^2}.$$

From these equations can be found the angle which the direction of the wind must make with the sail at any point on its surface, in order to give the best effect. As the shaft of a vertical windmill is parallel to the direction of motion of the wind, these angles represent also those which the elements of the surface at distances $l_0, l_1, l_2, \ldots l$, make respectively with the axis of the shaft; or, the elements of the sail must make the complements of these angles (angles of weather) with the plane of motion of the sail. Having, therefore, found the angles of impulse, as indicated above, the shape of sail for maximum effect is determined. The theoretical effect for this sail is computed by application of formula (I.),

$$Lv = \frac{SKc^2d}{g}v\left(\sin a - \frac{v}{c}\cos a\right)\cos a.$$

From (II.) we have

$$v = \frac{c}{2}\frac{\tan^2 a - 1}{\tan a} = \frac{c}{2}(\tan a - \cot a).$$

Substituting this value of v in (I.),

$$Lv = \frac{SKdc^3}{2g}(\tan a - \cot a)\left(\sin a - \frac{\tan a - \cot a}{2}\cos a\right)\cos a,$$

$$Lv = \frac{SKdc^3}{2g}\left(\tan a \sin a \cos a - \cot a \sin a \cos a \right.$$
$$\left. - \frac{\tan a (\tan a - \cot a)\cos^2 a}{2} + \frac{\cot a (\tan a - \cot a)\cos^2 a}{2}\right),$$

$$Lv = \frac{SKdc^3}{2g}\left(\sin^2 a - \cos^2 a - \frac{\tan^2 a \cos^2 a}{2}\right.$$
$$\left. + \frac{\tan a \cot a \cos^2 a}{2} + \frac{\cot a \tan a \cos^2 a}{2} - \frac{\cot^2 a \cos^2 a}{2}\right),$$

$$Lv = \frac{SKdc^3}{2g}\left(\sin^2 a - \cos^2 a - \frac{\sin^2 a}{2} + \frac{\cos^2 a}{2} + \frac{\cos^2 a}{2} - \frac{\cos^4 a}{2\sin^2 a}\right),$$

$$Lv = \frac{SKdc^3}{2g}\left(\frac{\sin^2 a}{2} - \frac{\cos^4 a}{2\sin^2 a}\right) = \frac{SKdc^3}{4g}\left(\frac{\sin^4 a - \cos^4 a}{\sin^2 a}\right),$$

$$Lv = \frac{SKdc^3}{4g}\left(\frac{(\sin^2 a + \cos^2 a)(\sin^2 a - \cos^2 a)}{\sin^2 a}\right)$$
$$= \frac{SKdc^3}{4g}\left(\frac{2\sin^2 a - 1}{\sin^2 a}\right).$$

$$S = (l - l_0)B \quad (B = \text{mean breadth of sail}),$$

and

$$Lv = \frac{(l - l_0)Kdc^3}{4g} B \frac{2\sin^2 a - 1}{\sin^2 a}.$$

$$\frac{B(2\sin^2 a - 1)}{\sin^2 a} = \text{the mean of}$$

$$\left(\frac{2\sin^2 a_0 - 1}{\sin^2 a_0} b_0, \frac{2\sin^2 a_1 - 1}{\sin^2 a_1} b_1, \ldots \frac{2\sin^2 a_x - 1}{\sin^2 a_x} b_x\right).$$

Therefore the theoretical mechanical effect of the windmill of shape of sail for maximum effect (when N = number of sails or blades of windmill) equals

$$N\frac{(l - l_0)Kdc^3}{4g} \times \text{mean of}$$

$$\frac{2\sin^2 a_0 - 1}{\sin^2 a_0} b_0, \frac{2\sin^2 a_1 - 1}{\sin^2 a_1} b_0, \ldots \frac{2\sin^2 a_x - 1}{\sin^2 a_x} b_x. \quad \text{(IV.)}$$

Theoretical Mechanical Effect of Windmill with Plane Sails.

If the sail is a plane, the angle of impulse a will be a constant quantity; and hence we find from (I.), for the theoretical mechanical effect of a windmill with plane sails, the value

$$\frac{(l - l_0)kc^2dN}{g} \times \text{mean of} \left[v_0\left(\sin a - \frac{v_0}{c}\cos a\right)b_0 \cos a \right.$$

$$\left. \ldots v_x\left(\sin a - \frac{v_x}{c}\cos a\right)b_x \cos a\right]. \quad \text{(V.)}$$

Loss of Effect by Friction of the Shaft.

In calculating the amount of friction, the whole weight of the wheel is taken as bearing upon the neck gudgeon, and the pressure upon the lower bearing is not considered. This certainly seems, at first sight, like finding an excess of friction, part of the weight evidently resting upon the lower bearing; but it must be remembered, first, that this excess is compensated by the fact that no attention is paid to the axial component of the pressure of the wind, and, secondly, by the fact of the considerably greater diameter of the upper than of the lower bearing.

Let W = weight of wind wheel in pounds,
f[*] = co-efficient of friction of shaft and bearings,
n = number of revolutions of the windmill per minute,
D = diameter of upper bearing in feet.

The work expended in overcoming the friction will equal the amount of friction into the velocity with which it is overcome. This velocity in feet per second $= 0.05236nD$, and the loss of effect by friction $= fW \times 0.05236nD$, which, subtracted from (IV.), makes

The actual mechanical effect of a windmill, with sails of best angles of weather, equal to

$$\frac{(l - l_0)kdc^3}{4g} \times \text{mean of} \left(\frac{2\sin^2 a_0 - 1}{\sin^2 a_0} b_0 \;\ldots\; \frac{2\sin^2 a_x - 1}{\sin^2 a_x} b_x \right) - fW \times 0.05236nD. \quad \text{(VI.)}$$

---

[*] For the co-efficient of friction in shafts, see chap. x., p. 150.

Subtracting the loss of effect by friction of the shaft from (V.), we have, for the actual mechanical effect of a windmill with plane sails, the value

$$\frac{(l-l_0)\,kc^2dN}{g} \times \text{mean of} \left[v_0 \left(\sin a - \frac{v^{o}}{c} \cos a \right) b_0 \cos a \right.$$

$$\left. \ldots\, v_x \left(\sin a - \frac{v_x}{c} \cos a \right) b_x \cos a \right] - fW \times 0.05236nD. \quad \text{(VI.)}$$

Proof of Accuracy of Formula (IV.).

It is always well to put a formula, however evident it may appear theoretically, to a practical test, to ascertain its truth. The only practical test which can be applied in this case is a comparison of the effect produced, given as the result of Coulomb's* experiments, and the effect as deduced from the formulæ. Coulomb found as the total effect, including friction of the shaft, 1,000 pounds raised 253 *pieds de roi* = 269.6 English feet for a windmill of the following dimensions and given conditions: Length of sail = l = 33 French feet = 35.171 English feet; distance from axis of shaft to beginning of sail = l_0 = 6 French feet = 6.395 English feet; breadth of sail = about 6.2 French feet = 6.6195 English feet; number of revolutions per minute = n = 13; number of sails = N = 4; velocity of wind = about 20.5 French feet per second = 21.982 (or about 22) English feet per second; angle of impulse at l_0 = nearly 60°, angle at l = 78°. The intermediate angles are not given; but, judging by

---

* See p. 128.

the agreement of the angles of impulse at l_0 and l_1, the windmill can be considered as having sails very nearly of shape for maximum effect.

Let $l_0 = 6.395$ ft. Then $v_0 = 8.70590$ ft. per sec., $\tan a_0 = 1.48861, \therefore a_0 = 56^\circ\ 6'30''$.[*]
$l_1 = 11.171$ “ “ $v_1 = 15.23498$ “ $\tan a_1 = 1.94388, \therefore a_1 = 62^\circ 46'38''$.
$l_2 = 15.987$ “ “ $v_2 = 21.76406$ “ $\tan a_2 = 2.45017, \therefore a_2 = 67^\circ 45'26''$.
$l_3 = 20.783$ “ “ $v_3 = 28.29314$ “ $\tan a_3 = 3.00713, \therefore a_3 = 71^\circ 36'20''$.
$l_4 = 25.579$ “ “ $v_4 = 34.82222$ “ $\tan a_4 = 3.54901, \therefore a_4 = 74^\circ 15'50''$.
$l_5 = 30.375$ “ “ $v_5 = 41.35130$ “ $\tan a_5 = 4.12235, \therefore a_5 = 76^\circ 21'54''$.
$l\ = 35.171$ “ “ $v_x = 47.88038$ “ $\tan a_x = 4.70488, \therefore a_x = 78^\circ\ 0'\ 2''$.

$$\frac{(2\sin^2 56^\circ 6'30'' - 1)}{\sin^2 56^\circ 6'30''} = 0.54880, \qquad \frac{(2\sin^2 71^\circ 36'20'' - 1)}{\sin^2 71^\circ 36'20''} = 0.88941,$$

$$\frac{(2\sin^2 62^\circ 46'38'' - 1)}{\sin^2 62^\circ 46'38''} = 0.71747, \qquad \frac{(2\sin^2 74^\circ 15'50'' - 1)}{\sin^2 74^\circ 15'50''} = 0.92060,$$

$$\frac{(2\sin^2 67^\circ 45'26'' - 1)}{\sin^2 67^\circ 45'26''} = 0.83275, \qquad \frac{(2\sin^2 76^\circ 21'54'' - 1)}{\sin^2 76^\circ 21'54''} = 0.94115,$$

$$\frac{(2\sin^2 78^\circ 0'2'' - 1)}{\sin^2 78^\circ 0'2''} = 0.95483.$$

the mean value of which, according to Simpson's rule, = 0.84458. Substituting the above values in equation (IV.),

$$Lv = \frac{4 \times 6.6195 \times 28.776}{4} \times \frac{0.93 \times dc^2}{g} \times 22 \times 0.84458;$$

and assuming the average temperature at time of observation = 50° F., and the barometric pressure = 2088.5 (at 32° F. this = 2116.5), $\frac{dc^2}{g} = 1.2$, and $Lv = 6.6195 \times 28.776 \times 0.93 \times 1.2 \times 22 \times 0.84458 = 3949.9$ foot-pounds per second = 236,994 foot-pounds per minute = 1,000 pounds raised 236.994 feet per minute. It will be noticed that the effect as here calculated from the formula is

---

[*] These angles can be obtained directly from diagram, Fig. 3, or Table V., without first finding value of tan a, as has here been done as a mere matter of interest.

smaller than the actual effect; while, on account of the better angles of impulse, it should be somewhat larger. But, if the barometric pressure had equalled 2349.81 (at 32° this = 2381.06), then $\frac{dc^2}{g} = 1.35$, and $Lv = 6.6195 \times 28.776 \times 0.93 \times 1.35 \times 0.84458 \times 60 = 266{,}618$ foot-pounds per minute = 1,000 pounds raised 266.618 feet per minute; or, if instead of $c = 22$ English feet, the velocity had been 23 English feet per second, $\frac{dc^2}{g} \times c = \frac{39.669771}{\frac{15903.20}{529} - 0.018743} \times 23 = 30.36$ (the barometric pressure being assumed = 2088.5), $Lv = 6.6195 \times 28.776 \times 0.93 \times 30.36 \times 0.84458 = 4541.4$ foot-pounds per second = 1,000 foot-pounds raised 272.486 English feet per minute, which is slightly above the effect found by experiment. Now, the barometric pressure at the time of the observations might have been 2381.6 pounds per square foot, instead of 2088.5, no record of the same having been kept. Also, judging from the method by which the velocity of the wind was ascertained,* an error of one foot per second was very easily possible; and it is even probable that the velocity of wind found differed somewhat from the velocity with which the wind struck the mill, no anemometer having been employed. However, the close approximation between the results as determined by calculation and by experiment is immediately discernible, and various formulæ extant tested by the writer in the same manner failed to give nearly as satisfactory results.

---

* See p. 130.

CHAPTER III.

THE EARLY HISTORY OF WINDMILLS.

ALL of paramount interest pertaining to the early history of windmills has been collated by Professor John Beckmann in his "History of Inventions and Discoveries." The work of this distinguished "public professor of economy in the University of Göttingen" has, as we have found by careful search, been exhaustive; and it is a pleasure, therefore, to acknowledge our indebtedness to this valuable treatise, or more directly to the translation by Mr. William Johnston, London, 1817, for all the facts detailed in this chapter.

In vol. i., under the heading "Corn Mills," p. 247, we read, —

> "The intrusting of that violent element water to support and drive mills constructed with great art, displayed no little share of boldness; but it was still more adventurous to employ the no less violent but much more untractable and always changeable wind for the same purpose. Though the strength and direction of the wind cannot be any way altered, it has, however, been found possible to devise means by which a building can be moved in such a manner that it shall be exposed to neither more nor less wind than is necessary, let it come from what quarter it may.
>
> "It is very improbable — or, much rather, false — that the Romans

had windmills; though Pomponius Sabinus affirms so, but without any proof.* Vitruvius,† where he speaks of all forces, mentions also the wind; but he does not say a word of windmills. Nor are they noticed either by Seneca ‡ or Chrysostom,§ who have both spoken of the advantages of the wind. I consider as false also the account given by an old Bohemian annalist,‖ who says that before the year 718 there were none but windmills in Bohemia, and that water-mills were then introduced for the first time. I am of the opinion that the author meant to have written hand and cattle mills instead of windmills.

"It has been often asserted that these mills were first invented in the East, and introduced into Europe by the Crusaders; but this also is improbable, for mills of this kind are not at all, or very seldom, found in the East. There are none of them in Persia, Palestine, or Arabia; and even water-mills are there uncommon, and constructed on a small scale.

"Besides, we find windmills before the Crusades, or at least at the time when they were first undertaken. It is probable that these buildings may have been made known to a great part of Europe, and particularly in France and England,¶ by those who returned from these expeditions; but it does not thence follow that they were invented in the East.**

---

* See Pomponius Sabinus, *ut supra.*

† Lib. ix. c. 9, lib. xc. 1, 13.

‡ Natur. Quæst., lib. v. c. 18.

§ Chrysost. in psalm cxxxiv. p. 362.

‖ "At the same period [718], one named Halek, the son of Uladi the Weak, built close to the city an ingenious mill which was driven by water. It was visited by many Bohemians, in whom it excited much wonder, and who, taking it as a model, built others of the like kind here and there on the rivers; for before that time all the Bohemians' mills were windmills erected on mountains."

¶ See De la Mare, Traité de la Police, etc., *ut supra;* Description du Duché de Burgogne, Dijon, 1775, 8vo, i. p. 163; Dictionnaire des Origines, par D'Origny, v. p. 184. The last work has an attractive title; but it is the worst of its kind, written without correctness or judgment, and without giving authorities.

** "There are no windmills at Ispahan nor in any part of Persia. The mills are all driven by water, by the hand, or by cattle" (*Voyages de Chardin,* Rouen, "The Crusaders perhaps saw such mills in the course of their travels through Europe; very probably in Germany, which is the original country of most large machines. In like manner, the knowledge of several useful things has been introduced into Germany by soldiers who have returned from different wars; as the English and French, after their return from the last war, made known in their respective countries many of our useful implements of husbandry, such as our straw-chopper, scythe, etc.

"Mabillon mentions a diploma of the year 1105, in which a convent in France is allowed to erect water and wind mills, *molendina ad ventum.** In the year 1143, there was in Northamptonshire an abbey, situated in a wood, which in the course of a hundred and eighty years was entirely destroyed. One cause of the destruction was said to be, that in the whole neighborhood there was no house, wind or water mill built, for which timber was not taken from this wood.†

1723, 8vo, viii. p. 221). "The Arabs have no windmills: these are used in the East, only in places where no streams are to be found. And in most parts the people make use of hand-mills. Those which I saw on Mount Lebanon and Mount Carmel had a great resemblance to those which are found in many parts of Italy. They are exceedingly simple, and cost very little. The millstone and the wheel are fastened to the same axis. The wheel, if it can be so called, consists of eight hollow boards, shaped like a shovel, placed across the axis. When the water falls with violence upon these boards, it turns them round, and puts in motion the millstone, over which the corn is poured" (D'ARVIEUX: *Merkwürdige Nachrichten von seinen Reisen*, Part III., Copenhagen and Leipsic, 1754, 8vo, p. 201). "I did not see either water or wind mill in all Arabia. I, however, found an oil-press at Tehama, which was driven by oxen, and thence suppose that the Arabs have corn-mills of the like kind" (NIEBUHR: *Beschreibung von Arabien*, p. 217).

* "Iisdem etiam facultatem concessit constituendi domos, stagna, molendina ad aquam et ventum, in episcopatu Ebroicensi, Constantiensi, et Bajocensi, ad augendos monasterii proventus" (MABILLON: *Annales Ordanis S. Benedicti*, tom. v., Lut., Paris, 1713, fol. p. 474).

† "Præterea non fuit in patria, aula, camera, orreum, molendinum venticium sive aquaticum alicujus valoris plantata sine adminiculo aliquo boscorum Sanctæ Mariæ de Pipewalla [so the wood was called] quot virgæ molendinorum venticiorum dabauntur in temporibus di versorum abbatum nemo novit, nisi Deus. Caussa

"In the twelfth century, when these mills began to be more common, a dispute arose whether the tithes of them belonged to the clergy; and Pope Celestine III. determined the question in favor of the Church.* In the year 1332 one Bartolommeo Verde proposed to the Venetians to build a windmill. When his plan had been examined, a piece of ground was assigned to him, which he was to retain in case his undertaking should succeed within a time specified.† In the year 1393 the city of Spires caused a windmill to be erected, and sent to the Netherlands for a person acquainted with the method of grinding by it.‡

"A windmill was also constructed at Frankfort in 1442, but I do not know whether there had not been some there before.§

"To turn the mill to the wind, two methods have been invented. The whole building is constructed in such a manner as to turn on a post below, or the roof alone, together with the axle-tree; and the wings are movable. Mills of the former kind are called German mills; those of the latter, Dutch. They are both moved round, either by a wheel and pinion within, or by a long lever without.‖ I am inclined to believe that the German mills are older than the Dutch; for the earliest descrip-

---

tertia destructionis boscorum fruit in constructione et emendatione domorum infra abbathiam et extra utpote grangus, orreis, bercariis molendinis aquaticis et venticiis per vices. [The letter of donation, which appears also to be twelfth century, may be found in the same collection, vol. ii., p. 459. In it occurs the expression, *molendinum ventritricum*. In a character, also, in vol. iii., p. 107, we read of *molendinum ventorium*]" (*Monasticon Anglicanum sive Pandictæ Cœnobiorum*, edit. sec. London, 1682, fol. i. p. 816).

* De reditibus molendini ad ventum solvendæ sunt decimæ, Decretal Greg., lib. iii. tit. 30, c. 23.

† Gir. Zanetti, Dell' Origine di alcune arte appresso di Veneziani, Venez., 1758, 4to, p. 74; Pro faciendo unum molendinum a vento; Le Bret, Geschichte von Venedig, II. i. p. 233.

‡ Lehmann's Chronica der Stadt Speyger, Frankf., 1662, 4to, p. 847: "Sent to the Netherlands for a miller who could grind with the windmill."

§ Lersner, Frankf. Chronik, ii. p. 22.

‖ Description and figures of both kinds may be found in Leupold's Theatrum Machinarum Generale, Leipsic, 1724, fol. p. 101, tab. 41–43.

tions which I can remember, speak only of the former. Cardan,* in whose times windmills were very common, both in France and Italy, makes, however, no mention of the latter; and the Dutch themselves affirm, that the mode of building with a movable roof was first found out by a Fleming in the middle of the sixteenth century.†

"Those mills by which, in Holland, the water is drawn up and thrown off from the land, one of which was built at Alkmaar in 1408, another at Schoonhoven in 1450, and a third in Enkhuysen in 1452, were at first driven by horses, and afterwards by wind. But as these mills were immovable, and could work only when the wind was in one quarter, they were afterwards placed, not on the ground, but on a float which could be moved round in such a manner that the mill should catch every wind.‡ This method gave rise, perhaps, to the invention of movable mills."

An interesting episode relative to the use of wind-

---

* "Nor can I pass over in silence what is so wonderful, that, before I saw it, I could neither believe nor relate it, though commonly talked of, without incurring the imputation of credulity. But a thirst for science overcomes bashfulness. In many parts of Italy, therefore, and here and there in France, there are mills which are turned round by the wind" (*De Rerum Varietate*, lib. i. cap. 10, in the edition of all his works, Lugduni, 1663, fol. vol. iii. p. 26).

† This account I found in De koophandel van Amsterdam, door Le Long, Amsterdam, 1727, 2 vols. 8vo, 11, p. 584: "*De beweegelyke kap, om de moolens op all windens te zettens, is erst in't midden van de xvide eeuw door een Vlaaming uytgevonden*" ("The movable top for turning the mill round to every wind was first found in the middle of the sixteenth century by a Fleming"). We read there that this is remarked by John Adrian Leegwater; but of this man I know nothing more than what is related of him in the above work, that he was celebrated on account of various inventions, and died in 1650, in the seventy-fifth year of his age. See also Beschryving der Stadt Delft door verscheide Liefhebbers en Kenners der Nederlandsche oudhedin. Te Delft, 1729, fol. p. 623.

‡ "De molens hadden doen (toen) vaste kappen zoo datze maar met eene wind malen konde, waarom men op zekere plaats, om dit ongeval voor te kommen, een molen op een groot vlot neder zette dat men dan naar din wind draide." See the History of the city of Delft, above quoted.

mills, of special interest to the school of political economists, who hold that any of the free forces of nature, such as air, water, land, and the like, should, in their natural, unimproved offering, be the equal property of all, is noted by Beckmann, on p. 268, as follows: —

> "The avarice of landholders, favored by the meanness and injustice of governments, and by the weakness of the people, extended this regality not only over all streams, but over the air and the windmills. The oldest example of this with which I am at present acquainted is related by Jargow.*
>
> "In the end of the fourteenth century, the monks of the celebrated but long since destroyed monastery of Augustines at Windsheim, in the province of Overyssel, were desirous of erecting a windmill not far from Zwoll; but a neighboring lord endeavored to prevent them, declaring that the wind in the district belonged to him.
>
> "The monks, unwilling to give up their point, had recourse to the Bishop of Utrecht, under whose jurisdiction the province had continued since the tenth century. The bishop, highly incensed against the pretender who wished to usurp his authority, affirmed that the wind of the whole province belonged to him only, and in 1391 gave the convent express permission to build a windmill wherever they thought proper.†

---

* Jargow, Einleitung in die Lehre von den Regalien, Rostock, 1757, 4to, p. 494.

† "As our monastery had not a mill to grind corn, they resolved to build a new one. When the lord of Woerst heard this, he did every thing in his power to prevent it, saying that the wind in Zealand belonged to him, and no one ought to build a mill there without his consent. The matter was therefore referred to the Bishop of Utrecht, who, as soon as the affair was made known to him, replied in a violent passion that no one had power over the wind within his diocese but himself and the church at Utrecht; and he immediately granted full power, by letters-patent, dated 1391, to the convent at Windsheim, to build for themselves and their successors a good windmill in any place which they might find convenient" (*Chronicon Canonicorum regularium ordinis Augustini, capituli Windesemensis, auctore Joh. Buschio*, Antverpiæ, 1621, 8vo, p. 73).

"In like manner, the city of Haerlem obtained leave from Albert, count palatine of the Rhine, to build a windmill, in the year 1394." *

---

* "Albertus notum facimus quod donavimus donamusque civitati nostræ Harlemianæ ventum molarium a parte australi civitatis nostræ praiscriptæ hemistadium versus inter Pacis fossam et sparnam." (THEOD. SCHREVELII : *Harlemum Lugduni*, Batavorum, 1647, 4to, p. 181).

CHAPTER IV.

EUROPEAN WINDMILLS.

EUROPEAN windmills have been divided into two general classes, according to the inclination of the shaft: —

1. *Horizontal Mills*, in which the sails were so placed as to turn, by the impulse of the wind, in a horizontal plane, and hence about an axis exactly vertical; and

2. *Vertical Mills*, in which the sails turn in a nearly vertical plane, i.e., about an axis nearly horizontal.

Horizontal Mills.

On account of the many disadvantages connected with the horizontal mills, their use has been exceedingly limited. They have been employed only in situations in which the height of the vertical sails proved a serious objection, — a rare and extraordinary occurrence. This class of mill demands, therefore, but little notice on our part. Its general construction may be outlined to this effect: Six or more sails, consisting of plane boards, are set upright upon horizontal arms which rest upon a tower, and which are attached to a vertical shaft passing through the centre of the tower. The sails, which are fixed in position, are set obliquely to the direction in which the wind will strike them. Outside of the whole is placed a screen or cylindrical arrangement of board intended to revolve, these boards being set obliquely, and in planes lying in opposite course to those of the sails. As a result, from whatever direction the wind may blow against the tower, it is always admitted by the outer boards to act on the sails most freely in that half of the side it strikes on, from which the sails are turning away; and it is partly, though by no means entirely, broken from the sails which, in the other quadrant of the side, are approaching the middle line. Fairbairn* reprints from the columns of the "Practical Mechanic's Magazine" the following account of a horizontal windmill at Eupatoria in Crimea, as it appeared when seen by the writer of the article during the period of the Crimean War. This description will well answer for the whole type. It reads: —

> "Around the town of Eupatoria, in the Crimea, there appeared to be nearly two hundred windmills, chiefly employed in grinding corn; and all which were in a workable state were of the vertical construction, and only one horizontal mill, which seemed to have been out of use for at least a quarter of a century. The tower of this mill was built of brickwork, about twenty feet diameter at the base, and about seventeen feet at the top, and twenty feet high. The revolving wings, which consisted of six sets of arms, appeared to be about twenty feet diameter and about six feet broad, fitted with vertical shutters which were

---

* Treatise on Mills and Millwork, by Sir William Fairbairn.

movable on pivots passing through the arms, the shutters being about twelve inches wide by five or six feet high; and the pivots were fixed at about one-third of the breadth from the edge of the shutters, in order that the wind might open and shut them at the proper time during the revolution of the wings. About one-third of the circumference of the wings was surrounded by a segmental screen, to shelter the arms and shutters while moving up against the wind; and the screen seemed to have been hauled round with ropes, in order to suit the direction of the wind."

The objections to the employment of the horizontal windmill, which virtually debarred, and still debar it from use in competition with the vertical mill, are, first, that only one or two sails can be effectually acted upon at the same moment; and secondly, that the sails move in a medium of nearly the same density as that by which they are impelled, and that therefore great resistance is offered to those sails which approach the middle. Smeaton* puts it thus: —

"Little more than one sail can be acting at once, whereas in the common windmill all the four act together; and therefore, supposing each vane of a horizontal windmill of the same dimensions as each vane of the vertical, it is manifest that the power of a vertical mill with four sails will be four times greater than the power of the horizontal one, let its number of vanes be what it will. This disadvantage arises from the nature of things; but, if we consider the further disadvantage that arises from the difficulty of getting the sails back against the wind, etc., we need not wonder if this kind of mill is in reality found to have not above one-eighth to one-tenth of the power of the common sort, as has appeared in some attempts of this kind."

---

* Philosophical Transactions, 1755 to 1763.

While it is true, that, with a like area of sails, the power of the horizontal is always much less than that of the vertical mill, Smeaton's estimate of one to eight or one to ten is too unfavorable, inasmuch as he overlooked, as Sir David Brewster first showed, the loss in vertical mills of one component of the wind's pressure.* The ratio of one to four, given by Sir David Brewster, is, however, about the correct figure, and presents a sufficient explanation of the limited use to which horizontal windmills have been put in the past, and a sufficient cause why they should not be employed at the present time, if the question of economy of motive power at all enters the problem as a leading consideration.

Vertical Mills.

In vertical mills of the European type, the tower or building which supported the windmill proper was either of wood or stone: if of stone, the tower was commonly in the form of a frustum of a cone. The principal parts of the mill proper are: —

1. An axle or shaft, either of wood or iron, in the top of the building, inclined to the horizontal at an angle of from ten to fifteen degrees, as observation has shown that the impulse of the wind is usually exerted in lines descending at such angles.

2. The sails attached to near the outer extremity of the shaft, and turning in nearly a vertical plane. The

---

* See p. 30.

planes of these sails are placed obliquely to the plane of revolution; so that, when the wind blows in the direction of the axle, it impinges upon their surface obliquely, and thus the effort of the sail to recede from the wind causes it to turn upon its axle. These sails consist of wooden frames (arms and cross-bars), with canvas covering the lattice or frame work. If four in number, as is the rule, though five and six have been employed, the sails are fixed in position at right angles to each other. They are usually constructed from thirty to forty feet in length, though fifty feet has often been exceeded.

3. A large toothed wheel upon the horizontal axle, the teeth of which engage with those of a pinion upon

4. A vertical shaft from which motion is imparted to the machinery.

It will be understood that the horizontal shaft is supported at its inner end near the centre of the base of the dome or cone surmounting the mill, while its opposite extremity passes through a perforation in one side of the dome, where it has its main support, and projects far enough to receive the ends of the long timbers or arms of the sail. The pivot at the lower or inner end of the shaft takes up but a small part of the weight and counter-pressure.

The axle is constructed of some hard wood, like oak, or of wrought-iron with cast-iron flanges of large diameter keyed on the front, which are furnished with recesses for receiving and holding the arms of the sails.

Windmill Sails

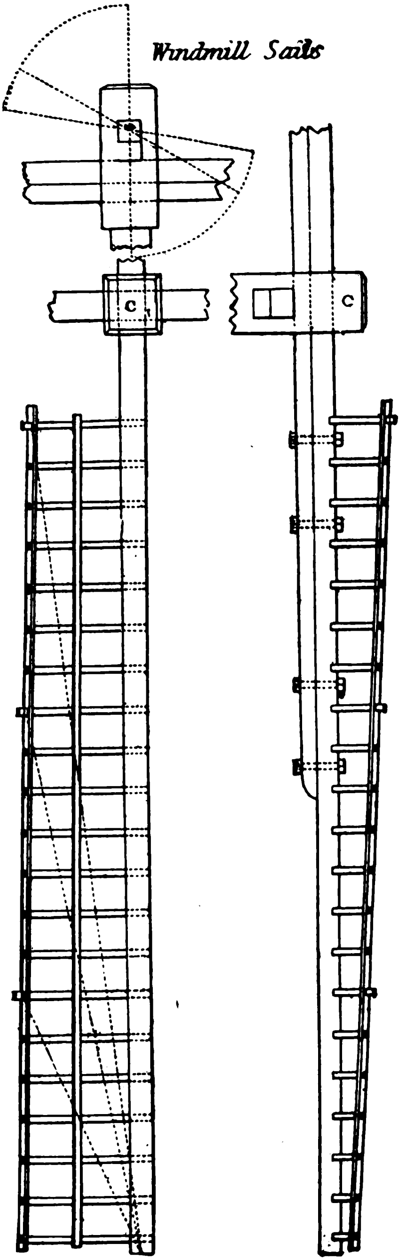

FIG. 4.

The latter must be proclaimed as the better practice; since, the diameter of the neck of the wooden shaft being from one and a half to two feet, an iron one substituted in its place need not be more than six to nine inches, and thus the loss by friction * is materially decreased.

The sails are made plane, concave, or warped. The latter, the most effective, have been in greatest use; and the angles employed in the Dutch type of mill † have, on the whole, approached very closely to those which theoretical analysis proves to be most serviceable. Where plane sails have been used, the bars have all had the same angle of inclination, ranging between twelve and eighteen degrees to the plane of revolution.

Reference to Fig. 4, taken in connection with the description of the windmills experimented upon by Coulomb, ‡ as well as the accounts and illustrations of special types given in this chapter, will not render it necessary to say more in a general way about the sails, than that they are either of rectangular or (more usually) of trapezoidal form, increasing in width as they approach the outer extremity of arm; that the innermost cross-bar is placed at about one-sixth to one-seventh of the length of the arm from the middle of the shaft; and that its length is about equal to this distance. So the canvas lattice-work covers only five-sixths or six-sevenths of the outer portion of the sails. In a sail about thirty feet long, the arms near the shaft are about one foot thick and nine

---

* See p. 41.

† See p. 42.

‡ See p. 128.

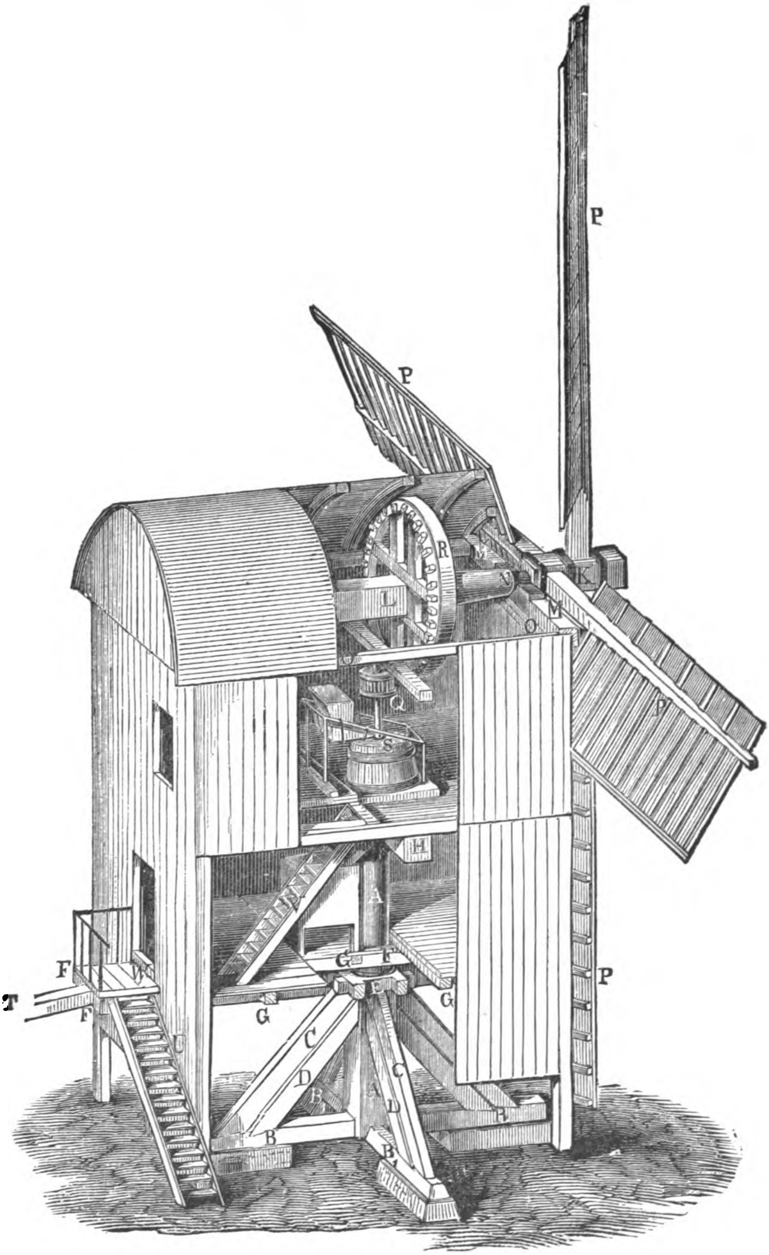

FIG. 5.

inches wide, and at the outer end about six inches thick and four and a half inches wide.

As the direction of the wind is changing perpetually, some contrivance is necessary for bringing the shaft into the direction of the wind, so that the sails will be acted upon most effectively. According as this revolution is effected, European vertical windmills have been divided into two general types: —

1. The *Post or German Mill*, in which the whole building which sustains the wind sails, shaft, and the machinery is supported upon a vertical post or column, upon which it revolves at will when actuated by a lever.

2. The *Tower or Dutch Mill*, in which only the head, cap, or dome of the building, with the shaft which it contains, revolves.

Post or German Mills.

It will be readily understood that not only are these mills necessarily limited in their size, but the manual labor their turning to the wind implies, led to their effectual abandonment when the tower mills had been made automatic in their regulation.

Fig. 5 shows a general view of a post mill, for which we are indebted to "A Manual of the Mechanics of Engineering and of the Construction of Machines," by Dr. Julius Weisbach, vol. ii., translation of Professor A. J. Du Bois, 1880, p. 637.

AA is the upright standard, supported by the cross-timbers *BB* and B_1B_1, and by the braces *C* and *D*; all these parts constituting the so-called post. On the head of the post is firmly placed the saddle *E*, composed of four pieces of wood fastened together. The mill house is supported by the two cross-beams, *FF*, and by two of the six cross-lying floor timbers, *GG*. It rests also upon the strong cross-timber *H*, which turns, by means of a pivot, upon the head of the post. The neck *N* of the axle *KL* turns in a metal or stone (basalt) plumber block, which rests upon the strong axle timber *MM*, the latter being supported by the roof framework *OO*.

Fig. 6 gives a sectional view of a post mill, taken from the "Encyclopædia of Arts, Manufactures, and Machinery," by Peter Barlow, F.R.S., professor at the Royal Military Academy, Woolwich; London, 1851. We copy the following description of this mill, verbatim, from the same source:—

> "*AB* is the wind shaft, one end of which has a bearing on the beam *C* of the framing of the mill, and the other is supported in a similar way by a beam *D*; the part of the shaft outside the mill is larger, and made square, and has two square holes or mortises through it, into which the whips or arms of the sails are fitted, and made fast by wedges, *aa*. The wheel *EE*, which is termed the brake wheel, is attached to the wind shaft; it has a rim of wood, *bb*, on its circumference, termed the brake, one end of which is attached to a fixed part of the mill, and the other by means of an iron rod, to a lever, *cd*; so that, by pressing down the end of the lever, the brake is made to bind upon the circumference of the wheel, and thereby produces such a resistance that the mill may be at any time stopped. The brake wheel is here represented on the old construction; i.e., the face wheel, which is supposed to work a trundle not shown in the figure.

"The lower floor of the mill is made to receive the post *P*, upon which the mill is turned round to face the wind. This post is a very strong tree, which is held perpendicularly by fixing it upon the middle of two long timbers, which form a large cross upon the ground, and which constitute the base of the whole mill. The post is secured in its vertical position by four oblique braces, *F*, *F*, *F*, *F*, which extend from the ground cross to the middle of it; leaving ten or twelve feet of the upper part, which is made round, clear from the obstruction of the braces.

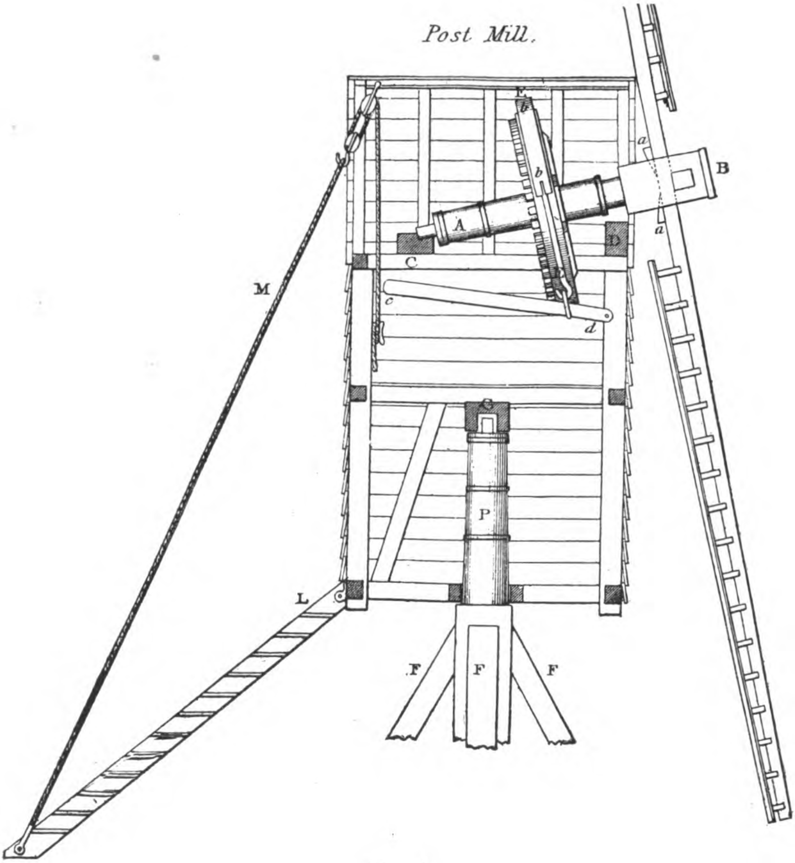

FIG. 6.

This round part of the post rises up through the middle of the lower chamber, in the floor of which a circular collar is formed to the exact diameter of the post. At the upper end of the post is a pivot or gudgeon, which enters into a socket fixed to one of the strongest beams, *G*, in the middle of the upper floor; this beam must necessarily be very strong, as it has to sustain the whole weight of the erection. In this way the mill is made to turn freely upon the pivot, while the collet in the lower floor serves to keep it steady and in a vertical position. *L* is a ladder for the purpose of ascending to the mill: it is united by joints to the back part of the framing, and has a rope, *M*, fastened to the lower end, which passes in an inclined direction into the mill, so that, by a lever or pulleys, it can be raised at pleasure clear of the ground. The ladder thus raised serves as a lever for turning the mill round, which is usually done by manual labor: sometimes, however, more force is necessary, and a small capstan is provided, to draw a rope attached to the end of the ladder. This capstan is movable, and can be fastened at pleasure to any of the posts which are fixed in the ground for the purpose. When the mill is by these means placed in the desired direction, the ladder is let down to the ground; and, its position being on the opposite side to that of the sails, it serves not only for ascent, and to keep the mill steady in position, but acts as a stay to resist the tendency of the wind to overturn it, — an occurrence which sometimes happens in mills of this description."

Tower or Dutch Mills.

In Dutch mills the dome only is turned, carrying the axle and sails with it into the required position; while the vertical toothed wheel merely travels about the pinion, and the connection is not broken. In order to allow the dome to turn, and at the same time secure it in position, it is most usual to construct the tower open at the top; this opening being strengthened by a wooden rim running completely around it. And on the upper surface thus exposed is a groove in which small circular metallic casters or rollers are placed, to turn on horizontal axes. The dome is made with a corresponding groove on its under side, so as to rest upon the rollers, and turn on them; while it has also a flange, projecting downwards, surrounding the rim of the tower, small vertical rollers being here also usually fixed between the two. Thus the dome can be turned with a slight effort into any required position, and by appropriate means can be fixed if desired.

The turning of the dome was formerly effected by a toothed wheel which engaged in a rack on the inner side, and which was turned by means of an endless cord pulled by a man; but at the present time *Cubitt's* method is employed. This consists of a set of small sails, or an auxiliary windmill, placed in an upright position upon a long arm or frame projecting in the plane of the horizontal shaft, but on the opposite side of the dome; the plane of the sails of the auxiliary windmill being nearly at right angles to the plane of the sails of the windmill proper. By their revolution, the sails turn a shaft and pinion, and finally act upon teeth surrounding the exterior of the dome, turning it until the wind no longer moves the auxiliary windmill vanes, when the sails proper will be exactly in their best position to receive the impulse of the wind.

Figs. 7 and 8 represent the upper or distinctive portion of the tower windmill, with Cubitt's method of bringing the sails into the wind. *AA* are the sides of the stationary part or body of the mill, which is either built of brick or stone, or framed in timber. *CC* is a wooden curb attached firmly to the top of the wall, and upon which the rollers of the cap revolve. It is commonly secured either to timbers built in the brick-

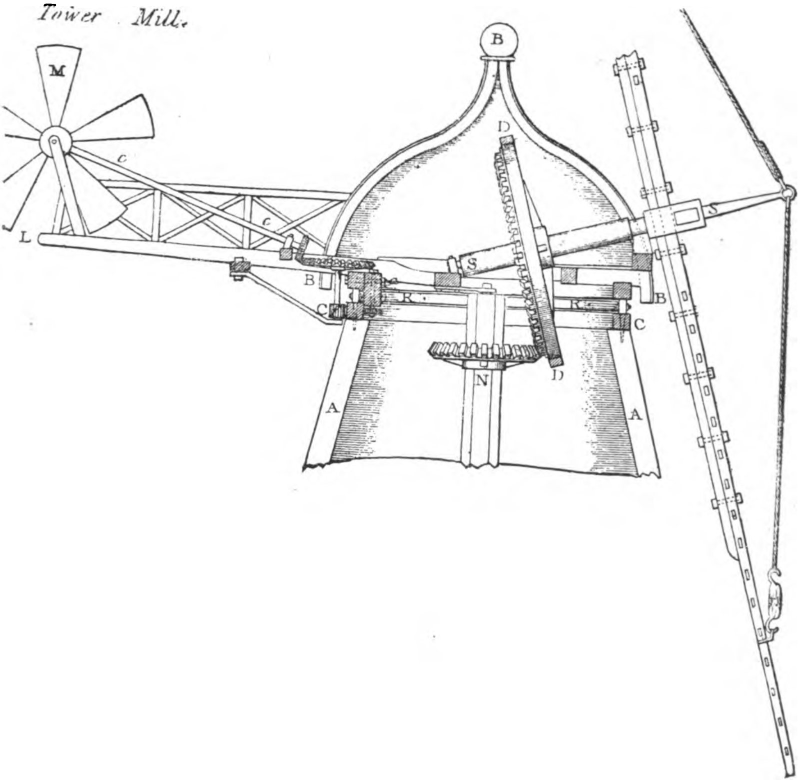

FIG. 7.

work, or to long iron rods which extend to a considerable distance down the walls. *BBB* is the cap, or head, of the mill, which is made of timber strongly framed together, with a circular curb at the lower part, which revolves upon the one attached to the body of the mill. *SS* is the iron wind shaft. *DD* is the driving-wheel, gearing into the bevelled crown wheel *N.* The brake, employed for stopping the mill entirely, is similar to that described in the post mill, Fig. 5. *RR*, Fig. 7, is the ring of rollers which supports the whole weight of the cap, and by means of which it may be turned round upon the curb *CC* with great facility, in any direction. The rollers, *aaaa*, seen in Fig. 8, which is a plan of the cap, are for the purpose of keeping it in its place. They are attached to the upper curb, and revolve against the inner surface of the lower one, which is made smooth and true. In Fig. 7 is shown the self-adjusting cap which is turned round by the force of the wind acting upon the auxiliary fan, so contrived that the sails are always presented in the proper direction. A small pair of sails, *M*, are attached to the projecting framework, *LL*, of the back part of the cap; it has a pinion upon its axle, which engages in a wheel, *b* (Fig. 8), attached to the inclined shaft *cc*: and at the other end of this shaft a bevelled pinion is fixed, which works in the wheel *e*, on the vertical spindle of pinion *f* (Fig. 7). This latter pinion engages the cogs on the outside of the rim of the fixed curb; and by these means, whenever the fan *M* is turned, it moves the head of the mill slowly round. It will be readily seen, by examining the manner in which the sails of the auxiliary windmill are constructed, that, when the plane of these sails is in the direction of the wind, they will not be put in motion by it; but, if the wind varies in the least from the direction of the shaft of the windmill sails proper, it acts obliquely upon the sails of the auxiliary mill, and turns them round; so that, on whatever side the wind may come, the motion conveyed to the machinery of the cap brings the main shaft again into the direction of the wind.

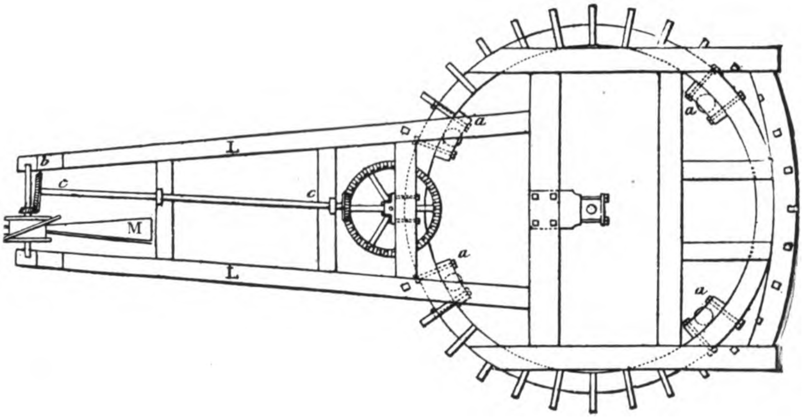

FIG. 8.

Windmill Governors.

The variations in the intensity of the wind being considerable, often so within a brief time, and sudden and extreme, it is necessary that windmills be provided with means of *regulation*, so that the motion of the machinery be uniform, and the work performed a constant quantity, irrespective of the varying pressure of the wind. At one time this was effected by the use of a friction strap applied to the outside of the wheel on the wind shaft, but this soon gave way to the method of regulation by change of extent of surface offered to the wind by increase or decrease of the amount of canvas of the sail. The latter was formerly accomplished by having a rope attached to each sail, or having the canvas made in three portions, controlled by separate ropes; and much trouble and delay were occasioned, as the mill required to be stopped, and a man had to ascend the sails separately to take in or let out the canvas. A description of such a mill is given in Fairbairn's "Mills and Millwork," as follows:—

> "The tower was of brickwork, and appeared to be eighteen feet diameter at the base, and about fifteen feet at the top, and about twenty-two feet high. The four wings were about thirty-five feet diameter, and of a rectangular shape, about fifteen feet long and five feet broad. The surface exposed to the wind was increased or diminished by the application of canvas sails, whose spread could be raised by reefing or twisting up the extreme end of the sails when the mill was in a state of rest. The main axle, which was octagonal in form, was constructed of oak, about fifteen inches diameter at the neck, and about ten inches at the rear end. The front of the axle, which received the arms, was square; and the two pairs of arms did not intersect the axle in the same plane, the one pair being in advance of the other. All the arms butted against the axle, and were united to it by side pieces, which were securely bolted to the arms and through the axle, which rendered mortising unnecessary, and preserved the strength of the shaft. The bearing in which the neck of the axle revolved, seemed to be formed of some hard

wood, probably lignum-vitæ, and was lubricated with soft soap and plumbago. The rear end of the shaft was fitted with an iron gudgeon, about three inches diameter, secured by iron hoops and wedges. About the middle of its length, this axle carried a face wheel about four feet diameter, which was constructed entirely of timber; its arms were mortised through the axle, and secured by iron hoops round the rim, which formed the bearing-surface for the friction strap or brake for arresting the speed of the mill. The teeth of this wheel, which were about three and a half or four inches broad, and four and a half pitch, geared into a trundle or pinion about fourteen or fifteen inches diameter, fixed at the top of a long vertical wrought-iron shaft about two and a half inches square, which was coupled at its lower extremity to the rhynd on the top of the millstone spindle; the long shaft being steadied by a bearing near the centre of its length, to prevent any jarring or vibration being communicated to the revolving millstones. . . . When the mill was set a-going, the wings performed twenty-nine revolutions per minute when loaded; and the extremity of the sails acquired a velocity of about thirty-two hundred feet per minute, or nearly thirty-five miles per hour."

In 1780 Mr. Andrew Meikle devised, for reefing the sails when the mill was in motion, an ingenious application of the centrifugal governor; viz., a sliding piece, which operated upon rollers placed transversely with the arms, and wound up or reefed the canvas when the sails attained too great a velocity. The unfurling of the sails or increasing their speed was accomplished by a weight which actuated a rod passing through the centre of the main axle, and operated centripetally on the sliding-frames, and then unwound the canvas when the motion of the sails was too much retarded. Fairbairn defines this as the first successful automatic reefing apparatus applied to windmills, and says, that, when the wind was not squally, it imparted to the mill a precision of motion little inferior to some of the then modern steam-engines, and that, by varying the weights for unfolding the sail, the power of the mill could be increased or diminished with facility.

In 1807 Mr. William Cubitt devised an excellent method of reefing the sails of windmills, by introducing movable shutters in the sails of the mills; which shutters were closed by a governor, operating upon a rod passing through the centre of the main axle. These shutters were suspended on points fixed almost one-third of their breadth from one side; and, when the wind was blowing too strong, it opened the shutters, and allowed a portion of the wind to pass through them, and so also checked the velocity of the mill.

Sir William Cubitt's devices for governing, which were satisfactory and effective, are illustrated in Figs. 9, 10, and 11; which cuts, as well as the following description, we extract from Barlow's "Encyclopædia of Arts, Manufactures, and Machinery."

"Fig. 9 represents a set of vanes, in which *AA* shows the valves turned to the wind, and their surfaces exposed at right angles to it; *BB* exhibits the vanes as close-reefed, with their edges to the wind, so that it can have no effect upon them, except on their edges. In the drawing, the vanes are exhibited as having the whip down the middle, with valves on both sides; but it is evident that the vanes may be constructed with the whip placed in the usual way, and have valves on one side only.

"Fig. 10 is a section through the wind shaft, exhibiting the apparatus for regulating the vanes. *A* is the wind shaft, which is bored through the centre, to admit an iron rod, *B*, to pass freely through it; one end of this rod has a knol or onion on it, which turns in a box, *c*, so that it can be moved endwise while it continues to revolve. The box *c* is fastened to a toothed rack, *D*, whose teeth engage those of a pinion, *E*,

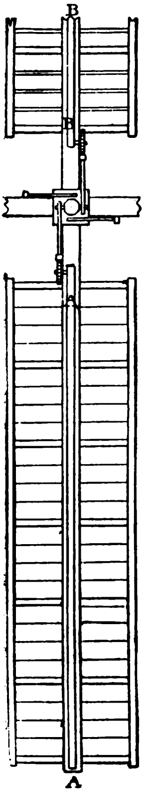

FIG. 9.

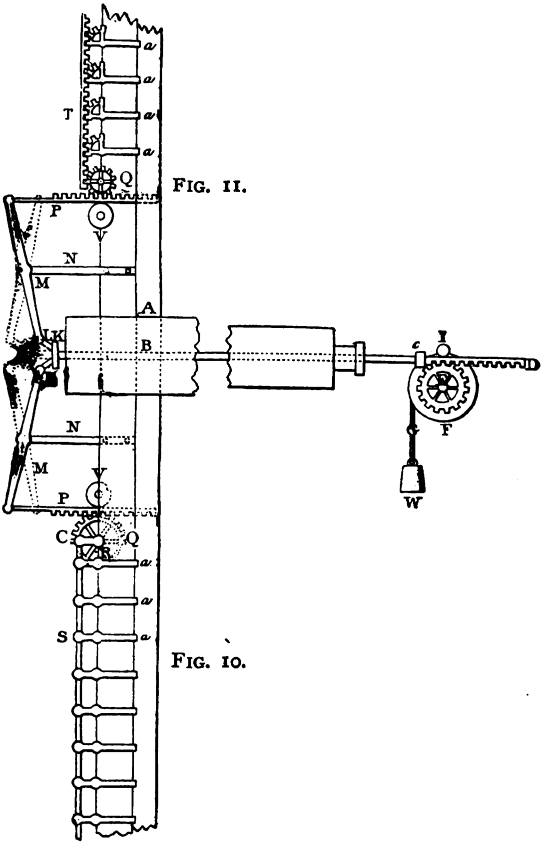

FIG. 11.

FIG. 10.

upon the spindle of which is a sheave, *F*, with a groove on its circumference to receive a rope, *G*, to which is hung the weight *W*. This weight serves to regulate the force of the wind upon the valves, and may be adjusted to the nature of the work to be performed by the mill. On the other end of the rod is fixed a plate of iron, *K*, with ears upon it, projecting from each side, in which are fixed the bridles or leaders, *L*, *L*, which permit the levers *M*, *M*, to describe a curve with their ends, while the iron rod *B* moves in a straight line. *N*, *N*, are two uprights or props, on the ends of which the levers *M*, *M*, move, and communicate the motion of the iron rod *B* to the racks *P*, *P*. These racks engage the pinions *Q*, *Q*, on the axis of which (according to one method here described, Fig. 10) is fixed a strong iron lever or crank, *C* : the end of this is attached to a slider, *S*. Each vane has a small lever projecting from it, which is fixed in the slider by a pin or gudgeon; so that, by the motion of the slider, the vanes present a different angle to the wind.

"The other method of regulating the vanes is shown in Fig. 11, where, instead of levers, the vanes have a pinion attached to them, which engages the teeth of a rack or slider, *T*.

"The operation of this apparatus will be readily understood by imagining the rope *G* pulled down so as to cause about three-quarters of a revolution of the sheave *F*. The pinion *E* will put in motion the rack *D* and rod *B*, which brings the lever into the position represented by the dotted lines. The rack *P* will have turned the pinions till the slider *S* or *T* (according to whichever method may be used) brings the vanes into such a position that their whole surface is presented to the wind; therefore, if a weight be hung upon the line *G*, it will keep the surface of the vanes to the wind until the strength of it is such as to raise the weight, when the vanes will be more or less opened until the pressure upon the inclined surface is reduced so as to balance the weight. By this means the force of the wind beyond that sufficient to raise the weight will not produce any additional velocity, and a degree of regularity will be attained which can never be produced by the ordinary method."

Other methods of governing the area of the sails according to the force of the wind have been devised and put into practice; but, since the above suffice to indicate the main types used, our object is accomplished, and we feel justified in limiting our presentation of European mills at this point. More especially is this permissible, since windmills of the European type are rapidly and deservedly being superseded by the American class of mill, for reasons briefly outlined in the next chapter, which treats more particularly of the various types and of the construction of American windmills.

CHAPTER V.

AMERICAN WINDMILLS.

Classification of Types. — Side-Vane Governor Mills.

American windmills differ from the European mills, already described, most conspicuously in the form of wheel receiving the impulse of the wind. Instead of the small number of sails of large width, common to the European or Dutch mills, the American wheel is made up of a great number of blades or slats of small width. This, of itself, gives an entirely distinct appearance to the American wheel, since it resembles a closed surface as compared to the large open spaces between the arms of the European mill, though, of course, ample room is provided between the slats to permit the free escape of the impinging air. This division of the receiving-surface of the mill into a large number of narrow sections, which in turn are sustained by truss rods from an extension of the main shaft, enables a much smaller aggregate weight of parts for a desired strength, size, and capacity of mill; so that the American windmill is lighter in weight, as well as in appearance, than the European mill. The angles employed are not as advantageous in the former as in the latter; but the surface presented for a given diameter is so much greater in the American wheel, as to more than compensate for this defect. No better proof of the superiority of the American windmill need be given than the fact that it is rapidly replacing the Dutch type in Germany, France, and England. In all of these countries the American type is now being manufactured on a large scale, especially so in Germany. The American windmill, too, is being extensively used in English colonies, on the recommendation of English engineers.

In presenting American windmill construction, it will not be our aim to give an account of every special variety of mill in the market, but rather to confine ourselves to an ample illustration of the leading features of the several types which distinguish American practice. Our attention will be directed mainly to the vertical mill, which is the leading class in America, and which, in point of economy and availability, of course so far surpasses the horizontal mill, as to make it unnecessary to do more than to give this brief reference to the latter type.*

The several types of American windmills are characterized by the form of wheel, and the method of regulation or governing employed to vary the extent of the surface presented to the wind, so that a uniform power and a uniform rate of revolution may be obtained under varying velocities of wind. The two principal types may be distinguished respectively as the sectional wheel with the centrifugal governor and independent rudder, and

---

* See p. 55.

the solid wheel with the side-vane governor and independent rudder. In both types, the rudder brings the wheel into the direction of the wind. This rudder is a large, strong vane, projecting opposite the shaft and the wheel. The plane of the rudder is vertical, and perpendicular to that of the wheel; so that the wind, however shifting, acts directly upon the rudder to bring the plane of the wheel normal to the wind. In the first type, the flying-out or receding of weighted arms cause the slats of the wheel to revolve, in sections, on pivots in the windmill arms or frame, thus bringing the slats or the surface of the wheel more or less normally to the direction of the wind. In the second type, there is a vane nearly in the plane of, and directly behind the solid wind wheel, which vane is attached to the bearing of the shaft. When the velocity of the wind increases, the increased pressure on this side vane causes the wind wheel to turn bodily away from the wind, the whole wind wheel and bearing rotating on a horizontal turntable, which forms part of the support of the mill. Thus, less effective surface is presented to the wind until the wind decreases, when the lowering of a counterbalancing weighted lever, raised previously by the turning of the wheel when. the pressure was high, causes the wheel, together with its accompanying side vane, to turn more normally to the wind.

Besides these two leading types, there are others. In a third type, a solid wind wheel is employed; but the regulation is effected by placing the rudder, or its equivalent, at a slight angle to the centre line of the shaft, so that the windmill is never entirely normal to the direction of the wind. As the wind pressure increases materially, the rudder is thrown more to the side, and the wheel more out of the wind.

In a fourth type, no rudder at all is employed, and the pressure of the wind on the wheel itself is relied upon to bring the wheel into the proper direction. These latter two types of governing are not at all sensitive, but answer satisfactorily for smaller mills, to which their use is restricted.

The two leading types, satisfactory in all sizes, are the solid wind wheel with side-vane regulation, and the sectional wind wheel with centrifugal governor regulation; both having independent rudders, to bring the windmill exactly normal to the direction of the wind. Either of these two types of governing is applied to the smallest and the largest sizes of windmills, and acts with sufficient accuracy and promptness to place the American windmill in the rank of reliable automatic engines.

It will be readily understood that the centrifugal governor is somewhat speedier and more sensitive in action than the side-vane governor, but the former type of mill has the disadvantage of the wear and tear of the pivots. Practically, however, the side-vane governor is sufficiently sensitive and speedy in action; while, on the other hand, the wear and tear of the centrifugal-governor type, of proper construction, has not been found to be a material objection in use. As a fact, the choice between these two types is narrowed to very close limits, and both types are in use to an almost equal extent, and give an almost equal degree of satisfaction.

The main point in the selection of a windmill, as far as its reliability of action and durability are concerned, is, to insist on the use of good materials and workmanship; and, though both these requisites have a fair representation in this country, there is a sufficient amount of poor work done to make it a necessity to call special attention to this prime need.

Side-Vane Governor Mills.

The Corcoran Mill. — Among this class of mill, there is none superior and justly more highly esteemed than that manufactured by Mr. A. J. Corcoran of New-York City.

Fig. 12 well presents the main features and details of Mr. Corcoran's windmill for water supply. The ironwork is indicated by numbers, and the woodwork by letters. *IJK* represents a twelve-foot wind wheel, *N* the side vane, *M* the flexible rudder, 26 the weighted lever, 10 the connecting-link, 24 the slide; all concentrated in the iron frame 1. 17 is the supporting-piece, faced on top, and bored out to receive the frame 1, having flange on top to hold lubricating compound, and being secured to the mast by four bolts. A flange also extends halfway over the top of the mast. At 18 is an

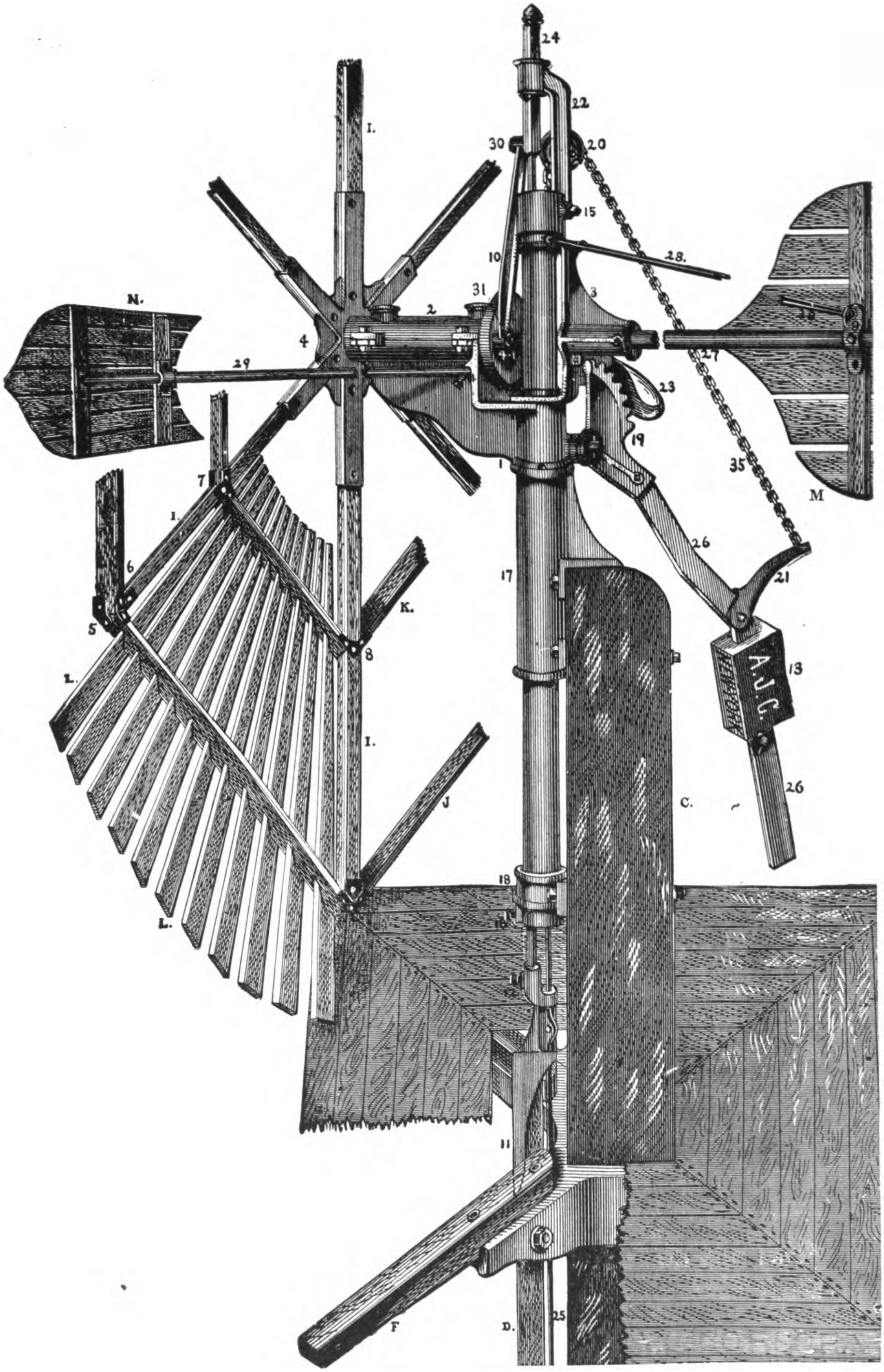
24
22
30
20
15
10
28.
I.
31
2
3
N.
4
29
28
27
23
19
1
35
M
7
I.
6
5
L.
8
K.
26
17
21
A.J.C.
13
26
I.
J
C.
L.
18
16
12
11
F
D.
25

FIG. 12.

additional support, bored out to fit 1, and secured to the post by two bolts. The main frame of the mill consists of a piece of hydraulic tubing, with a bearing to support the wind-wheel shaft, resting on an anti-friction washer, which is held in place by cap 16. The object of this tubing, coming down the mast as far as the windmill arm *I*, is to give the main frame of the windmill a more equal leverage with a strain brought upon the arm, and thereby prevent any rocking motion of the mill on the mast in unsteady winds. At 27 is the rudder bar, and at 28 the truss rods which support the rudder vane. The ends of the wrought-iron connecting-link 10 are babbitted to fit steel pins on the crank wheel and slide. The crank wheel has various centres, to admit of different strokes of pumps, with a given diameter of wind wheel. The wrought-iron lever 26 is bolted to the piece 19, which works on the stud pin on the rear of the frame. The chain 35 is connected to the stop rod 25, which is secured to a small lever on the mast, near the ground. By bearing down on the lever, the wheel is brought around parallel with the rudder, thus presenting only the ends of the slats to the wind. The arms *I* are bolted to a centrepiece, 4, as shown; this spider form of support 4 being a characteristic part of all American vertical windmills. This form of wind wheel is known as the "rosette" pattern. In high winds, the increased pressure on the independent side vane causes the wind wheel to gradually turn around, away from the wind · raising the weighted lever 26. This lever, in turn, falls

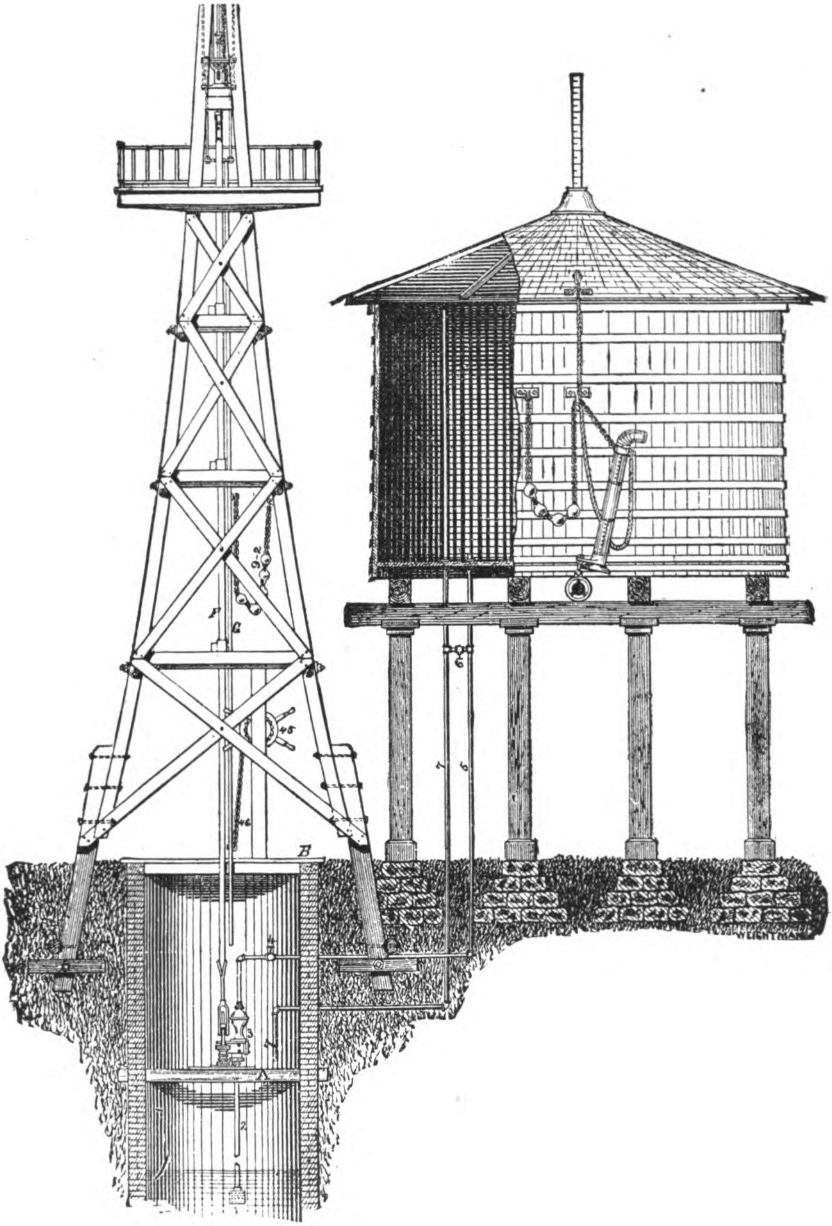

FIG. 13.

as the wind pressure again decreases, and thus the wheel is again brought more normal to the wind. Thus a uniform rate of speed is maintained, proportioned to the position of the weight 13 on the lever.

The parts of this mill are accurately fitted to standard gauge, and are therefore interchangeable.

In Fig. 13 is illustrated a Corcoran Windmill as applied to railway water stations. *A* is the pump timber, *B* the well curb, *F* the pump pitman, *G* the stopping-rod, 1 the foot valve, 2 the suction valve, 3 the pump, 4 the globe valve, 5 the delivery pipe, 6 the valve for emptying tank, and 7 the overflow pipe. This illustration also shows the wooden tower of the Corcoran Windmill for sizes from sixteen to forty feet diameter of wheel, with the camber of its side beams to secure stiffness and lateral strength. A cheaper method of erecting a tower for windmills of from eight and a half to fourteen feet diameter of wheel is shown in Fig. 14, which explains itself.

Fig. 15 (p. 85) shows a Corcoran Geared Windmill, designed for driving machinery. The windmill is made in sizes of from sixteen to thirty feet diameter of wheel. The illustration shows the method of transmitting the power from the windmill by shaft No. 26 to the pulley No. 13, as well as the general construction and appearance of the ironwork, of which material the mill is principally composed, the wind wheel and the rudder vane being the only parts of wood.

The regulating or governing principle of this mill is substantially the same as that of the pumping-windmill,

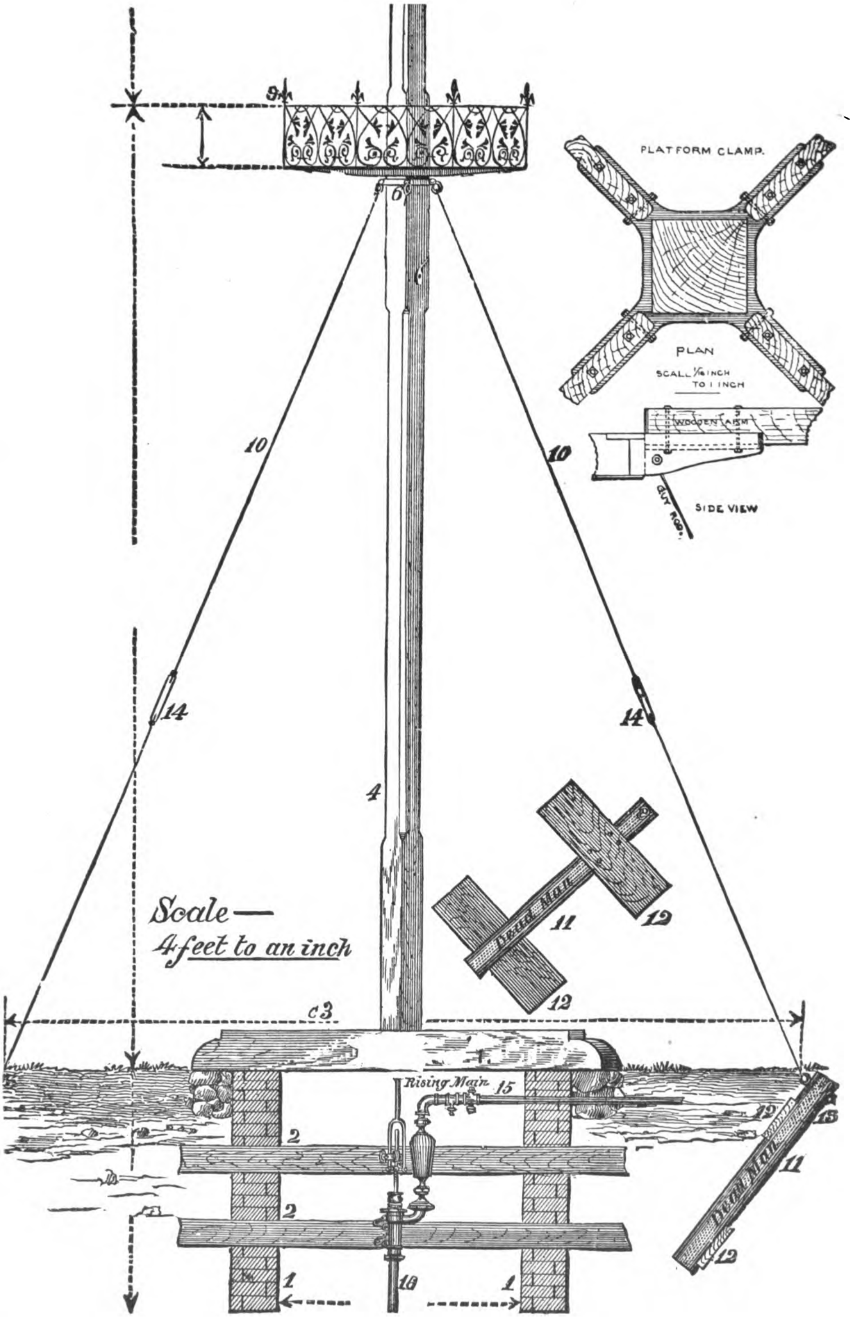
9
6
PLATFORM CLAMP.
PLAN
SCALE 1/8 INCH TO 1 INCH
WOODEN ARM
GUY ROD
SIDE VIEW
10
10
14
14
4
Dead Man
11
12
12
Scale—
4 feet to an inch
c3
1
Rising Main 15
2
2
1
1
16
12
13
Dead Man
11
12

FIG. 14.

shown and described in Fig. 12; the balls and chain attached to No. 16 of this mill being equivalent to the weight bar No. 26, the weight No. 13, and the quadrant No. 19, of the pumping-mill.

The regulation of this mill is accomplished independently of any of the parts used for transmitting the power. All the parts of the same size of this mill interchange, all journals are turned to measurement of solid calipers, the bearings are babbitted on mandrels prepared for the work, and the holes are drilled by template. The material employed consists mainly of malleable iron. The shafting is cold-rolled, and steel pins are used for all the joints.

In this mill, the upright and line shaft are all secured in one iron frame, and so fitted that they cannot get out of line during erection or during action, the weather not affecting the same, as is the case where wood is employed for the main frame.

Referring to the cut (Fig. 15), Nos. 4 and 5 are gears made of Bessemer steel, and are graduated for speed at the rate of one revolution to three. The vertical shaft No. 8 revolves in Babbitt-metal bearings No. 6, and in No. 1 at point shown by No. 3. No. 21 is a dome enclosing Nos. 4 and 5. It is faced in a lathe, and bolted to No. 1. No. 22 is secured to No. 21 by a flange and bolts, same as that used for a shaft coupling, and is cone-shaped, in order to prevent its getting out of line should any of the bolts become loosened. Nos. 21 and 22 cover the gears, protecting them from sleet or ice, or from the entrance of any thing injurious. At the same time, they

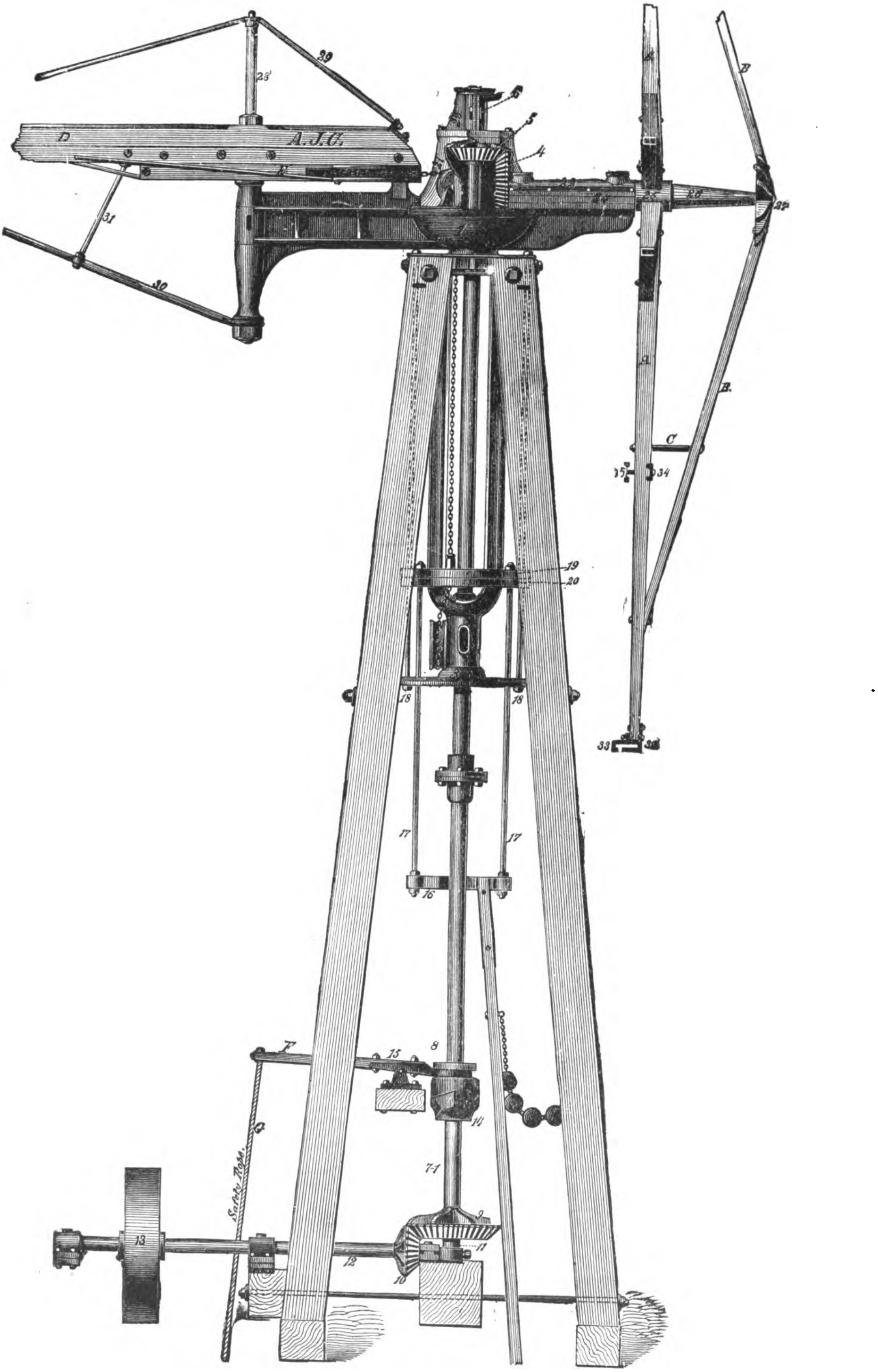
28'
29
D
A.J.C.
E
31
30
6
5
4
23
24
26
25
A
B
A
B.
C
35
34
19
20
18
18
33
32
17
17
16
F
15
8
14
G
Safety Rope
7-1
9
13
12
11
10

FIG. 15.

form a strong and substantial support for the upper end of the vertical shaft, also keeping No. 5 in place; and in the event of repairs being necessary, or an alteration of the shaft No. 8, the latter can be easily removed, without taking down the mill, by taking off the cap or dome No. 22.

The turn-table No. 1 rests and turns on a step casting, No. 3, which has a deep recess for receiving the end of No. 1. It also has a steel friction washer; and the entire weight of the mill, supported by No. 1, rests and turns on this steel friction washer, sustained by No. 3. The windmill may be stopped and started by raising or lowering a wooden rod connected with No. 16. This lever is operated by a windlass placed in the bottom of the tower; and, by raising the wooden rod and cross-head No. 16, the rings No. 19 and 20 move on the rods No. 18, the rings being connected by a chain with the half-circle board *E*, a part of the rudder *D*.

The upright shaft 7–1, and the horizontal shaft 12, are supported by a combined bearing; making it impossible for either to get out of line. The upright shaft has a steel lower end, revolving in a copper friction washer No. 8. No. 12 is made of cold-rolled shafting or of steel.

An important feature of the mill is the safety lever *F*, and the clutch coupling No. 14. No. 15 is a forked lever, and works in a groove in No. 14. The shafts 7–1 and 8 are made in two pieces, united by the coupling No. 14; the upper half working on a feather or spline, and the lower half being firmly keyed to the coupling.

It is, of course, very important that there should be a means of stopping the motion instantly in case of accident, should the belt slip off, or for other reasons. Any windmill can be stopped by pulling it out of the wind; but, as this does not do away with its momentum, it is some time before the line shaft 12 comes to a state of absolute rest. With this mill, the safety rope *G* is brought to a convenient point in the tower or shop, where any one can pull down on it; and doing so separates the coupling, lifting the upper half from the lower, and allows No. 8 to revolve, while No. 7–1 and all below it stop instantly.

This method also makes it unnecessary to shift a heavy belt to stop the machinery in the shop.

The number of arms *A* used in the wind wheel depends upon its size, and varies from eight to twelve. They are securely bolted to the hub No. 25, and supported by the front braces *B*, fastened to the brace head No. 27, connected with main shaft No. 26, and supported by girts *C*. The sections of the wind wheel — or fans, as they are not uncommonly called — are connected to arms *A* by malleable iron clips 32, 33, 34, 35, making from two to eight complete circles around the wind wheel when all the sections are in place.

The Eclipse Windmill, manufactured by the Eclipse Windmill Company at Beloit, Wis., is identical in principle with the Corcoran mill, just described. Indeed, the Eclipse is the parent of the Corcoran mill, and the latter but a refinement of the former, the two differing only in a few minor details. The main difference is in the grade of construction. The Corcoran mill is specially designed for a high class of trade, while the Eclipse is built for a wider and more general use. But inasmuch as the principle and main construction of the two mills are alike, it is not necessary to detail the Eclipse mill at length, as the illustrations and description of the one will virtually answer for the other. Suffice it to say that the Eclipse is a good reliable mill, has a large representation on the railroads of the country, besides its extended use for other pumping and power purposes, and that it is manufactured in large numbers in Germany. The fact should also be noted, that the Eclipse Windmill Company manufactures a larger number of side-vane governor mills than any other firm, and is, indeed, one of the two largest windmill concerns in the country. The other concern, manufacturing a different type of mill, is referred to on the next page.

CHAPTER VI.

AMERICAN WINDMILLS (CONTINUED).

Centrifugal-Governor Mills.

Of the centrifugal-governor mills, the Halladay, manufactured by the United-States Wind Engine and Pump Company of Batavia, Ill., is most extensively used in America; and its excellent record and extensive use make it stand out pre-eminent among centrifugal-governor mills.

Fig. 16 clearly shows the general construction and method of operation of the mill. *A*, the bed plate, is a strong casting, resting on, and firmly bolted to two masts in the tower, and further secured by the two braces *E*, *E*. Upon this revolves the turn-table *B*, held in position by bolts *K*, with oblong heads, which reach under the bed plate. The turn-table moves on rollers, which allow it to turn freely as the wind changes its direction. These rollers run on a lathe-turned track, and both are protected from the weather by flanges on the turn-table. The spider *CC*, to which are bolted the arms or spokes of the wind wheel, is firmly keyed to the main shaft, which rotates in Babbitt-lined boxes on the turn-

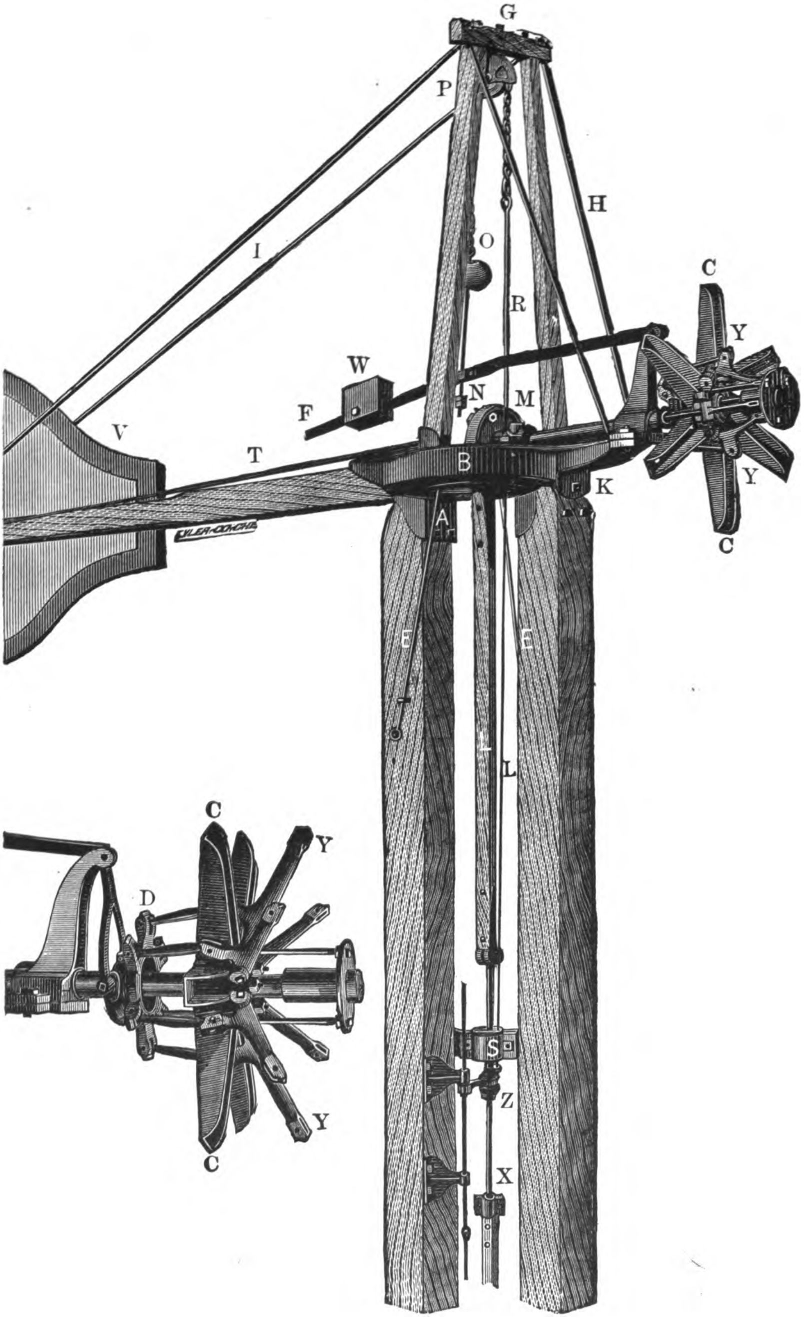

FIG. 16.

table. On the inner end of this shaft is keyed the crank-plate *M*, to which is attached the pitman *L*. By means of the post attachments, consisting of sleeve box *S*, swivel box *X*, and sliding-boss *Z*, connection is so made between the pitman and the pump, that the revolving of the turn-table upon the bed plate will not twist or cramp the connections, or prevent sails being spread or furled, by means of shut-off rod *R*.

The regulating-gear consists of the sliding-head *D*, elbows *Y*, and their connections. The inner end of each elbow is connected to the sliding-head by a link, the connections from the outer ends to the sails being made by means of regulating-rods.

On the outer ends of the regulating-rods are the governing-balls or regulating-weights, the action of which is the same as the governor on a steam-engine, causing the sails to present less surface to the wind as its velocity increases.

The weight *W*, on forked lever *F*, acts in opposition to the regulating-weights, causing the sails to present more surface to the wind as the power of the wind decreases. The sails may be furled, and the mill stopped and made to stand still, by pulling down on shut-off rod *R*. The regulating-gear is comparatively simple, securing a direct connection with each sail, and direct action of the regulating-weights on the sliding-head and its connections, thereby giving positive movement to all the parts.

Fig. 17 gives the detail of the iron-work in the Halladay Mill. 1 represents the turn-table; 1*a*, the rear cap

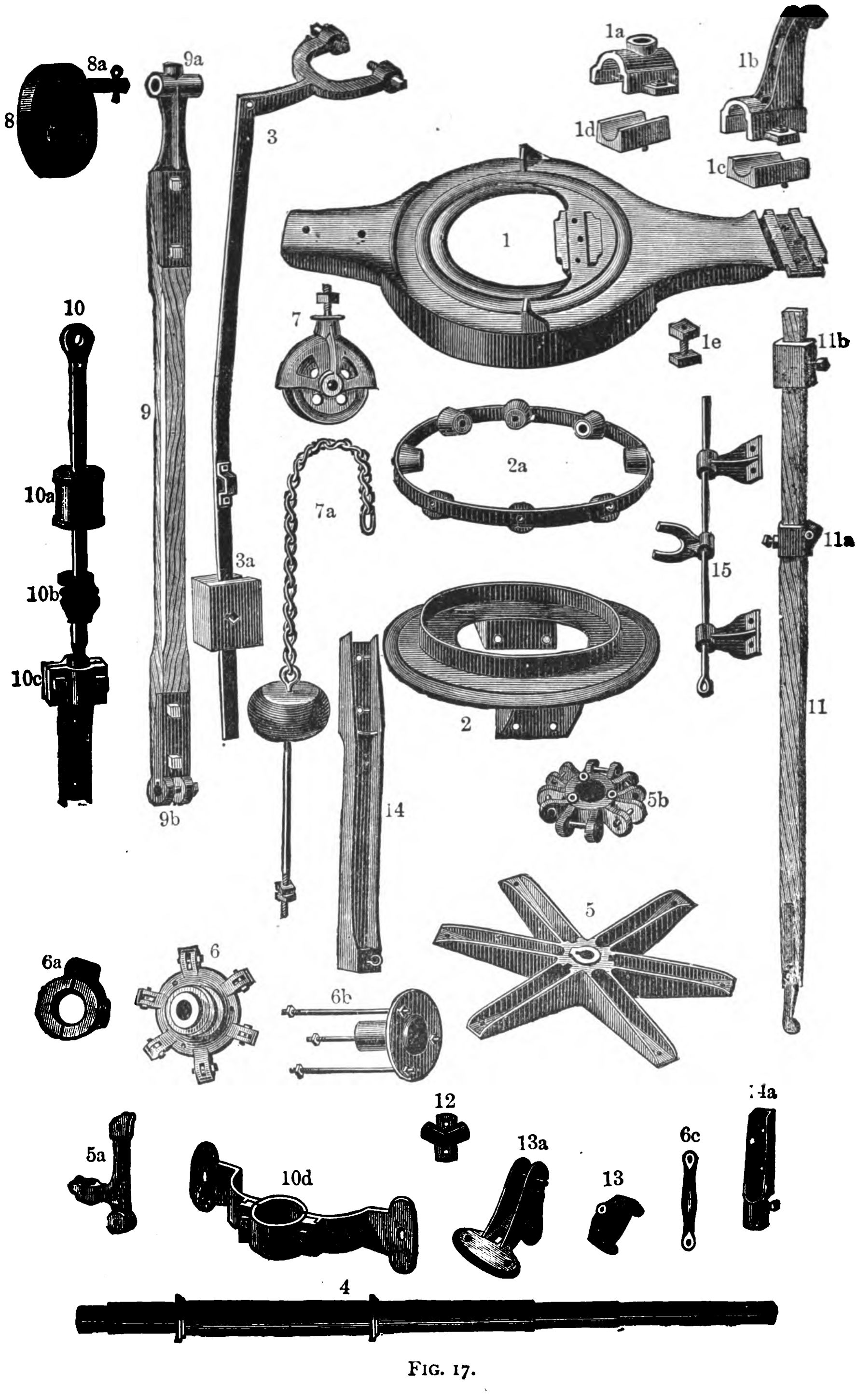
8a
9a
1a
1b
8
3
1d
1c
1
10
7
1e
11b
9
2a
10a
7a
11a
3a
15
10b
10c
2
11
5b
9b
14
5
6a
6
6b
12
14a
5a
10d
13a
6c
13
4

FIG. 17.

on turn-table; 1*b*, the front cap on turn-table; 1*c*, front box on turn-table; 1*d*, rear box on turn-table; 1*e*, clamp

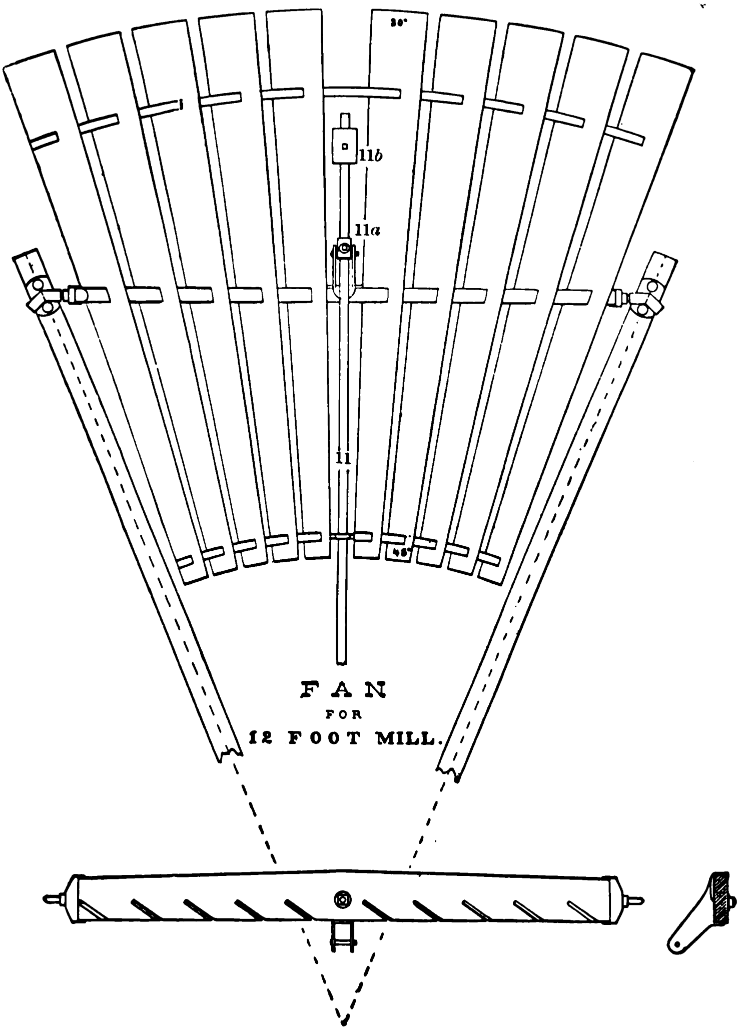

FIG. 18.

bolt; 2, bed plate; 2*a*, anti-friction rolls and carriage; 3, forked lever; 3*a*, weight on forked lever; 4, main shaft;

5, spider; 5*a*, elbow; 5*b*, elbow collar; 6, back plate; 6*a*, shoes on back plate; 6*b*, front-plate and slide-head rods; 6*c*, link connecting back plate to elbow; 7, chain pulley; 7*a*, balance weight and chain; 8, crank plate; 8*a*, crank pin; 9, pitman; 9*a*, top pitman box; 9*b*, lower pitman box; 10, stub end; 10*a*, sleeve on stub end; 10*b*, sliding-boss on stub end; 10*c*, swivel box; 10*d*, sleeve box; 11 (see also Fig. 18), regulating-rod; 11*a*, set iron on regulating-rod; 11*b*, regulating-weight; 12, angle box; 13, tilt-bar socket; 13*a*, tilt-bar lever; 14, flat-bar connection; 14*a*, force-pump connection; 15, slide fork.

Fig. 18 represents the detail arrangement of the fan of the 12-foot mill.

The angles of weather of the slats vary from 30 to 45 degrees, depending upon the size and kind of windmill. In the geared mills the slats are set flatter than in the pumping mills, as they are run more rapidly.

Fig. 19 shows the general arrangement of the geared mills.

The Halladay Windmill is in more extensive use in America for railway water stations than any other mill, and the general view presented in Fig. 20 is therefore of interest.

The manufacturers claim that hundreds of their windmills have been in active use on railways for over twenty years, at an expense not exceeding an average of five dollars per year for oil and repairs. We see no reason to question the correctness of this statement.

This mill is constructed in Germany, by Friedrich Filler

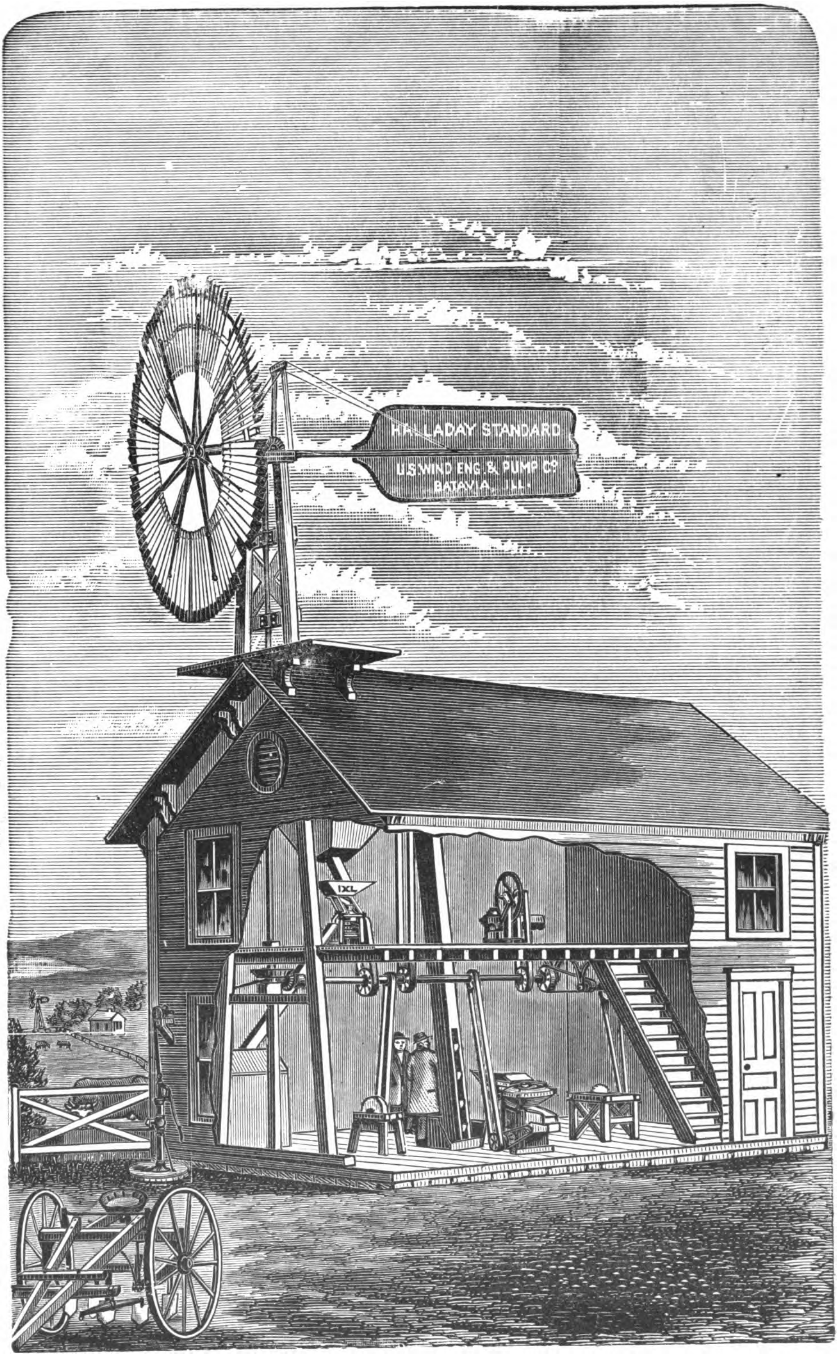

FIG. 19.

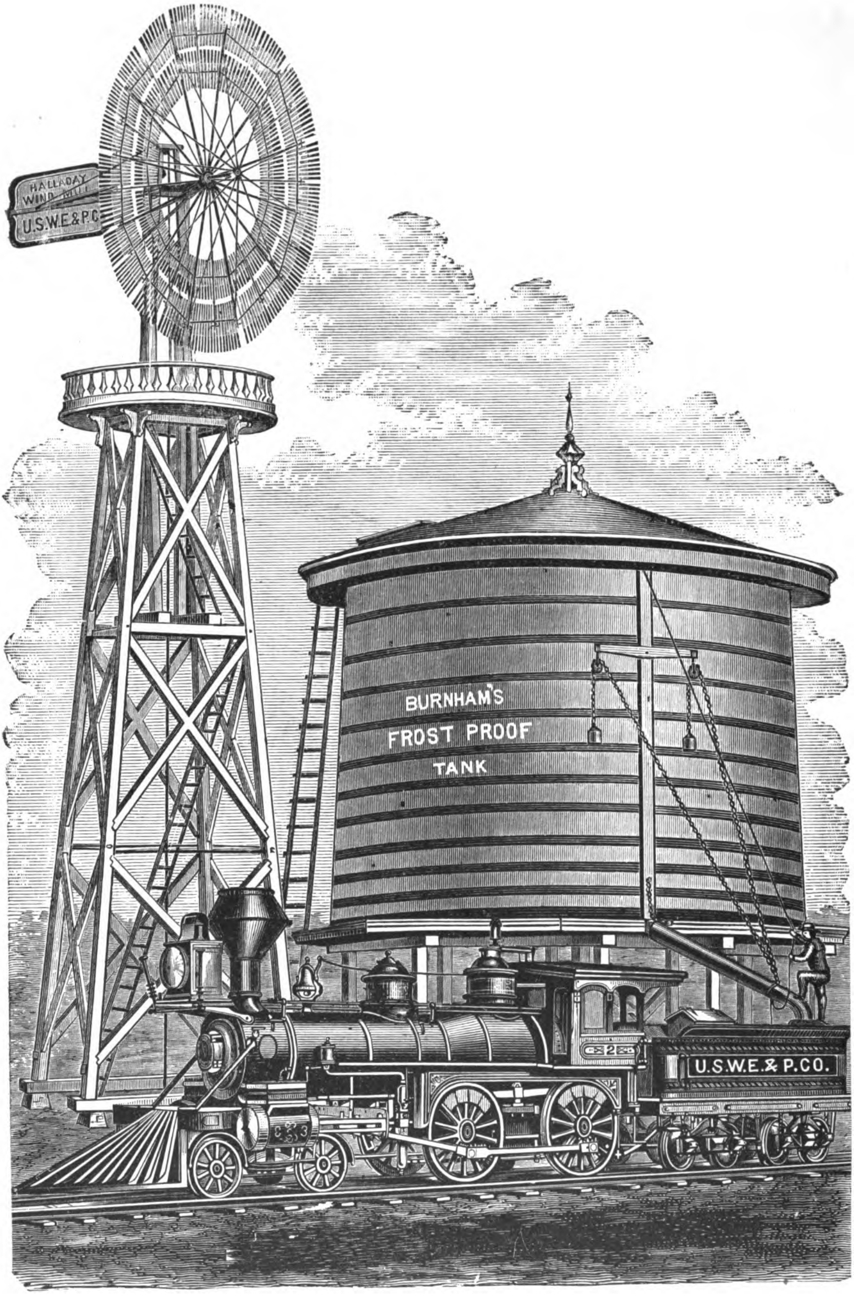
HALLADAY WIND MILL
U.S.W.E.&P.C.
BURNHAM'S FROST PROOF TANK
2
U.S.W.E.& P.CO.

FIG. 20.

of Eimsbüttel, Hamburg, who does quite an extensive business in its manufacture. We illustrate, in Figs. 21 and 22, a few interesting applications made by Mr. Filler, which speak for themselves.

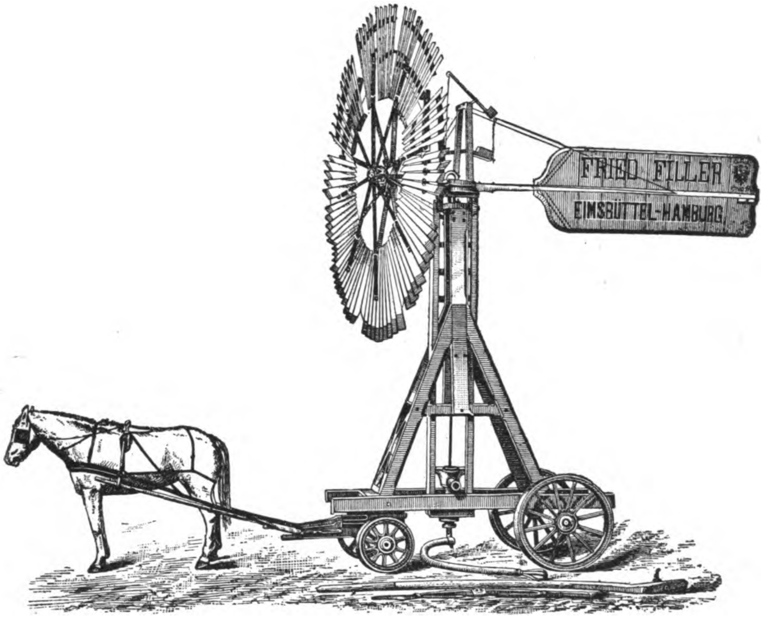

FIG. 21.

The Althouse Windmill. — Figs. 23, 24, and 25 illustrate the well-known centrifugal-governor mills, manufactured by Messrs. Althouse, Wheeler, & Co., of Waupun, Wis. The rudder is not shown in any of the cuts. Fig. 23 is a 10-foot mill, as constructed for pumping-purposes. Fig. 24 is a 14-foot geared mill, as constructed for power purposes. In this case the rudder is very small, and placed in front of the wheel, and parallel to the main shaft. Fig. 25 shows the iron-work in detail. Like figures apply to like parts in the several illustrations. 1 represents the bed plate; 2, the step; 3, the turn-table; 3*c*, turn-table roller block; 3*e*, turn-table rollers; 4, turn-table sleeve: 5, turn-table sleeve clip; 6, main shaft; 8, spider; 9, crank wheel; 10, crank pin; 11, slide head; 14, front slide; 17, chilled clutch ring (2 pieces); 20, clutch oil cup; 21, forked clutch bar; 24, weight lever; 27, weight; 28, truss posts; 30, truss rod; 33, pitman; 34, pitman upper box; 36, swivel; 37, swivel collar; 38, wood-rod attachment; 39, section levers; 40, section levers, links straight; 41, section levers, curved;

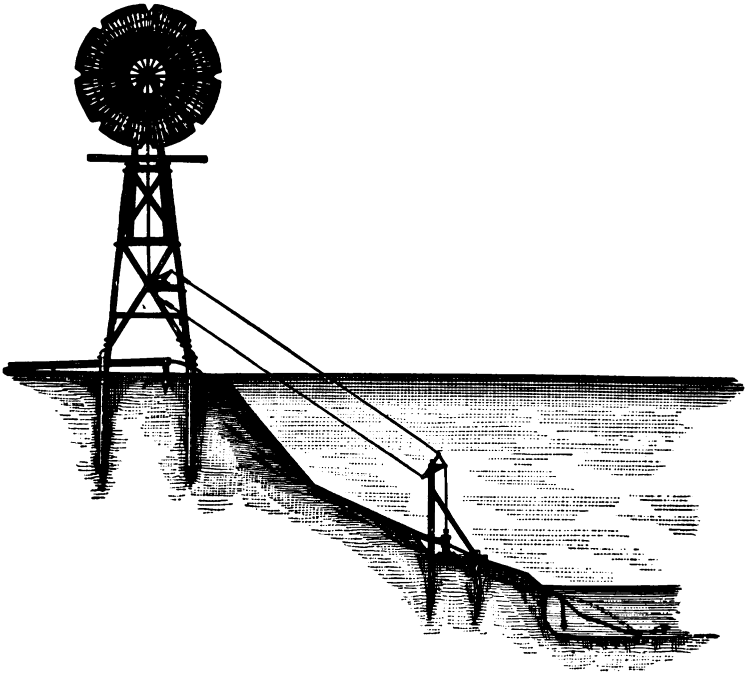

FIG. 22.

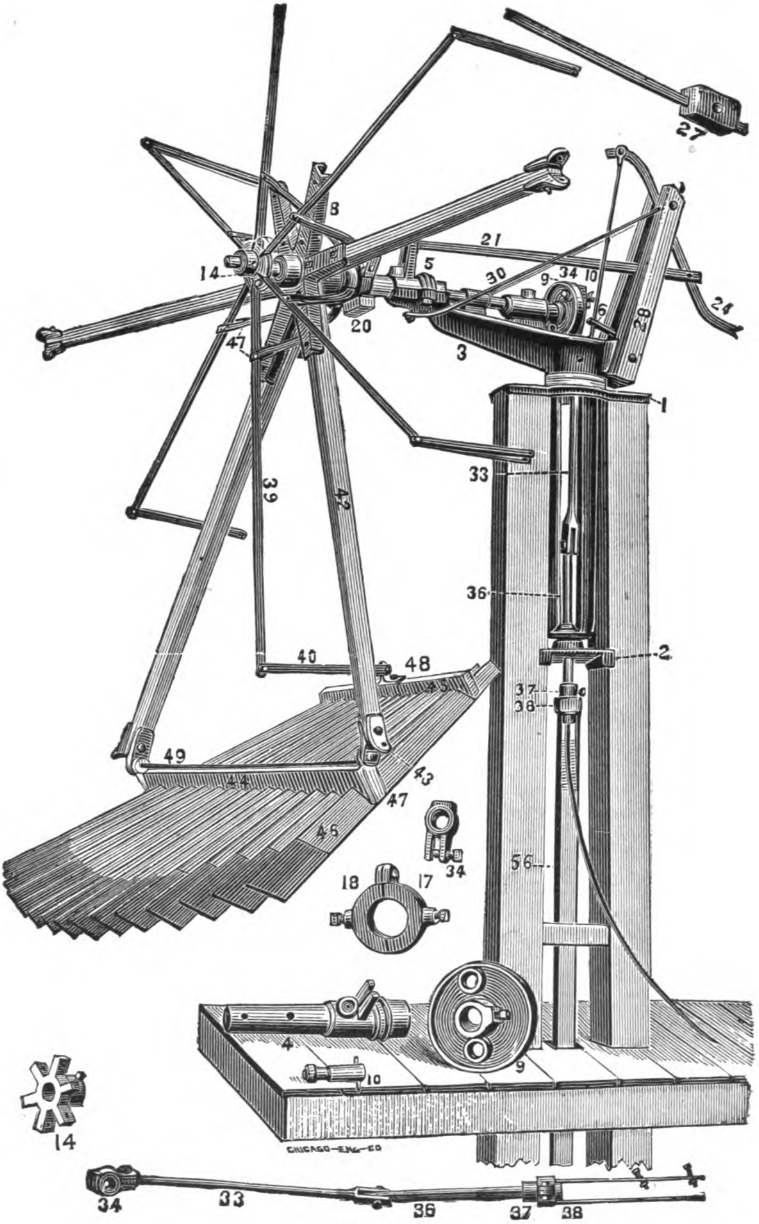
27
8
21
14
5
30
9
34
10
6
28
24
20
47
3
1
33
39
42
36
2
40
48
45
37
38
49
44
43
47
46
34
18
17
56
4
10
9
14
CHICAGO-ENG-CO
34
33
36
37
38

FIG. 23.

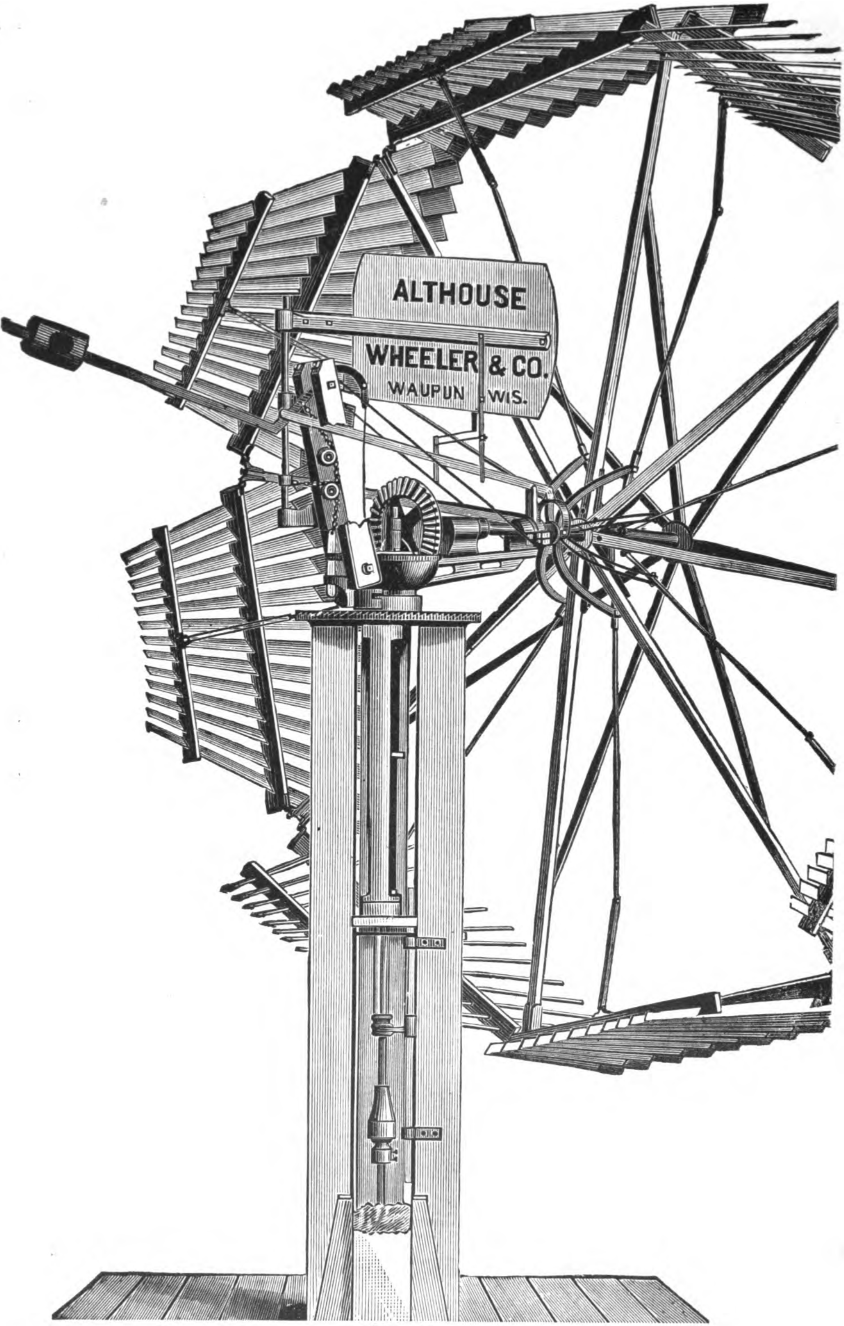

FIG. 24.

42, arms; 43, arm irons; 46, section fans; 47, section centre-bar castings; 48, section inner-bar castings; 49, section rods; 55, splice irons for wood rods; 56, wood pitman rods; 57, pump attachment; 59, arm weight; 60, hand lever.

The Adams Windmill, constructed by the Marseilles Manufacturing Company, Marseilles, Ill., is shown in Fig. 26. It is identical in principle with the Halladay Mill, with the exception that the centrifugal governor, consisting of weighted lever, has no slide head as a counterbalancing mechanism, but the regulating-rods leading from the centre of the section bars are attached to a cylindrical friction wheel placed on the rear of the hub. This friction wheel consists of a curved spring, set for a given speed, which, when this speed is exceeded, is curled up, and retards the motion of the cylinder to which it is attached, thus causing the rods to pull the sails more out of the wind. When the wind again decreases, the spring uncurls, and the sections, actuated by the weighted lever, again enter more into the wind.

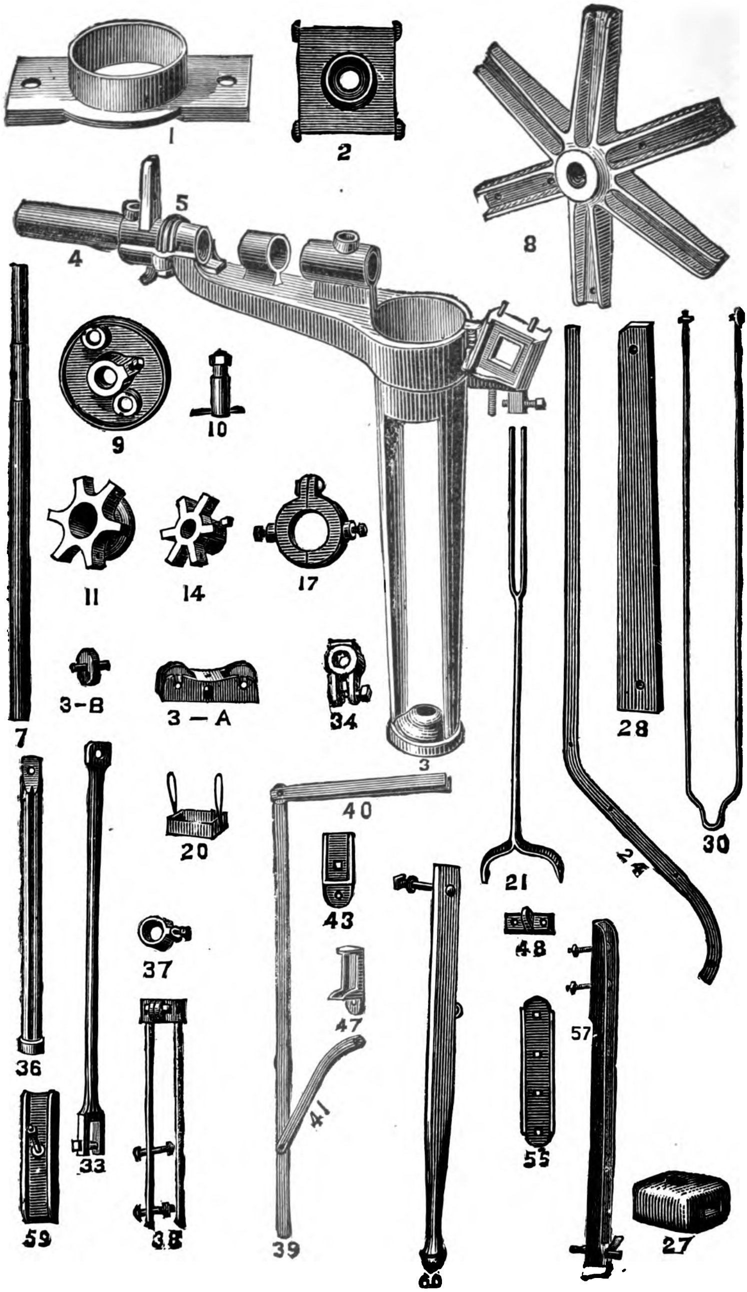
1
2
8
5
4
9
10
7
3
11
14
17
3-B
3 — A
34
21
24
28
30
40
20
43
48
36
33
37
47
57
41
55
59
38
39
60
27

FIG. 25.

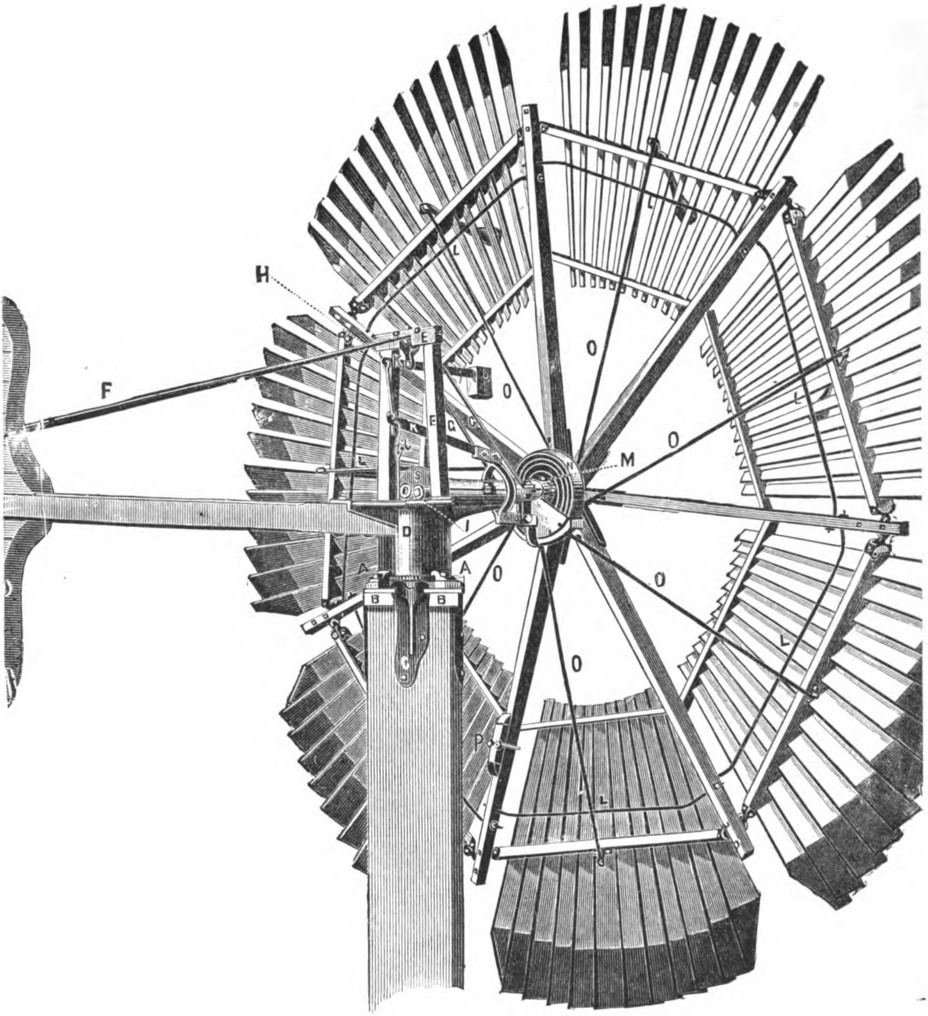

Fig. 26.

CHAPTER VII.

AMERICAN WINDMILLS: OTHER TYPES. — VELOCITY REGULATION, ETC.

The Buchanan Windmill.

THIS wheel, shown in Fig. 27, belongs to the class of mills which depend for their regulation upon the natural tendency of the wheel to go into the direction it turns, as the velocity of wind increases materially. In the detailed view showing the mechanism, *A* is a wrought-iron pipe, upon which the whole structure is supported; *B* is the main frame which turns on the pipe *A*; *D* is the governing device. As will be seen, a lug projecting from the side of the lever bears upon the inclined projection on the main frame: so that, when the mill is thrown out of the wind, the weight-lever is elevated; and as the wind decreases from its high velocity, the lowering of the weighted lever again brings the wheel into the direction of the wind. *G* is the derrick cap, *F* the cross-head, *I* a spring to cushion against the sudden throwing of the mill out of the wind, — a necessity in the class of mills which are governed by the velocity action of the wheel itself.

A feature of this mill different from all others is the method of fastening the slats to the section bar of the

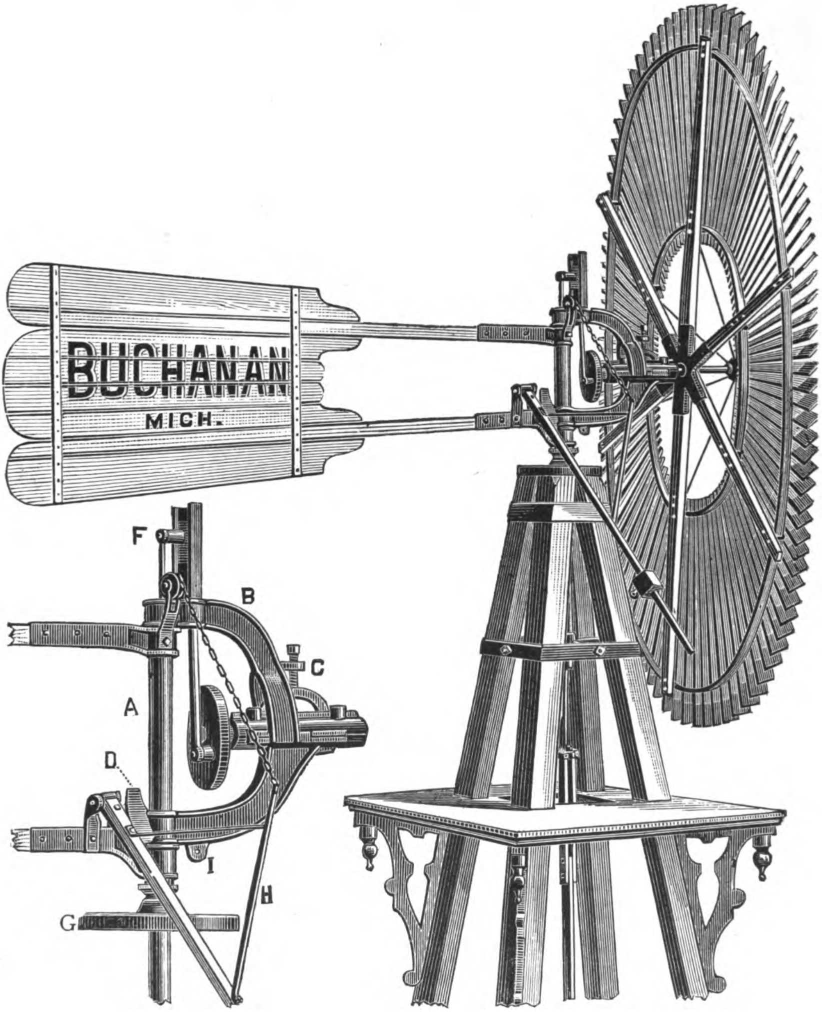

FIG. 27.

wheel. While in other mills the slats are secured in grooves in the section bars, by means of nails, the slats in the Buchanan Mill are secured to the section bars by wire clips.

The Woodmanse Windmill.

This mill, manufactured by the Woodmanse Windmill Company, Freeport, Ill. (see Fig. 28), has a solid wheel, and the rudder in the centre line of the main shaft, to bring the wheel into the line of the wind. Its change of extent of surface, according to the force of the wind, is caused by a natural tendency of the wheel, running at a high rate of speed, to move bodily in the direction that the wheel turns. Of course this action is felt materially only at high speed, which precludes the possibility of such mode of regulation for large mills. In fact, it is used with good effect only for small pumping-mills, where it gives satisfaction.

It will be readily understood, that, as this wheel shifts out of the wind at high speed, the weight shown in Fig. 28 is lifted. Its lowering when the wind decreases, again brings the wheel into the direction of the wind. This windmill is well constructed, and is therefore a good machine of the type it represents.

The Stover Windmill.

The Stover Windmill, manufactured by the Freeport Machine Company of Freeport, Ill., is similar to the mill shown in Fig. 28, except that the rudder, instead of being in the centre line, stands off from three to six inches from the main shaft, but is parallel to it. The

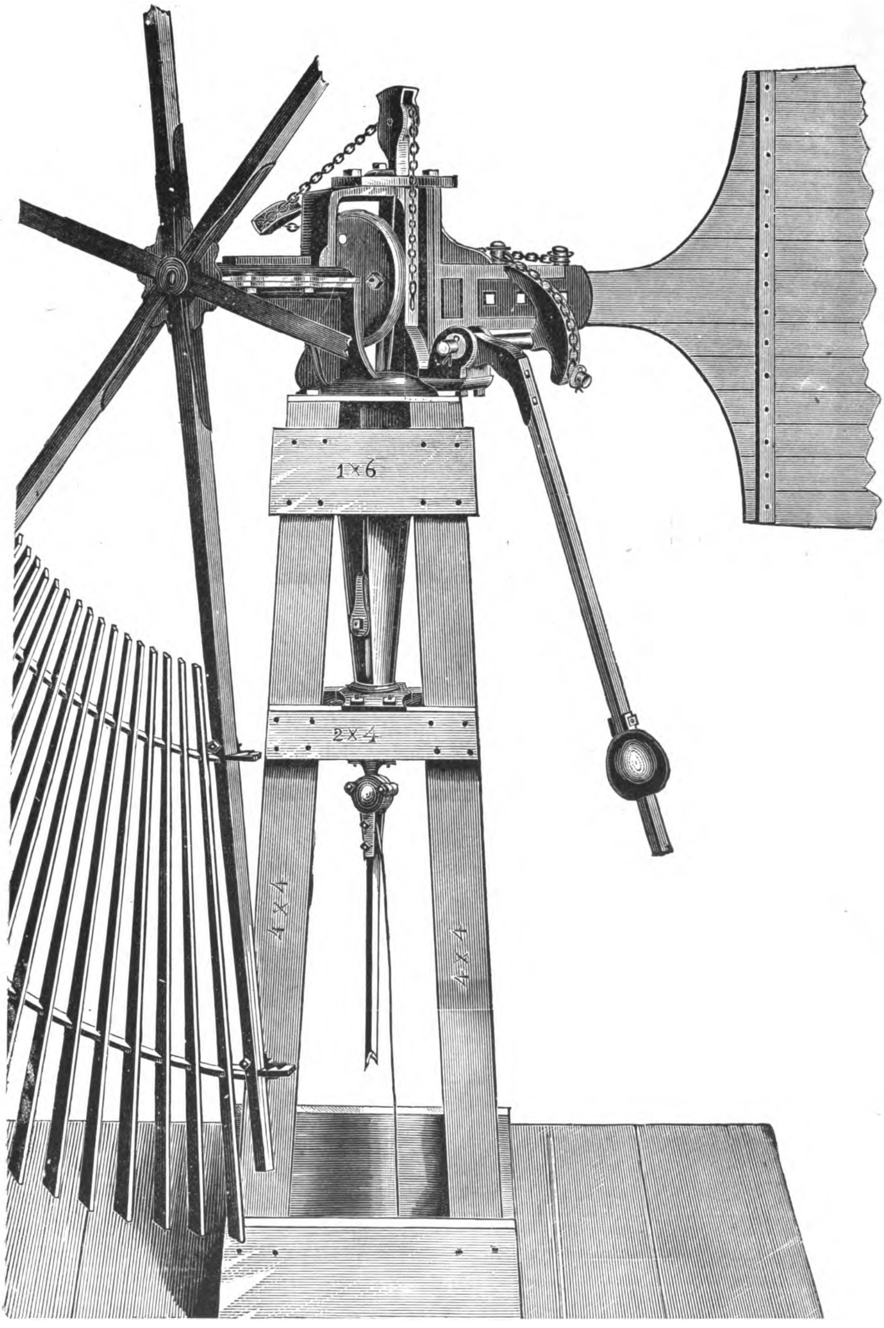

FIG. 28.

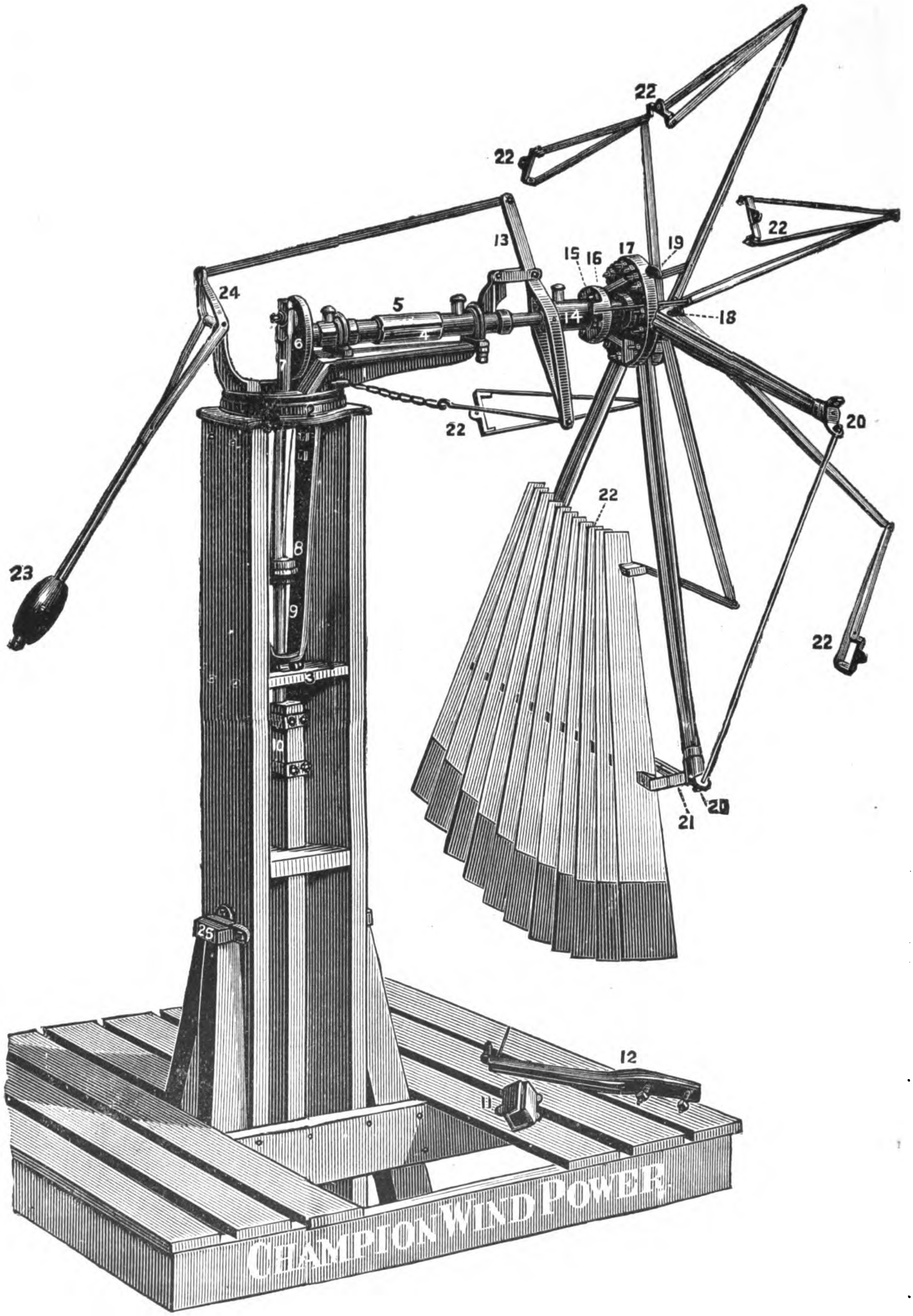
22
22
22
13
15
16
17
19
24
5
18
6
4
7
14
22
20
22
8
23
9
22
10
21
20
25
12
11
CHAMPION WIND POWER.

FIG. 29.

distance between the planes of the rudder and of the shaft increases with the size of mill.

This enables a speedier getting-out of the wind, inasmuch as a larger portion of the wheel stands off from the centre line of the rudder; but it has the disadvantage of the wheel never being fully in the wind. This wheel runs to the left, while all other mills run to the right.

The Champion Windmill.

Fig. 29 illustrates a ten-foot pumping-mill, in which there is no rudder. This mill, known as the Champion, is manufactured by Messrs. Powell & Douglas, Waukegan, Ill. The regulation of the extent of surface is on the centrifugal-governor plan. The mill is brought into the direction of the wind by the natural tendency of the wheel to turn into that position; the wheel being placed behind the mast, instead of in front, as is the customary practice. Inasmuch as the face of the wheel is toward the mast, and the sections turn in the same direction, the wheel, as will be seen in Fig. 29, is a considerable distance from the axis of the mast; and consequently there is an overhang, which has a tendency to bring an unequal strain on the main bearing and turn-table. The face of the wheel being behind the mast, and most of the regulating-gear in front of the wheel, the wind is to some extent broken before it strikes the wheel.

In Fig. 29, 1 represents the turn-table; 2, the bed plate; 3, the step (two pieces); 4, main box; 5, cap of

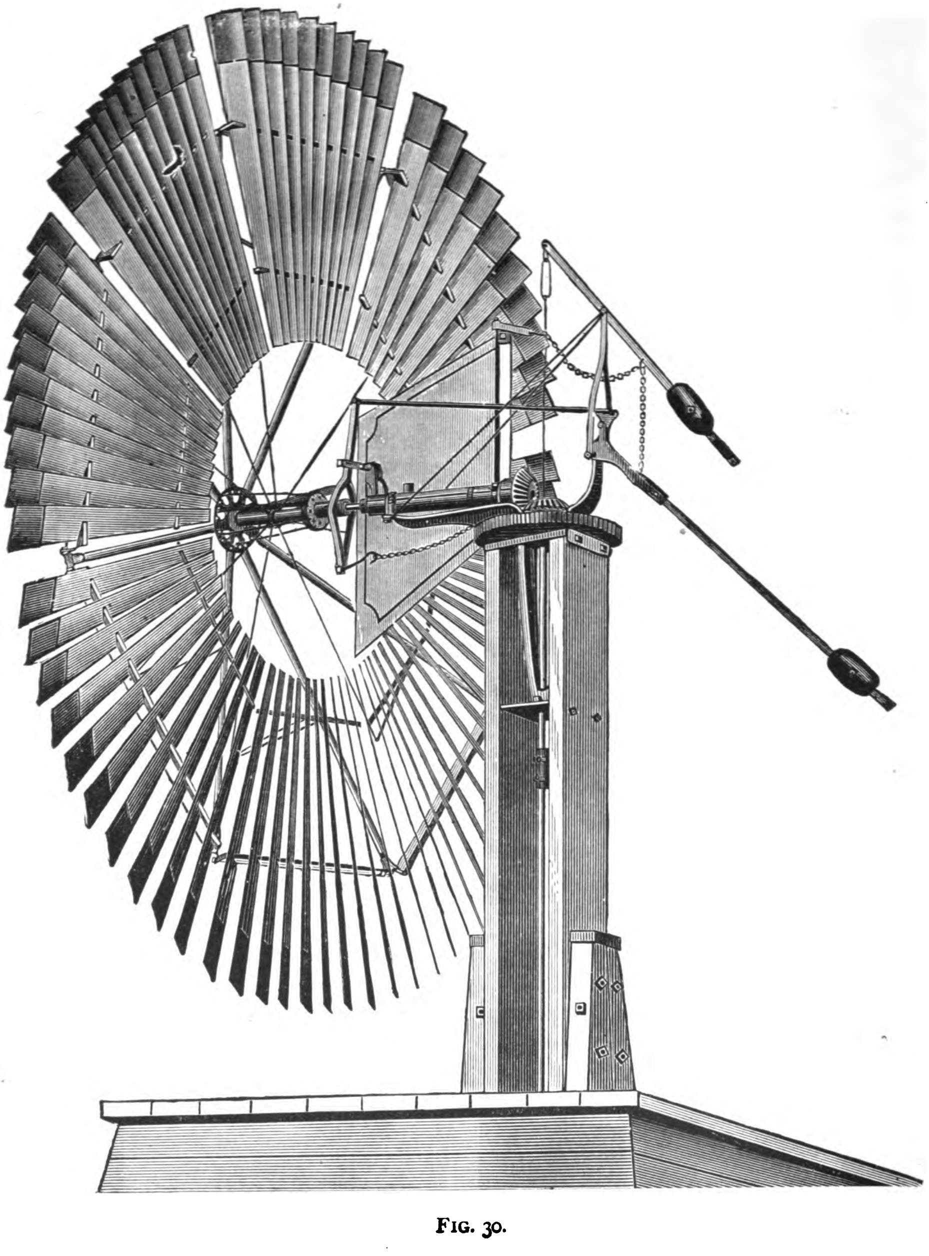

FIG. 30.

main box; 6, crank plate; 7, connecting-rod; 8, cap of connecting-rod; 9, pipe pitman; 10, pitman connection; 11, wood-rod splice; 12, pump connection; 13, twin levers; 14, slide head; 15, slide-head segments; 16, slide-head ring; 17, spider; 18, outside hub; 19, spoke shield; 20, socket on spoke end; 21, gudgeons of sails; 22, brace connection on sail; 23, governing-weight; 24, fulcrum of governing-lever; 25, tower-post weather shield.

In Fig. 30 is shown a geared wind wheel of the same type, in which a vane is placed at an angle to the centre line of the shaft. The vane is to offset the tendency of the wheel to go with the strain of the gear, and is found a necessity in geared mills of this type. It is not necessary in pumping-mills, with the crank motion, as the strain then is entirely vertical.

The Regulator Windmill.

The Regulator Windmill, manufactured by the Sandwich Enterprise Company, Sandwich, Ill., shown in Figs. 31, 32, and 33, has a solid wind wheel, but no rudder, and runs behind the mast, differing in the latter respect from all other solid wind wheels. The regulating-gear consists of a small vane on a large lever directly in front of the wheel, the vane portion projecting outside of the wheel. This vane is inclined to the plane of motion of the wheel, being set at the same angle as the slats. In addition, this vane has a projecting fan at right angles to the vane itself, so as to make the vane catch the wind

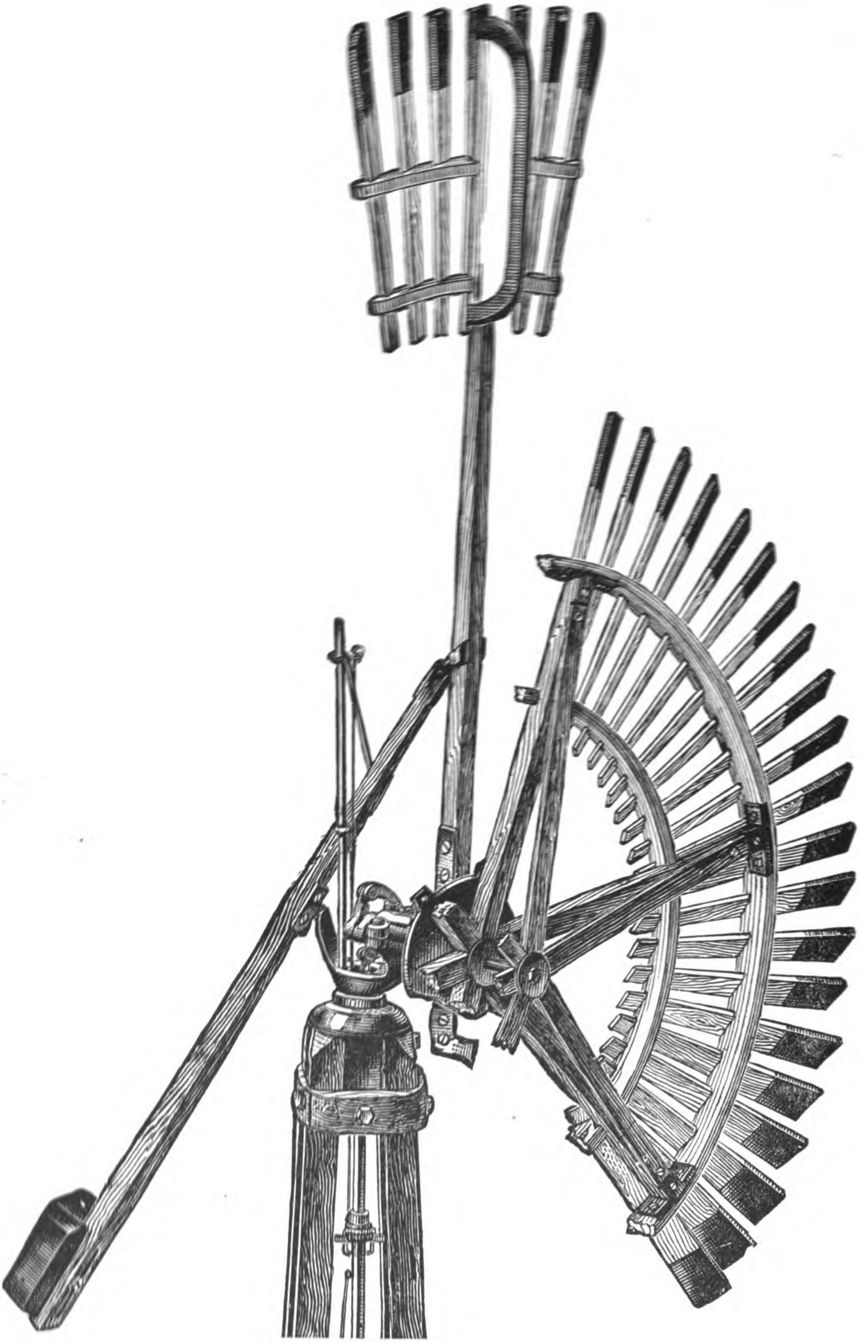

FIG. 31.

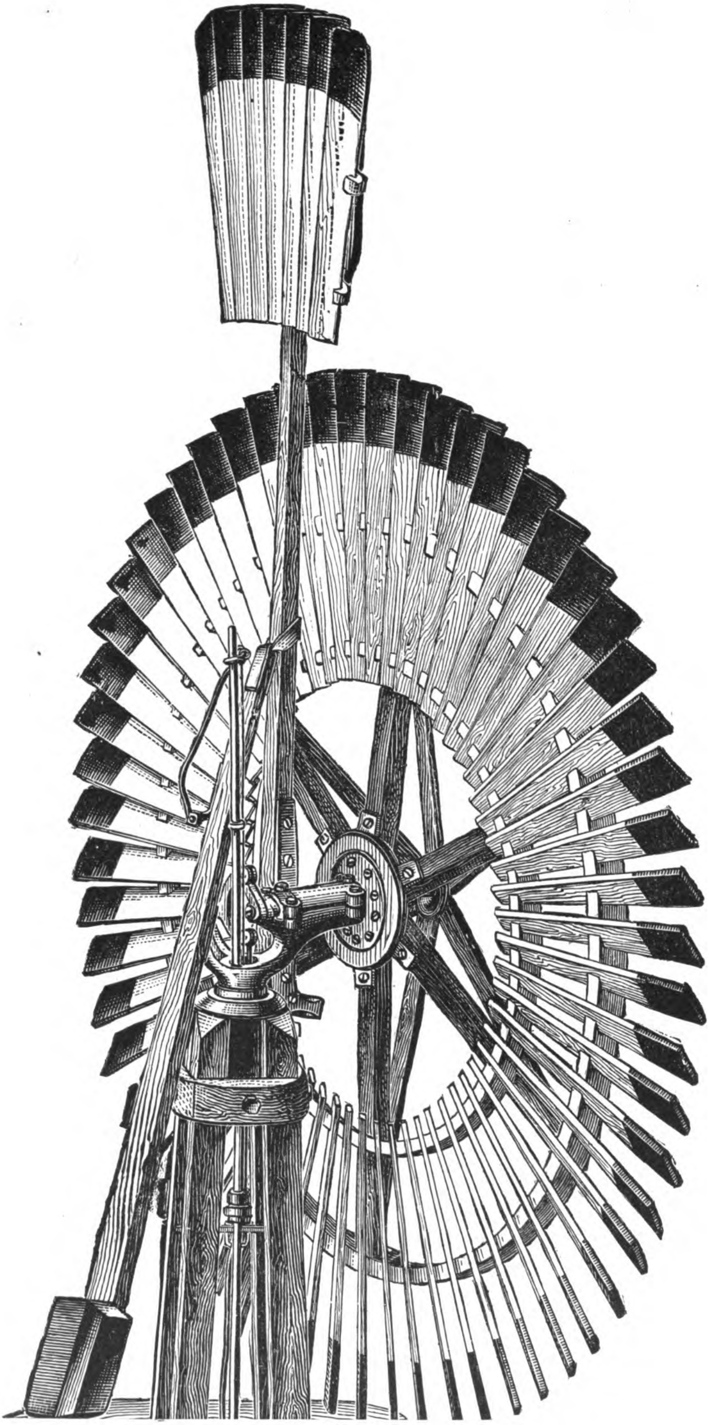

FIG. 32.

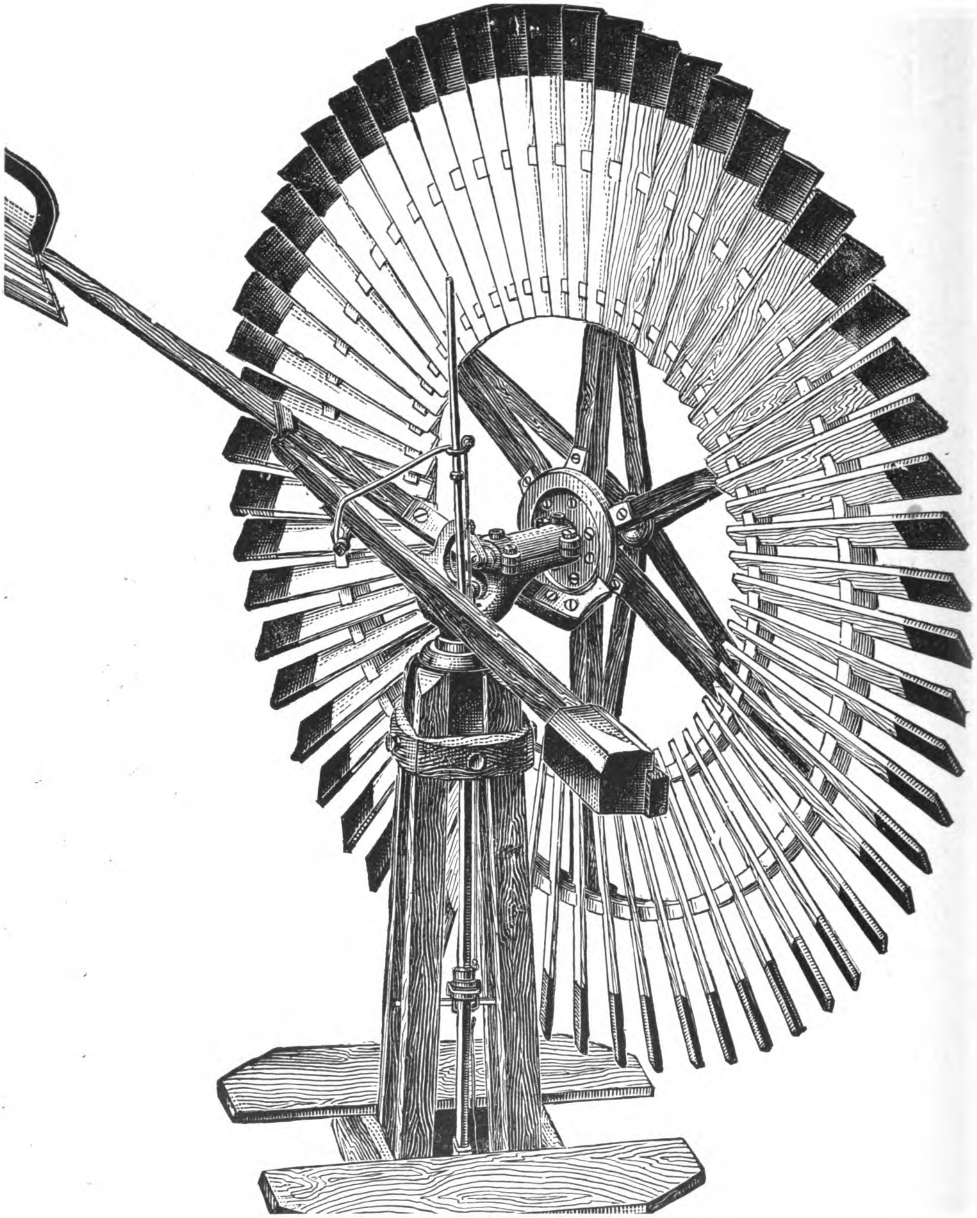

FIG. 33.

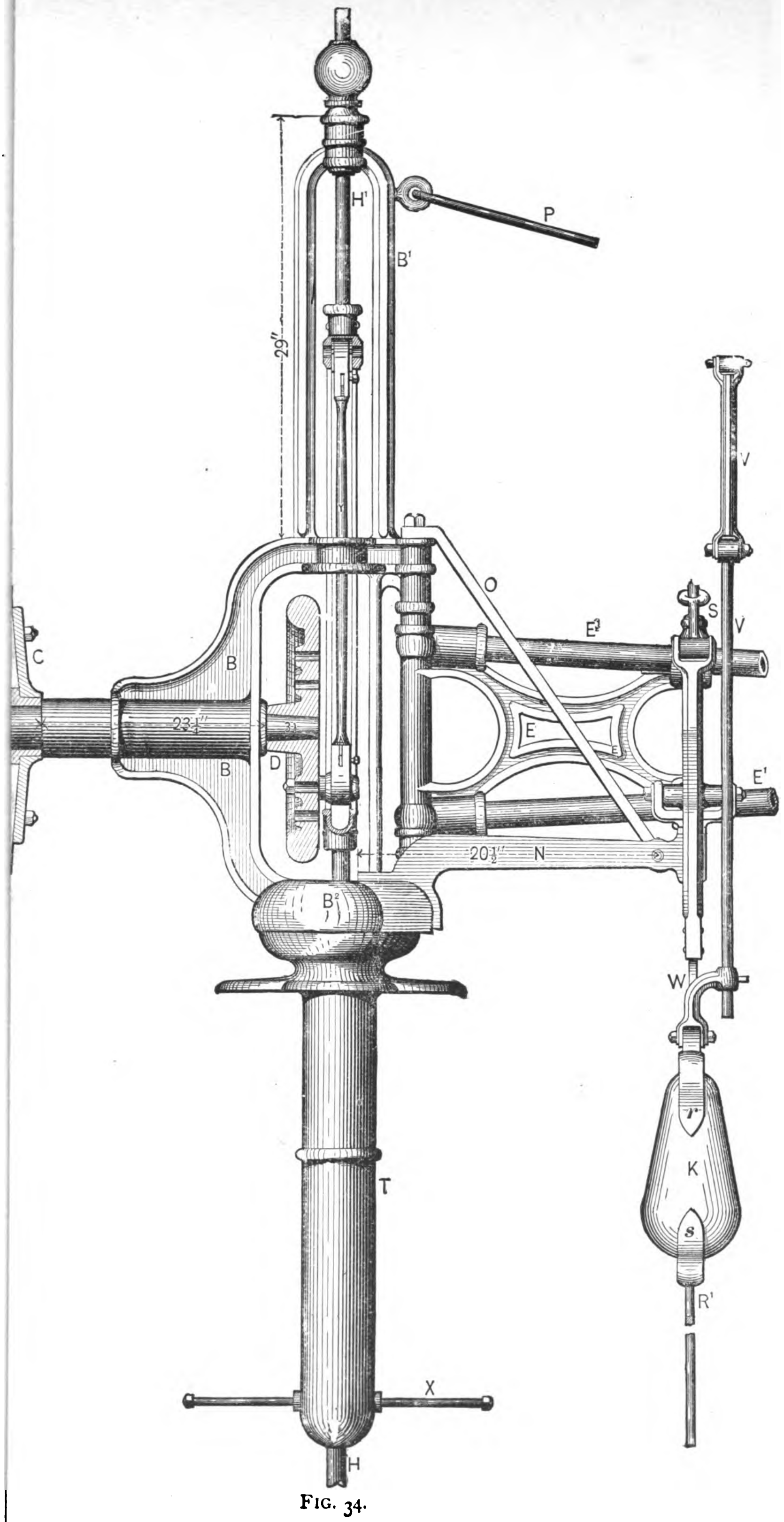

FIG. 34.

more effectively. As the velocity of wind increases, it presses with greater force against this overhanging vane, and tilts it, thereby raising a counterbalancing weight. This lowering of the overhanging vane causes the rotation of the turn-table to which it is attached, and thus brings the wheel more out of the wind. As the pressure decreases, the lowering of the counterbalancing weight again brings the wheel and the vane more into the wind. A point claimed for this windmill is the method of transferring the motion from the crank on the main shaft to the pitman which operates the pump. This consists of links and levers which give an eccentric motion, one-third of the revolution of the wheel causing the downward, and two-thirds the upward stroke. It is claimed that thus a lighter breeze moves the mill; but we confess our inability to appreciate the reasoning upon which this claim is based, while we do recognize the disadvantage of the increase of levers and joints which this motion necessitates.

The Strong Windmill.

This windmill, the design of Mr. George S. Strong of Philadelphia, belongs to the velocity-regulation type, the wheel shaft being placed slightly out of line of the plane of the rudder. Thus the pressure of the wind exerts itself to push the wheel around the turn-table to the left, which tendency is resisted by a counterbalancing weighted lever.

Referring to the accompanying cuts, Fig. 34 is a side elevation of the mill, with wheel, arms, and rudder broken off, showing the construction of wheel centre, arrangement of governor, and connections of crank. Fig. 38 is an elevation of the mill proper, showing the construction of the wheel and rudder, or vane, without any tower, which would come under the bed piece at *T*. Fig. 36 is a back elevation of Fig. 34. Fig. 39 is a section through bed piece and turn-table, showing staple connection with swivel guide. Fig. 35 is a plan showing position of vane or rudder when full in the wind, and arrangement of wire rope for shifting out of the wind when it is desired to stop the mill. The smaller pieces (Fig. 37) are clamps, and parts of wheel and rudder. *R* represents the counterbalancing lever, having a swivelled

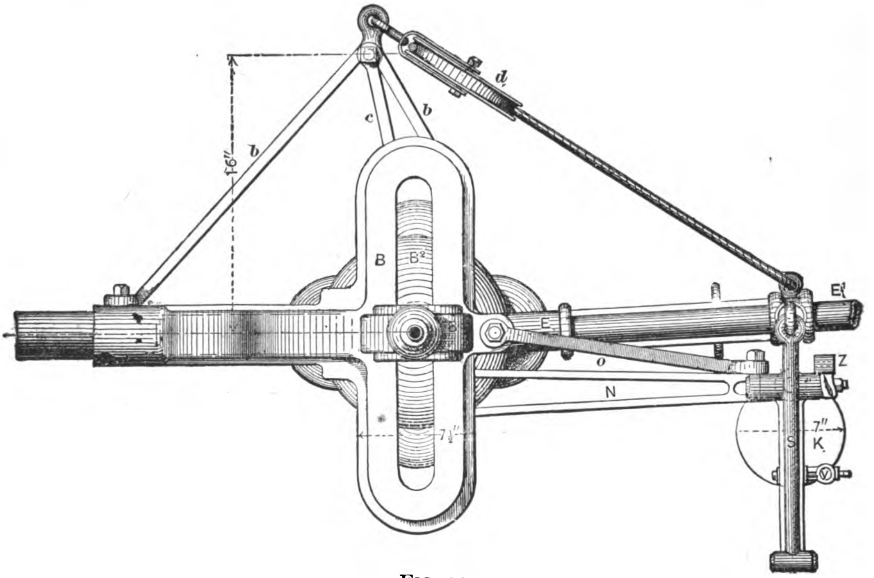

FIG. 35.

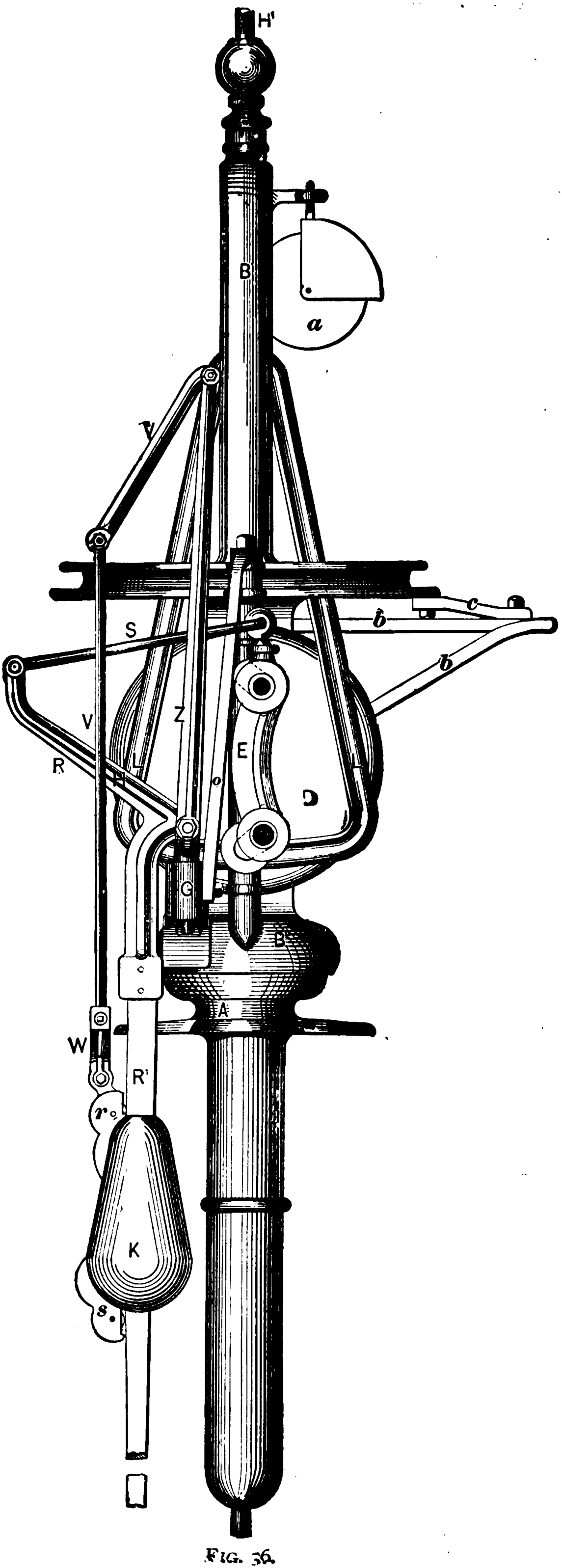

FIG. 56.

fulcrum at *G*, and coupled at its upper end by the link *S* to the rudder. The fulcrum is supported on a bracket, *N*, on the frame *B* of the mill. This lever resists the action of the wind on the wheel until the pressure is greater than what the lever is loaded for, when the wheel swings around on the turn-table, presenting its edge to the wind, or partially so. As the wheel has an increasing leverage on the governor as it swings farther around, it is necessary that there should be an increasing resistance. This is accomplished by a travelling-weight, *K*, on the lever *R*. This weight is suspended at a point above the fulcrum by the link *V*, on which it is adjustable, and

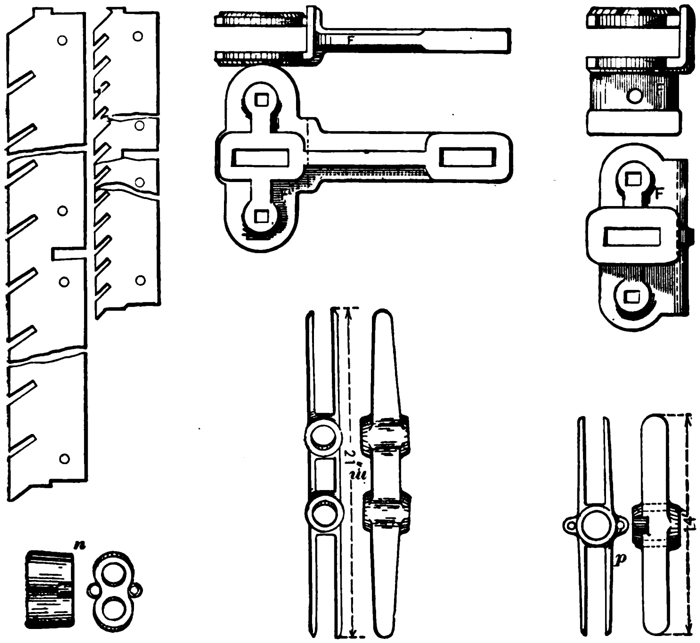

FIG. 37.

can be moved up or down, to suit the velocity at which the mill is required to run. As the lever *R* rises, this link causes the weight *K* to travel out on the lever, compensating for the positions of the wheel. The turn-table is a pivot at the bottom of the bed piece, with a collar at the top of the same, both of which are protected from the weather, and provided with abundant oil cavities. The crank is back connected and coupled through a staple to the pump rod, which is hollow, to admit of a cable passing down through it, to throw the mill out of the wind when it is desired to stop it. The staple has a swivel guide at the top, so that it cannot bind the crank pin.

The wheel consists of wrought-iron arms bent on edge back on themselves, and clamped on a double-face plate. There are twelve of these arms, with malleable iron clamps, which slip over the arms, and clamp the rims of the wheel. These rims are of hard wood, and sawed out, to receive the sails; the inner and outer rims being sawed at different angles, so as to give a screw shape to the sails. The frame of the rudder is made of gas-pipe, and trussed, and has malleable iron clamps to hold the wood cross-pieces which secure the slats.

The Leffel Windmill.

The Leffel Windmill, manufactured by the Springfield Machine Company, Springfield, O., is shown in Fig. 40. It depends for its regulation on the fact that the centre

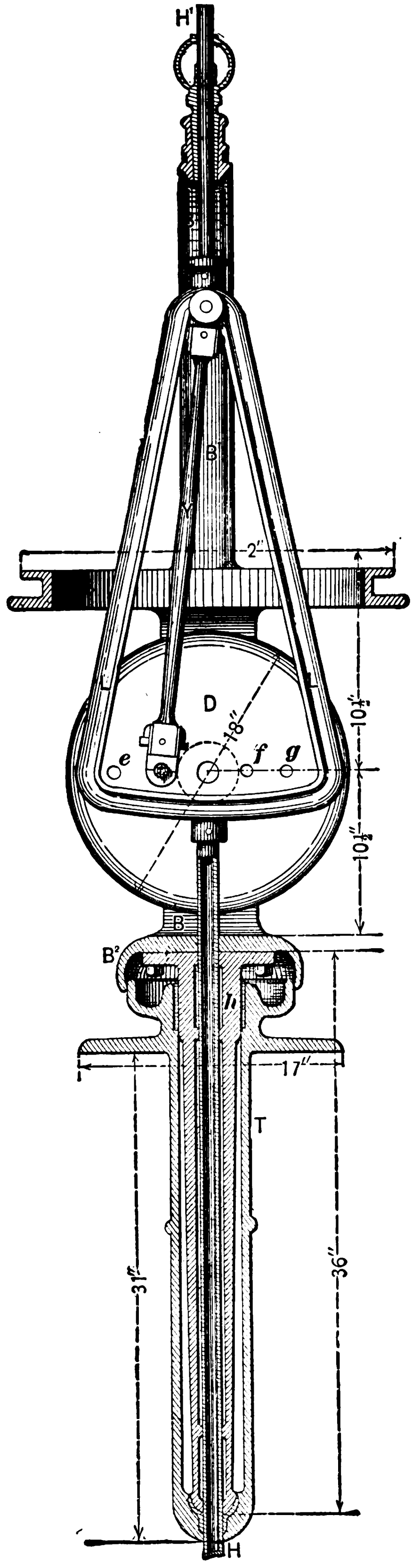

Fig. 39.

line of the wind-wheel shaft stands off somewhat from, though it is parallel to, the plane of the rudder. The wheel of the mill is a distinguishing characteristic.

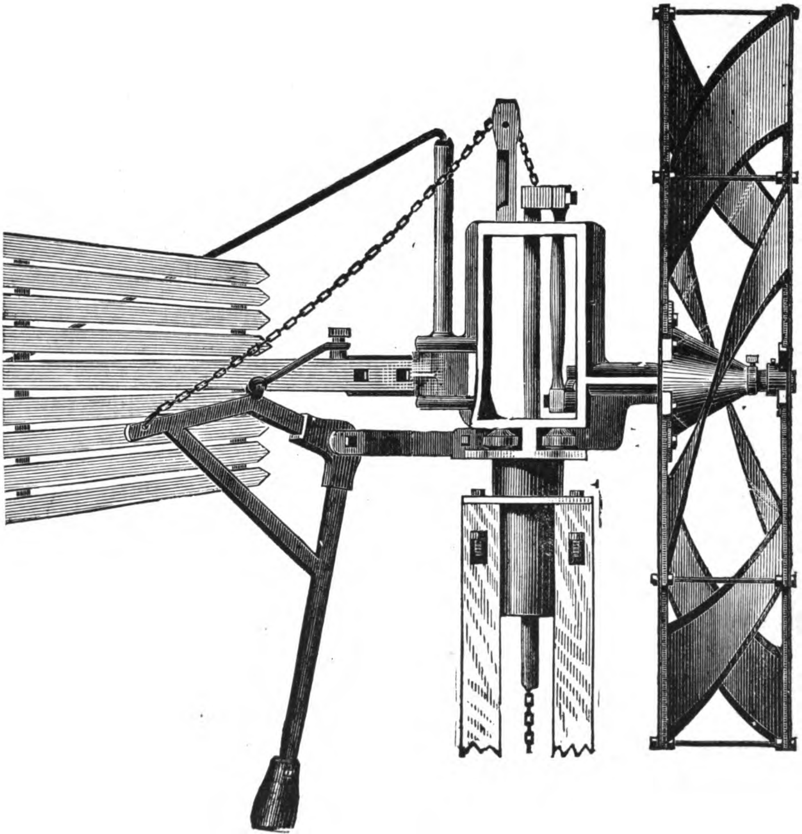

FIG. 40.

The blades, which have a helical curve, are about three feet long by two feet wide. They are made of No. 24 sheet-iron, fastened securely to curved iron ribs, and bolted to a double set of one and one-eighth by five-sixteenths inch iron arms.

CHAPTER VIII.

EXPERIMENTS ON WINDMILLS.

It is not pleasant to be obliged to make the admission, that, for experimental records of the efficiency of windmills, we must have recourse to the foreign annals of over fifty and over a hundred years ago. With the exception of the data of capacity presented in Chap. IX., which are the average records of experience rather than the results of special experiment, America has contributed no reliable* data relating to the performance and efficiency of windmills. In this chapter we will confine ourselves to an account and discussion of the experiments of Smeaton and Coulomb. Originally the intention was to reprint these papers in full; but the fact that their main import can be presented in considerably less space, and that their actual value at this time, though comparatively of moment, scarcely warrants a complete reproduction, has led to the abandonment of the first idea. This statement is made with the full knowledge, that, as a rule, these experiments are spoken of as if they were possessed of no flaw, and also in apparent conflict

---

* The author has pointed out elsewhere that the windmill tests at the Pennsylvania Agricultural Exhibition, Philadelphia, 1884, were utterly unreliable, and of no value whatever. See American Engineer, vol. 8, July 4, Oct. 17, and Dec. 26, 1884.

with the great respect which the author, like many other engineers, has gained for Smeaton and Coulomb, by a close perusal of their work in this and many other more important departments of engineering. The fact remains, however, that the angles recommended by Smeaton as the result of his trials, as being "as good as any," cannot, in the nature of things, be the most desirable angles, and that, in Coulomb's experiments, only the velocity of wind was specially recorded, while the total work performed, and that lost, were in part calculated, and in part represented average annual performances. In how far this is the case will appear in our account; and, while it is thus the author's aim to warn against the too common blind indorsement of the experiments under discussion as being final, it is equally his pleasure to commend them as the only experimental researches on record worthy of study and consideration.

The hope may here be expressed, that American windmill manufacturers may erelong see fit to institute such accurate experimental observations of the performance and efficiency of windmills as national pride should dictate, as scientific accuracy demands, and as the modern methods of scientific investigation can readily secure.

*Smeaton's Experiments.** — This series of experiments with model windmills was instituted by the great English engineer John Smeaton, to determine the best shape of sail for a given area of surface. Of one set of windmills experimented upon, the radius was 21 inches, the length of cloth 18 inches, breadth 5.6 inches; making an

---

* See Philosophical Transactions, 1755 to 1763.

area of 100.8 square inches for each sail. In the second set, there was added to each sail a triangular cloth whose base was equal to one-half the breadth, i.e., 2.8 inches, and whose height equalled 18 inches, the sail being broadest at the extremity of the radius, or whip. Thus the total area was 126 square inches. Number of arms of windmills = 4.

On account of the uncertainty of the wind, the wheel was moved, not by allowing or causing the air to move against the wheel, but by turning the axis of the wheel progressively around in the circumference of a large circle, and thus causing the revolution of the wheel by its impingement upon the air at rest. The effect was then, of course, precisely the same as if wind of a like velocity to that with which the air at rest was impinged had acted by its impulse upon the wheel. This turning of the wheel in the circumference of a large circle was effected by giving a circular motion to an upright shaft by means of a cord wound on a barrel upon the shaft, which cord was operated by the experimenter. To this shaft was framed an arm 5½ feet long, at the end of which was the seat of the windmill. The power of the wheel was measured by a scale pan attached to a fine cord, which latter wound about the shaft as it rotated, and thus raised the scale and its weights. The scale moved up and down in the direction of the upright shaft, and received no disturbance from the circular motion. The main results of his experiments are given by Smeaton in the following table, and the principal deductions therefrom are expressed in the maxims on p. 126.

TABLE VI.

EXHIBITING THE RESULTS OF NINETEEN SETS OF EXPERIMENTS ON WINDMILL SAILS OF VARIOUS STRUCTURES, POSITIONS, AND EXTENT OF SURFACE. (SMEATON.)

The Description of Sails made Use of.	No.	Angle at the Extremities.	Greatest Angle.	Turns of the Sail unloaded.	Turns of the Sail at the Maximum.	Load at the Maximum.	Greatest Load.	Product.	Extent of Surface.	Ratio of Greatest Velocity to the Velocity at the Maximum.	Ratio of Greatest Load to the Load at a Maximum.	Ratio of Surface to the Product.
		degrees.	degrees.			lbs.	lbs.		sq. in.			
Plane sails at an angle of 55° . . .	1	35	35	66	42	7.56	12.59	318	404	10 : 7.0	10 : 6.0	10 : 7.90
Plane sails weathered according to the common practice	2	12	12	-	70	6.30	7.56	441	404	-	10 : 8.3	10 : 10.10
	3	15	15	105	69	6.72	8.12	464	404	10 : 6.6	10 : 8.3	10 : 10.15
	4	18	18	96	66	7.00	9.81	462	404	10 : 7.0	10 : 7.1	10 : 10.15
Weathered according to McClaurin's method	5	9	26½	-	66	7.00	-	462	404	-	-	10 : 11.40
	6	12	29½	-	70½	7.35	-	518	404	-	-	10 : 12.80
	7	15	32½	-	63½	8.30	-	527	404	-	-	10 : 13.00
Sails weathered in the Dutch manner, tried in various positions .	8	0	15	120	93	4.75	5.31	442	404	10 : 7.7	10 : 8.8	10 : 11.00
	9	3	18	120	79	7.00	8.12	553	404	10 : 6.6	10 : 8.6	10 : 13.70
	10	5	20	-	78	7.50	8.12	585	404	-	10 : 9.2	10 : 14.50
	11	7½	29½	123	77	8.30	9.81	639	404	10 : 6.8	10 : 8.5	10 : 15.80
	12	10	25	108	73	8.69	10.37	634	404	10 : 6.8	10 : 8.4	10 : 15.70
	13	12	27	100	66	8.41	10.94	580	404	10 : 6.6	10 : 7.7	10 : 14.40
Sails weathered in the Dutch manner, but enlarged towards the extremities.	14	7½	22½	123	75	10.65	12.59	799	505	10 : 6.1	10 : 8.5	10 : 15.80
	15	10	25	117	74	11.08	13.69	820	505	10 : 6.3	10 : 8.1	10 : 16.20
	16	12	27	114	66	12.09	14.23	799	505	10 : 5.8	10 : 8.4	10 : 15.80
	17	15	30	96	63	12.09	14.78	762	505	10 : 6.6	10 : 8.2	10 : 15.10
Sails being sectors of ellipses in their best positions	18	12	22	105	64½	16.42	27.87	1059	854	10 : 6.1	10 : 5.9	10 : 12.40
	19	12	22	96	64½	18.06	-	1165	1146	10 : 5.9	-	10 : 10.10

The column marked "Product" gives the relative capacity of the mills.

In regard to the area of the sails as compared to the circular area of the wheel, Smeaton found, that, beyond a certain degree, the more the area is crowded with sail, the less effect is produced in proportion to the surface. By pursuing the experiments still farther than recorded in No. 19 of Table VI., it was found by him, that though in No. 19 the surface of all the sails together was not more than seven-eighths of the circular area containing them, yet a further addition rather diminished than increased the effect; so that, when the whole cylinder of wind is intercepted, it does not then produce the greatest effect, for want of proper interstices to escape.

SMEATON'S MAXIMS.

1. The velocity of the windmill sails, whether unloaded, or loaded so as to produce a maximum, is nearly as the velocity of the wind; their shape and position being the same.

2. The load at the maximum is nearly, but somewhat less than, as the square of the velocity of the wind; the shape and position of the sails being the same.

3. The effects of the same sails at a maximum are nearly, but somewhat less than, as the cubes of the velocity of the wind.

4. The load of the same sails at the maximum is nearly as the squares, and their effects as the cubes of their number of turns in a given time.

5. When the sails are loaded so as to produce a maximum at a given velocity of the wind, and the velocity of the wind increases, the load remaining the same: first, the increase of effect, when the increase of the velocity of the wind is small, will be nearly as the squares of those

velocities; secondly, when the velocity of the wind is double, the effects will be nearly as 10 to 27½; but, thirdly, when the velocities compared are more than double of that where the given load produces a maximum, the effects increase nearly in a simple ratio of the velocity of the wind.

6. If sails are of similar figure and position, the number of turns in a given time will be reciprocally as the radius or length of the sail.

7. The load at a maximum that sails of a similar figure and position will overcome at a given distance from the centre of motion, will be as the cube of the radius.

8. The effects of sails of similar figure and position are as the square of the radius.

9. The velocity of the extremity of Dutch sails, as well as of enlarged sails, in all their usual positions, when unloaded, or loaded to a maximum, is considerably quicker than the velocity of the wind.

In relation to these maxims, it may be said that their exactness is open to all the doubts which any experiments made on a small scale, and without a commensurate degree of accuracy, are subject to. Again: they do not convey such specific information and exact relations of the factors entering the problem as is the characteristic demand of the present time. Altogether, the author is led to attach less importance to the value of Smeaton's experiments, for the solution of the efficiency problem of the day, than is usually assigned to them.

Smeaton adds, in a note to his paper —

"I have found, by several trials in large, the following angles to answer as well as any. The radius is supposed to be divided into six parts; and one-sixth, reckoning from the centre, is called 1, the extremity being denoted 6. Nos. 1, 2, 3, 4, 5, 6, angle with the axis 72°, 71°, 72°, 74°, 77½°, 83°. Angle with the plane of motion" [angle of weather], "18°, 19°, 18° (middle), 16°, 12½°, 7° (extremity)."

These angles are those quoted in all text-books and engineering pocket-books as the *best* angles of impulse and weather, as determined by Smeaton; but it must be stated, in justice to Smeaton, that he does not term them the best angles of impulse, but simply says they "answer as well as any," possibly any that were in existence at his time. Mathematical considerations * conclusively show that the angle of impulse depends upon the relative velocity of each point of the sail and the wind, the angle growing larger as $\frac{v}{c}$ becomes greater. It will be noticed that Smeaton's angles do not fulfil this condition: the angle of impulse at No. 2 being less than at No. 1, while the velocity is twice as great; and the angle at No. 3 being the same as at No. 1, while the velocity is three times as great. Thus an important discrepancy is discovered, which should not be disregarded in a correct and impartial estimate of Smeaton's work.

Inasmuch as the best angles of impulse are dependent upon the relative velocity of the wind and of the mill, and as the velocity of the latter is to a great extent dependent upon the amount of work to be done each revolution, the determination of the best angles of impulse is of necessity a matter of special study in each particular case.

Coulomb's Experiments † are the record of careful

---

* See p. 33.

† Théorie des Machines Simples, Paris, 1821, par C. A. Coulomb.

observations made at Lille, in Flanders, to determine the average effects produced by windmills the year around. These mills, of which there were more than fifty near Lille, were of the Dutch type, and were employed in the extraction of oil from rape-seed. The following represents the main particulars of these mills: Radius of sail = 33 French feet (*pied de roi; 1 pied de roi* = $\frac{32484}{30479}$ English feet); breadth of sail = 6.2 French feet, 5.2 of which consisted of canvas covering framework; distance from axis of shaft to beginning of sail proper = 6 French feet; angle which element at this point made with the axis of the shaft = 60°; angle which element at the extremity of the sail made with the axis = 78°. In regard to these angles, which increased quite regularly from 60° to 78°, it is elsewhere shown* that they are those of maximum effect; and, indeed, Coulomb, in speaking of these mills, says, that, "by force of trial, the construction of these machines has reached a very great degree of perfection." The shaft which was inclined from 8° to 15° to the horizontal, was pierced by seven beams 42 inches long, which acted as cams for raising seven stampers twice during each revolution of the wheel. Of these 7 stampers, 5, used for pounding the rape-seed, were of oak, 21 feet long by 10 inches square, provided with an iron head 55 pounds in weight; each of the stampers weighing 1,020 pounds. The other two stampers, used to clasp and slacken the wedges extracting the oil by

---

* See p. 43.

strong compression, were of the same length, but only 6.5 inches square, and weighed 500 pounds each. At the time of the special observations herein recorded, only one of these stampers was used. The velocity of the wind was measured by light feathers, which the wind carried along. Two men, placed on a small elevation in the direction of the wind, and 150 feet from each other, observed the time required by the feathers to pass the 150 feet. Of course this method involved the possibility of a slight error in the matter of record, and presented a chance that the velocity of wind recorded differed slightly from that with which the wind actually struck the mill. The velocity of wind thus obtained was 20.5 French feet per second; the mill making 13 revolutions per minute, the four sails having all their canvas spread. The barometric pressure is not recorded. The actual mechanical effect produced in one minute equalled ($1020 \times 13 \times 10 + 500 \times 13$) pounds raised $1\frac{1}{2}$ feet, or 1,000 pounds raised 218 feet per minute. The effect lost by the shock of the cams and stampers was computed mathematically by Coulomb, and found equal to 1,000 pounds raised $16\frac{1}{2}$ feet per minute. The loss of effect by friction (obtained experimentally by giving motion to the windmill, while at rest, by the application of weights at the extremities of the sails) equalled 1,000 pounds raised $18\frac{1}{2}$ feet per minute. Therefore the total mechanical effect equalled the raising of 1,000 pounds ($218 + 16\frac{1}{2} + 18\frac{1}{2} =$)253 French feet per minute.

The above figures represent the average work of the windmills described. The velocity of the wind was the only item specially obtained by Coulomb. Great as is the value of Coulomb's record, it is meet to bear this in mind, as well as the following extract from his work: —

> "In these observations, I but followed in silence the work of the miller (*artiste*), and I did not influence any thing in his operation. I wished afterwards to have the disposition of the working of the mills, so as to vary their action; thus, I would have procured a series of experiments to establish the theory of these machines on the basis of a great number of cases. But, when the proprietors learned what use I wished to make of their machines, I could never induce them to lend me the same for a few months' experimental work."

Such data, the lack of which Coulomb deplored, are still missing; but in view of the broader views which manufacturers, in general, hold to-day in regard to the value of scientific work, and of a correct analysis and appreciation of their machines, it is not too hazardous to give expression to the belief that it will not be many years before such data are at hand.

CHAPTER IX.

THE CAPACITY AND ECONOMY OF THE WINDMILL.

The Standard of Economy. — The prime mover, which develops and furnishes the desired amount of horse-power for the least current money expense, is the most economical. It is too often forgotten, that all the separate running expenses of obtaining the power should be expressed in money values, that these should be added, and the sum regarded as the price of the power. The smaller the price for reliably furnishing the required power (or for performing the required work), the more advantageous the use of the prime mover.

A glaring example of the damage done, and the loss of money incurred, by a disregard of this standard of economy, is seen in much of the present practice of steam engineering. The amount of steam consumed per horse-power developed is too often erroneously considered the sole test of economy, and the methods of use of steam in engines made to conform to, and judged of their relative value by, this test. The author has elsewhere* pointed out some of the striking effects which

---

* **The Most Economical Point of Cut-off in Steam-Engines, by James E. Denton and Alfred R. Wolff; Transactions American Society of Mechanical Engineers,**

the more rational view of economy has on steam-engine practice, and especially in the determination of the ratios of expansion of steam in cylinders, which will secure the most economical working of the engines.

Even so great an authority as Sir William Thomson,* when he originally proposed the use of the windmill for storing electrical accumulators, urged, as a difficulty to the adoption of the same in its present state of development, that the first cost was too great. For the time being, he overlooked the fact, that *interest* † on capital, and *not capital* itself, is one, and by no means the sole item of current expense, by which the economy of prime movers should be judged.

The current expense of any prime mover, or the cost of obtaining the horse-power developed per unit of time, — which alone should form the basis of a comparison of the economy of different prime movers, — consists prin-

---

1881; American Engineer, June, July, August, and November, 1881; American Machinist, Aug. 6, 1881; Proceedings Institution of Civil Engineers, London, vol. lxviii., session 1881–82, Part II. p. 75, and vol. lxix., session 1881–82, Part III. p 44.

* Presidential address "On the Sources of Energy in Nature Available to Man for the Production of Mechanical Effect," delivered before Section A of the British Association for the Advancement of Science, 1881.

† In the same paper, Sir William Thomson, in estimating the cost of utilizing the power of the Niagara Falls for electric lighting, correctly considers the interest on first cost in determining the economical aspect of the question. The oversight, noted in the text, becomes important and worthy of mention only, inasmuch as any statement of so distinguished and justly esteemed an authority as Sir William Thomson is apt to be accepted on the basis of authority alone; and it must be added, that the great caution usually displayed by the most eminent living English physicist entitles him *prima facie* to this mark of consideration.

cipally of interest, repairs, and depreciation of plant, cost of fuel, oil, and attendance.

There are, of course, in addition, other expenses, like insurance, engineers' stores, etc., which will suggest themselves; but these are here considered of too trivial import to be taken into account. The comparative economy of the windmill and of other prime movers, detailed in this chapter, is based on the sum of the expenditures enumerated above.

The Capacity of the Windmill.—To judge of the economy of the windmill, it is necessary to be acquainted both with the items of current expense of developing the power, and with the power developed by various-sized mills, when driven by wind of specified average velocity. It is to be regretted that there are not in existence such serviceable data relating to capacity, obtained by dynamometrical measurement of the actual horse-power of the mill, and by simultaneous anemometrical measurement of the actual velocity of wind. With the exception of the experiments already referred to,* no direct accurate measurement of the horse-power developed has been published; and said results are not complete enough for our purpose.

Fortunately, however, the author is enabled to present reliable average performances, expressed in pumping capacity or effect, of various sizes of a standard type of American windmill.

Some eight years ago one of the most prominent

---

* See the experiments of Smeaton and Coulomb, pp. 123, 128.

windmill manufacturers* came to the author with a few scattered data of actual performances of his mills, which, however, were sufficient, by means of deductions and analogy from theoretical principles, to warrant the preparation of Table VII., given on p. 136. From the quantity of water raised to the specified direct elevation, it is, of course, an easy matter to calculate the corresponding horse-power; but it should be remembered that there is a loss by the friction of the water in the pipes, so that a slightly greater horse-power can be relied upon where the windmill is used direct for power purposes. Inasmuch as the present principal application of windmills is for pumping, the table of capacity, in the form presented, will be found of the greatest use in practice.

Since the preparation of Table VII., over fifteen hundred windmills have been sold on its guaranty; and in all cases the actual results obtained, both in this country and elsewhere, did not vary sufficiently from those presented to cause any complaint whatever, — a proof that the results as tabulated are correct, or certainly not too high. If it be claimed that the horse-power developed appears small,† from the stand-point of a (false) prevalent popular opinion, it should be observed, in response, that the actual results noted in the table are in close agreement with those obtained by theoretical analysis

---

* Mr. A. J. Corcoran. For description of the mill, see p. 78.

† Coulomb, in his experiments with a windmill of four sails seventy feet in diameter, breadth of sails six and five-eighths feet, the wind blowing at a velocity of fifteen miles per hour, obtained an actual useful result equivalent to about seven-horse power. See p. 130.

of the impulse of wind upon windmill blades. The manufacturer's own observations during the past eight years have led him to conclude that they are correct. A careful examination of a number of claims of the development of greater horse-powers with the same velocity of wind, led to the discovery that such claims did not rest on a safe basis. In not a few cases, and even in catalogues of foreign windmill manufacturers, the nominal horse-power stated far exceeded those in Table VII.; while the actual pumping effect recorded, as found in practice, was considerably below that noted in the table: showing a lamentable discrepancy, and the worthlessness of the claim of a horse-power exceeding that theoretically possible.

TABLE VII.

SHOWING CAPACITY OF THE WINDMILL.

1	2	3	4	5	6	7	8	9	10	11	12
	Designation of Mill.	Velocity of Wind, in Miles per Hour.	Revolutions of Wheel.	Gallons of Water Raised per Minute to an Elevation of						Equivalent Actual Useful Horse-Power Developed.	Average Number of Hours per Day during which this Result will be Obtained.
				25 feet.	50 feet.	75 feet	100 feet.	150 feet.	200 feet.		
I.	8½-ft. wheel	16	70 to 75	6.162	3.016	-	-	-	-	0.04	8
II.	10-ft. wheel	16	60 to 65	19.179	9.563	6.638	4.750	-	-	0.12	8
III.	12-ft. wheel	16	55 to 60	33.941	17.952	11.851	8.485	5.680	-	0.21	8
IV.	14-ft. wheel	16	50 to 55	45.139	22.569	15.304	11.246	7.807	4.998	0.28	8
V.	16-ft. wheel	16	45 to 50	64.600	31.654	19.542	16.150	9.771	8.075	0.41	8
VI.	18-ft. wheel	16	40 to 45	97.682	52.165	32.513	24.421	17.485	12.211	0.61	8
VII.	20-ft. wheel	16	35 to 40	124.950	63.750	40.800	31.248	19.284	15.938	0.78	8
VIII.	25-ft. wheel	16	30 to 35	212.381	106.964	71.604	49.725	37.349	26.741	1.34	8

These windmills are made in regular sizes, as high as sixty-foot diameter of wheel; but the experience with the larger class of mills is still too limited at this date to enable the presentation of precise data as to their performance.

If the wind can be relied upon in exceptional localities to average a higher velocity for eight hours a day than that stated in the above table, the performance or horse-power of the mill will be increased, and can be obtained by multiplying the figures in the table by the ratio of the cube of the higher average velocity of wind to the cube of the velocity above recorded.

*Economy of the Windmill.** — The standard of economy of prime movers having already been defined, it is only necessary to particularize, that in windmills the cost of fuel is zero, wind being a free gift of nature, and that the attendance required for the leading American types of self-regulating windmills amounts only to filling the oil-cups three or four times a month, work which any one can attend to in a few minutes. If any account is to be taken of this service, an allowance of fifteen cents a month would really be quite extravagant. In the following table such allowance has been made. Experience has shown that the repairs and depreciation items, jointly, are amply covered by five per cent per an-

---

* Note on the Economy of the Windmill as a Prime Mover, by Alfred R. Wolff; Transactions American Society of Mechanical Engineers, 1882; Engineering, Aug. 18, 1882; American Engineer, April 22, 1882; Journal of the Franklin Institute, July, 1882; Proceedings Institution of Civil Engineers (London), vol. lxx., session 1881–82, Part IV.

num. Interest is calculated at five per cent per annum. The oil used is a very small quantity, — a few gallons per year, — and is allowed for in the table according to the size of mill. All the items of expense, including both interest and repairs, are reduced to the hour by dividing the costs per annum by 365 × 8 = 2920; the interest, etc., for the twenty-four hours being charged to the eight hours of actual work. By multiplying the figures in column 6 by $\frac{365 \times 8}{100 \times 0.05} = 584$, the first cost of the windmill, in dollars, is obtained.

TABLE VIII.

SHOWING ECONOMY OF THE WINDMILL.

1	2	3	4	5	6	7	8	9	10	11
	DESIGNATION OF MILL.	Gallons of Water Raised 25 Feet per Hour.	Equivalent Actual Useful Horse-Power Developed.	Average Number of Hours per Day during which this Quantity will be Raised.	EXPENSE OF ACTUAL USEFUL POWER DEVELOPED, IN CENTS, PER HOUR.					Expense per Horse-Power, in Cents, per Hour.
					For Interest on First Cost (First Cost, including Cost of Windmill, Pump, and Tower, 5 per Cent per Annum).	For Repairs and Depreciation (5 per Cent of First Cost per Annum).	For Attendance.	For Oil.	Total.	
I.	8½-ft. wheel	370	0.04	8	0.25	0.25	0.06	0.04	0.60	15.0
II.	10-ft. wheel	1151	0.12	8	0.30	0.30	0 06	0.04	0 70	5.8
III.	12-ft. wheel	2036	0.21	8	0.36	0 36	0 06	0.04	0.82	3.9
IV.	14-ft wheel	2708	0.28	8	0.75	0.75	0.06	0.07	1.63	5.8
V.	16-ft wheel	3876	0.41	8	1.15	1.15	0.06	0.07	2.43	5.9
VI.	18-ft. wheel	5861	0.61	8	1.35	1.35	0.06	0.07	2.83	4.6
VII.	20-ft. wheel	7497	0.79	8	1.70	1.70	0.06	0.10	3.56	4.5
VIII.	25-ft. wheel	12743	1.34	8	2.05	2.05	0.06	0.10	4.26	3.2

The number of gallons pumped by the thirty-foot and thirty-five foot mills and larger sizes, and the economy of the mills, are not stated in the above table; for the number of larger mills in operation is not sufficient to insure authentic precision of the results obtained. The performance of the thirty-foot mill, as far as observed, seems to gravitate to a pumping capacity equivalent to 2.4-horse power, and to an expense of 2.5 cents per horse-power per hour.

The Economy of Steam-Pumps. — In order to ascertain the relative value of the windmill, its economy must be compared with that of other prime movers. Accordingly, the author has taken pains to secure from the more prominent manufacturers actual data of cost, durability, running-expenses, and the like, of the several types of steam-pumps of same actual pumping capacity as the sizes of windmills mentioned in Table VIII. On these data, as a basis, he has prepared Table IX., showing the economy of steam-pumps, being careful that the data selected, and the results obtained, should represent the best rather than average practice.

Relative Economy of the Windmill and Steam-Pump. — By comparison of the figures in Column 11 of Table VIII. and in Column 23 of Table IX., it appears, that, even presuming the steam-pump to require no extra boiler capacity, and no attendance whatever (or that no extra expense is attached to extra attendance and boiler capacity), the windmill is by far the most economical prime mover. Averaging the several results, its economy may be said to be about 1.5 times that of the steam-pump when no charge is made for attendance and boiler capacity for the latter prime mover.

TABLE IX. — CONCLUDED.

	23	24	25	26	27	28	29	30	31	32	33	34
	EXPENSE PER HORSE-POWER, IN CENTS PER HOUR.											
	For Interest, Repairs, Depreciation, Coal and Oil, but no Attendance; Pump without Boiler.	For Interest, Repairs, Depreciation, Coal and Oil, but no Attendance; Pump and Independent Boiler.	For Interest, Repairs, Depreciation, Coal and Oil, and Attendance of 1 Man at 18.75 Cents per Hour; Pump and Independent Boiler.	For Interest, Repairs, Depreciation, Coal and Oil, and 1/2 Time of Attendant at 18.75 Cents per Hour; Pump and Independent Boiler.	For Interest, Repairs, Depreciation, Coal and Oil, and 1/3 Time of Attendant at 18.75 Cents per Hour; Pump and Independent Boiler.	For Interest, Repairs, Depreciation, Coal and Oil, and 1/4 Time of Attendant at 18.75 Cents per Hour; Pump and Independent Boiler.	For Interest, Repairs, Depreciation, Coal and Oil, and 1/5 Time of Attendant at 18.75 Cents per Hour; Pump and Independent Boiler.	For Interest, Repairs, Depreciation, Coal and Oil, and 1/6 Time of Attendant at 18.75 Cents per Hour; Pump and Independent Boiler.	For Interest, Repairs, Depreciation, Coal and Oil, and 1/7 Time of Attendant at 18.75 Cents per Hour; Pump and Independent Boiler.	For Interest, Repairs, Depreciation, Coal and Oil, and 1/8 Time of Attendant at 18.75 Cents per Hour; Pump and Independent Boiler.	For Interest, Repairs, Depreciation, Coal and Oil, and 1/9 Time of Attendant at 18.75 Cents per Hour; Pump and Independent Boiler.	For Interest, Repairs, Depreciation, Coal and Oil, and 1/10 Time of Attendant at 18.75 Cents per Hour; Pump and Independent Boiler.
I.	11.0	25.5	494.3	259.8	181.8	142.8	119.3	103.8	91.8	84.00	77.50	**72.50**
II.	9.1	14.1	170.3	92.2	66.2	53.2	45.3	40.2	36.2	33.58	31.42	**29.75**
III.	7.6	10.4	99.7	55.0	40.1	32.7	28.2	25.3	23.0	21.52	20.29	**19.33**
IV.	7.0	9.7	76.6	43.1	32.0	26.4	23.1	20.9	19.1	18.04	17.17	**16.36**
V.	6.1	8.0	53.7	30.8	23.2	19.4	17.1	15.6	14.4	13.68	13.05	**12.56**
VI.	5.5	7.0	37.8	22.4	17.3	14.7	13.2	12.2	11.4	10.89	10.46	**10.13**
VII.	5.1	6.4	30.2	18.3	14.3	12.4	11.2	10.4	9.8	9.39	9.06	**8.81**
VIII.	4.3	5.0	19.0	12.0	9.7	8.5	7.8	7.4	7.0	6.78	6.59	**6.44**

In the above table, the interest, as well as the repairs and depreciation, are charged to the eight hours of actual work by dividing these costs per annum by 365 × 8 = 2920.

To find the first cost, in dollars, of steam-pump without boiler, the figures in column 5 should be multiplied by $\frac{365 \times 8}{100 \times 0.05} = 584$. To find the first cost, in dollars, of steam-pump and independent boiler, the figures in column 7 should be multiplied by 584.

TABLE IX.

SHOWING ECONOMY OF STEAM-PUMPS.

1	2	3	4	5	6	7	8	9	10	11	12	13	14	15	16	17	18	19	20	21	22
				EXPENSE OF ACTUAL USEFUL POWER DEVELOPED, IN CENTS PER HOUR.																	
	Gallons of Water Raised 25 Feet per Hour.	Equivalent Actual Useful Horse-Power Developed.	Pounds of Coal Consumed per Horse-Power of Useful Pumping Effect per Hour.	For Interest, 5 per Cent of First Cost; Pump without Boiler.	For Repairs and Depreciation, 5 per Cent of First Cost; Pump without Boiler.	For Interest, 5 per Cent of First Cost; Pump and Independent Boiler.	For Repairs and Depreciation, 5 per Cent of First Cost; Pump and Independent Boiler.	For Coal, $5 per Ton of 2,000 Pounds.	For Oil.	For Interest, Repairs, Depreciation, Coal and Oil, but no Attendance; Pump without Boiler.	For Interest, Repairs, Depreciation, Coal and Oil, but no Attendance; Pump and Independent Boiler.	For Interest, Repairs, Depreciation, Coal and oil, and Attendance of 1 Man at 18.75 Cents per Hour; Pump and Independent Boiler.	For Interest, Repairs, Depreciation, Coal and Oil, and 1/2 Time of Attendant at 18.75 Cents per hour; Pump and Independent Boiler.	For Interest, Repairs, Depreciation, Coal and Oil, and 1/3 Time of Attendant; Pump and Independent Boiler.	For Interest, Repairs, Depreciation, Coal and Oil, and 1/4 Time of Attendant; Pump and Independent Boiler.	For Interest, Repairs, Depreciation, Coal and Oil, and 1/5 Time of Attendant; Pump and Independent Boiler.	For Interest, Repairs, Depreciation, Coal and Oil, and 1/6 Time of Attendant; Pump and Independent Boiler.	For Interest, Repairs, Depreciation, Coal and Oil, and 1/7 Time of Attendant; Pump and Independent Boiler.	For Interest, Repairs, Depreciation, Coal and Oil, and 1/8 Time of Attendant; Pump and Independent Boiler	For Interest, Repairs, Depreciation, Coal and Oil, and 1/9 Time of Attendant; Pump and Independent Boiler.	For Interest, Repairs, Depreciation, Coal and Oil, and 1/10 Time of Attendant; Pump and Independent Boiler.
I. . .	370	0.04	15	0.17	0.17	0.41	0.41	0.15	0.05	0.44	1.02	19.77	10.39	7.27	5.71	4.77	4.15	3.67	3.36	3.10	2.90
II. . .	1151	0.12	14	0.30	0.30	0.60	0.60	0.42	0.07	1.09	1.69	20.44	11.06	7.94	6.38	5.44	4.82	4.34	4.03	3.77	3.57
III. .	2036	0.21	14	0.39	0.39	0.68	0.68	0.73	0.09	1.68	2.18	20.93	11.55	8.43	6.87	5.93	5.31	4.83	4.52	4.26	4.06
IV. .	2708	0.28	14	0.43	0.43	0.81	0.81	0.98	0.11	1.95	2.71	21.46	12.08	8.96	7.40	6.46	5.84	5.36	5.05	4.78	4.58
V. . .	3876	0.41	13	0.51	0.51	0.90	0.90	1.33	0.14	2.49	3.27	22.02	12.64	9.52	7.96	7.02	6.40	5.92	5.61	5.35	5.15
VI. .	5861	0.61	13	0.60	0.60	1.07	1.07	1.98	0.18	3.36	4.30	23.05	13.67	10.55	8.99	8.05	7.43	6.95	6.64	6.38	6.18
VII. .	7497	0.79	13	0.64	0.64	1.15	1.15	2.57	0.21	4.06	5.08	23.83	14.45	11.33	9.77	8.83	8.21	7.73	7.42	7.16	6.96
VIII. .	12743	1.34	12	0.77	0.77	1.24	1.24	4.02	0.25	5.81	6.75	25.50	16.12	13.00	11.44	10.50	9.88	9.40	9.09	8.83	8.63

As a fact, however, steam-pumps do require extra boiler capacity, and some attendance.

A comparison of Column 11 of Table VIII. and of Column 24 of Table IX. shows, that, allowing for an independent steam-boiler, but for no attendance for the steam-pump, the economy of the windmill averages about 1.75 times that of the steam-pump.

A comparison of Column 11 of Table VIII. and of Column 34 of Table IX. shows that the economy of the windmill averages about 2.25 times that of the steam-pump, when there is included for the latter a charge for boiler capacity, and for the services of one-tenth of the time of one man. Of course, the exact relative economy of the windmill and steam-pump can be obtained for each special desired pumping effect by dividing the corresponding figure in Column 23 to Column 34 of Table IX., respectively, as the case may be, by the corresponding figure in Column 11 of Table VIII.

It should be remembered that the tankage required by a windmill should be equivalent to two, or better three days' average daily consumption of water, which is larger than necessary to meet the demands when a steam-pump is used. But the extra cost involved is not sufficient to change the standing of the economy of the windmill as compared to that of the steam-pump, though its tendency is to decrease its ratio of superiority. The question of cost of tank has not entered the above comparison; since the tankage required is to a great extent a matter of individual discretion, and dependent, too, on ever-varying local conditions and considerations.

It is, however, an easy matter, if desired, to include it in a comparison of the economy of the two prime movers in any special case. All that is necessary is, to divide the first cost, in dollars, of tank required for given pumping effect of steam-pump, by 584; and the figure thus obtained should be added respectively to the figures in Columns 11 to 22, Table IX., and the corresponding figure in Column 3, divided by the respective sums. Thus will be obtained "the expense per horse-power, in cents per hour," denoted respectively by Columns 23 to 34 for the special conditions stated, inclusive of tankage required.

Similarly, dividing the first cost, in dollars, of tank required for given pumping effect of windmill, by 584, the figure thus obtained should be added to Column 10 of Table VIII., and the corresponding figure in Column 4 be divided by the sum: the result will be the "expense per horse-power, in cents per hour," for the windmill, inclusive of tankage required.

The ratio of the figures thus obtained for the windmill and steam-pump will define the relative economy of the two prime movers, the necessary tankage for each being included in the comparison.

Relative Economy of the Windmill and Ericsson's Hot-air Engine. — The following table, based on data of cost, consumption of fuel, and the like, published by the manufacturers, has been prepared on the same principles and advantageous footing characterizing the table of "Economy of Steam-Pumps."

TABLE X.

SHOWING ECONOMY OF ERICSSON'S HOT-AIR ENGINE.

1	2	3	4	5	6	7	8	9
	Gallons of Water Raised 50 Feet per Hour.	Equivalent Actual Useful Horse-Power Developed.	EXPENSE OF ACTUAL USEFUL POWER DEVELOPED, IN CENTS PER HOUR.					Expense per Horse-Power, in Cents per Hour.
			For Interest 5% of First Cost.	For Repairs and Depreciation, 5% of First Cost.	For Coal, $5 per Ton of 2,000 Lbs.	For Oil.	Total.	
I.	200	0.042	*0.34	0.34	0.63	0.05	1.36	32.38
II.	350	0.074	*0.43	0.43	0.83	0.05	1.74	23.51
III.	800	0.169	*0.57	0.57	1.50	0.06	2.70	15.98
IV.	1600	0.337	*0.86	0.86	3.00	0.10	4.82	14.30

A comparison of Column 11 of Table VIII. and of Column 9 of Table X. reveals the fact, that the economy of the windmill averages about three times that of the Ericsson hot-air engine, when no charge for attendance is made for the latter. Where gas is used, the cost for fuel is somewhat greater than that above recorded; but the attendance then practically costs nothing.

Relative Economy of the Windmill and the Gas-Engine. — A gas-engine developing 1.34 actual useful horse-power, a performance equivalent to that of the 25-foot windmill raising 12,743 gallons of water 25 feet per

---

* Multiplying this figure by 584 gives first cost of prime mover in dollars.

hour, includes in its operation the following minimum expenses: —

For interest, 5% on first cost	0.80*	cent per hour.
For repairs and depreciation, 5% on first cost,	0.80	" " "
For oil	0.40	" " "
For gas	8.00	cents " "
Total	10.00	cents per hour.

Expense of gas-engine per horse-power per hour, 7.5 cents.

A comparison of this figure with 3.2 of Column 11 of Table VIII. shows, that, even making no allowance for attendance in the running of the gas-engine, the windmill is more than 2.25 times as economical as a prime mover.

The comparison instituted in this chapter clearly and conclusively proves that at the present time windmills are the most economical prime movers for the purposes outlined in the Introduction of this work, and for powers and pumping-effects ranging from zero to 2.4-horse power. The superior economy still maintains, for an average pumping-effect equivalent to eight-horse power, the highest power developed for an average of eight hours per day by the largest-sized windmills designed in America. The usual range is from $\frac{1}{25}$ to 4 horse power, the latter being developed by a mill of about 40-foot diameter of wheel.

---

* Multiplying this figure by 584 gives first cost of prime mover in dollars.

CHAPTER X.

USEFUL DATA IN CONNECTION WITH WINDMILL PRACTICE.

In this chapter it is intended to supply some additional formulæ, rules, tables, and facts, which may prove convenient in the practical application of windmills, more especially for pumping-purposes.

Allowance for Friction of Water in Pipes.

The work required to overcome the friction of the water in its passage through the pipes must be allowed for in determining the proper size of windmill to be provided. The readiest way to express this friction is in terms of the head of water required to overcome it. Thus, if a given quantity of water per minute is to be raised vertically 50 feet, but has to travel several hundred feet through a given-sized pipe in the process of raising, the power required will have to equal the raising of the same quantity of water per minute, say 54, or 56, or 60 feet, as the case may be. The extra head can be found approximately by the use of the following data, adapted for the purpose from Weisbach's "Mechanics," vol. 2, Coxe's edition, p. 868, *et seq.*:—

The extra head in feet equals

$$h = \frac{0.1865 l \times v \times v}{d} \times f, \qquad \text{(I.)}$$

in which l = length of pipe in feet,

d = internal diameter of pipe in inches,

$$v = \frac{183.34 \times Q}{d \times d}, \qquad \text{(II.)}$$

Q = cubic feet of water raised per second,

d = diameter of pipe in inches, and

f =

0.0686 when v = 0.10,
0.0527 " " = 0.20,
0.0457 " " = 0.30,
0.0415 " " = 0.40,
0.0387 " " = 0.50,
0.0365 " " = 0.60,
0.0349 " " = 0.70,
0.0336 " " = 0.80,
0.0325 " " = 0.90,
0.0315 " " = 1.00,
0.0297 " " = 1.25,
0.0284 " " = 1.50,
0.0265 " " = 2.00,
0.0243 " " = 3.00,
0.0230 " " = 4.00,
0.0214 " " = 6.00,
0.0205 " " = 8.00,
0.0193 " " = 12.00,
0.0182 " " = 20.00.

An example will best show the use of these data.

Let it be required to raise 125 cubic feet of water per hour 25 feet, forcing the water through 500 feet of

2-inch pipe; how many feet direct vertical rise will this be equivalent to, the difference being due to friction of water in the pipes?

$$125 \text{ cubic feet per hour} = \frac{125}{60 \times 60} \text{ cubic feet per second};$$

or, by equation (II.),

$$v = \frac{183.34 \times 125}{3600 \times 2 \times 2} = 1.59,$$

for $v = 1.59$, $f =$ about 0.028. Therefore, by equation (I.),

$$h = \frac{0.1865 \times 500 \times 1.59 \times 1.59 \times 0.028}{2} = 3.3;$$

or, the power required would be the same as to raise the 125 cubic feet of water $25 + 3.3 = 28.3$ feet direct vertical height.

[A cubic foot of water weighs about 62.4 pounds. A gallon of water measures 231 cubic inches, or 0.13368 cubic feet, and weighs 8.34 pounds. One cubic foot contains 7.48 gallons of water.]

Substitution in equations (II.) and (I.) gives values in close accord with the following table, prepared by Mr. George A. Ellis, C.E. Mr. Ellis's table is, however, expressed in pounds pressure per square inch. By multiplying the figures in the columns headed "Sizes of Pipes" by 2, the approximate head of water, in feet, corresponding to friction, will be found for each 100 feet of length.

To obtain the approximate head, in feet, corresponding to loss by friction, for any other length of pipe, multiply the figures in Mr. Eilis's table by twice that length, and divide by 100.

TABLE XI.

FRICTION OF WATER IN PIPES.

Friction Loss, in Pounds Pressure per Square Inch, for each 100 Feet of Length in Different Size Clean Iron Pipes Discharging given Quantities of Water per Minute (G. A. ELLIS,* C.E.)

Gals. per Minute.	SIZES OF PIPES: INSIDE DIAMETER.														
	¾ In.	1 In.	1¼ In.	1½ In.	2 In.	2½ In.	3 In.	4 In.	6 In.	8 In.	10 In.	12 In.	14 In.	16 In.	18 In.
5	3.3	0.84	0.31	0.12	–	–	–	–	–	–	–	–	–	–	–
10	13.0	3.16	1.05	0.47	0.12	–	–	–	–	–	–	–	–	–	–
15	28.7	6.98	2.38	0.97	–	–	–	–	–	–	–	–	–	–	–
20	50.4	12.30	4.07	1.66	0.42	–	–	–	–	–	–	–	–	–	–
25	78.0	19.00	6.40	2.62	–	0.21	0.10	–	–	–	–	–	–	–	–
30	–	27.50	9.15	3.75	0.91	–	–	–	–	–	–	–	–	–	–
35	–	37.00	12.40	5.05	–	–	–	–	–	–	–	–	–	–	–
40	–	48.00	16.10	6.52	1.60	–	–	–	–	–	–	–	–	–	–
45	–	–	20.20	8.15	–	–	–	–	–	–	–	–	–	–	–
50	–	–	24.90	10.00	2.44	0.81	0.35	0.09	–	–	–	–	–	–	–
75	–	–	56.10	22.40	5.32	1.80	0.74	–	–	–	–	–	–	–	–
100	–	–	–	39.00	9.46	3 20	1.31	0.33	0.05	–	–	–	–	–	–
125	–	–	–	–	14.90	4.89	1.99	–	–	–	–	–	–	–	–
150	–	–	–	–	21.20	7.00	2.85	0.69	0.10	–	–	–	–	–	–
175	–	–	–	–	28.10	9.46	3.85	–	–	–	–	–	–	–	–
200	–	–	–	–	37.50	12.47	5.02	1.22	0.17	–	–	–	–	–	–
250	–	–	–	–	–	19.66	7.76	1.89	0.26	0.07	0.03	0.01	–	–	–
300	–	–	–	–	–	28.06	11.20	2.66	0.37	0.09	0.04	–	–	–	–
350	–	–	–	–	–	–	15.20	3.65	0.50	0.12	0 05	0.02	–	–	–
400	–	–	–	–	–	–	19.50	4.73	0.65	0.16	0.06	–	–	–	–
450	–	–	–	–	–	–	25.00	6.01	0.81	0.20	0.07	0.03	–	–	–
500	–	–	–	–	–	–	30.80	7.43	0.96	0.25	0.09	0.04	0 017	0.009	0.005
750	–	–	–	–	–	–	–	–	2.21	0.53	0.18	0.08	–	–	–
1000	–	–	–	–	–	–	–	–	3.88	0.94	0.32	0.13	0.062	0.036	0.020
1250	–	–	–	–	–	–	–	–	–	1.46	0.49	0.20	–	–	–
1500	–	–	–	–	–	–	–	–	–	2.09	0.70	0.29	0.135	0.071	0.040
1750	–	–	–	–	–	–	–	–	–	–	0.95	0.38	–	–	–
2000	–	–	–	–	–	–	–	–	–	–	1.23	0.49	0.234	0.123	0.071
2250	–	–	–	–	–	–	–	–	–	–	–	0.63	–	–	–
2500	–	–	–	–	–	–	–	–	–	–	–	0.77	0.362	0.188	0.107
3000	–	–	–	–	–	–	–	–	–	–	–	1.11	0.515	0.267	0.150
3500	–	–	–	–	–	–	–	–	–	–	–	–	0.697	0.365	0.204
4000	–	–	–	–	–	–	–	–	–	–	–	–	0.910	0.472	0.263
4500	–	–	–	–	–	–	–	–	–	–	–	–	–	0.593	0.333
5000	–	–	–	–	–	–	–	–	–	–	–	–	–	0.730	0.408

---

* **Fire Streams and Hydraulics, p. 38.**

Thus, let it be required to raise 5,000 gallons of water per minute through 600 feet of 16-inch pipe. We note in Table XI. the figure 0.730; by multiplying this by twice 600, or by 1,200, and dividing by 100, we obtain $\frac{0.730 \times 1200}{100} = 8.76$, which represents the vertical rise of water that the loss by friction is equal to. Therefore, if the 5,000 gallons of water were to be raised 50 feet per minute, being forced through 600 feet length of 16-inch pipe, the power required would be the same as to raise 5,000 gallons of water per minute a direct vertical height of 58.76 feet. By making the substitution as here noted in Table XI., the results will accord quite closely with those obtained by direct calculation from equations (I.) and (II.).

TABLE XII.

SHOWING CO-EFFICIENT OF FRICTION IN AXLES.

(From Molesworth's "Pocket-Book of Engineering Formulæ.")

AXLE.	BEARING.	Dry.	Greasy and Wetted.	Ordinary Lubrication.	Lubricated Continuously.	Lard and Plumbago.	Fatty Matter.
Bell-metal . .	Bell-metal .	-	-	0.097	-	-	-
Cast-iron . .	" .	-	-	-	0.049	-	-
Wrought-iron,	Cast-iron . .	0.25	0.19	0.070	0.050	0.09	-
" .	" .	-	-	0.070	0.050	-	-
Cast-iron . .	Bell-metal .	-	0.13	0.070	0.050	-	0.14
" . .	Lignum-vitæ,	0.19	0.16	0.070	0.050	0.06	0.16
Wrought-iron,	" "	0.19	-	0.120	-	-	-
Cast-iron . .	Cast-iron . .	0.18	-	0.100	0.090	-	0.14
Lignum-vitæ .	" . .	-	-	0.110	-	-	0.15
" "	Lignum-vitæ,	-	-	-	0.070	-	-

TABLE XIII.

SHOWING THE NUMBER OF GALLONS DISCHARGED PER MINUTE BY A SINGLE-ACTING PUMP OF A GIVEN DIAMETER AND STROKE AT TEN STROKES PER MINUTE.

Diameter of Pump Barrel in Inches.	Length of Stroke in Inches.																	
Inches.	1	2	3	4	5	6	7	8	9	10	12	14	15	16	18	20	24	In.
1	0.034	0.068	0.102	0.136	0.170	0.204	0.238	0.272	0.306	0.340	0.408	0.476	0.510	0.544	0.612	0.680	0.816	1
1¼	0.053	0.106	0.159	0.212	0.266	0.319	0.372	0.425	0.478	0.531	0.637	0.744	0.797	0.850	0.956	1.062	1.275	1¼
1½	0.076	0.153	0.229	0.306	0.382	0.459	0.535	0.612	0.688	0.765	0.918	1.071	1.147	1.224	1.377	1.530	1.836	1½
1¾	0.104	0.208	0.312	0.416	0.521	0.625	0.729	0.833	0.937	1.041	1.249	1.457	1.562	1.666	1.874	2.082	2.499	1¾
2	0.136	0.272	0.408	0.544	0.680	0.816	0.952	1.088	1.224	1.360	1.632	1.904	2.040	2.176	2.448	2.720	3.264	2
2½	0.212	0.425	0.637	0.850	1.062	1.275	1.487	1.700	1.912	2.125	2.550	2.975	3.187	3.400	3.825	4.250	5.100	2½
3	0.306	0.612	0.918	1.224	1.530	1.836	2.142	2.448	2.754	3.060	3.672	4.284	4.590	4.896	5.508	6.120	7.344	3
3½	0.416	0.833	1.249	1.666	2.082	2.499	2.915	3 332	3.748	4.165	4.998	5.831	6.247	6.664	7.497	8.330	9.996	3½
4	0.544	1.088	1.632	2.176	2.720	3.264	3.808	4.352	4.896	5.440	6.528	7.616	8.160	8.704	9.792	10.880	13.056	4
4½	0.688	1.377	2.065	2.754	3.442	4.131	4.819	5.508	6.196	6.885	8.262	9.639	10.327	11.016	12.393	13.770	16.524	4½
5	0.850	1.700	2.550	3.400	4.250	5.100	5.950	6.800	7.650	8.500	10.200	11.900	12.750	13.600	15.300	17.000	20.400	5
5½	1.028	2.057	3.085	4.114	5.142	6.171	7.199	8.228	9.256	10.285	12.342	14.399	15.427	16.456	18.513	20.570	24.684	5½
6	1.224	2.448	3.672	4.896	6.120	7.344	8.568	9.792	11.016	12.240	14.688	17.136	18.360	19.584	22.032	24.480	29.376	6
7	1.666	3.332	4.998	6.664	8.330	9.996	11.662	13.328	14.994	16.660	19.992	23.324	24.990	26.656	29.988	33.320	39.984	7
8	2.176	4.352	6.528	8.704	10.880	13.056	15.232	17.408	19.584	21.760	26.112	30.464	32.640	34.816	39.168	43.520	52.224	8
9	2.754	5.508	8.262	11.016	13.770	16.524	19.278	22.032	24.786	27.540	33.048	38.556	41.310	44.064	50.572	55.080	66.096	9
10	3.400	6.800	10.200	13.600	17.000	20.400	23.800	27.200	30.600	34.000	40.800	47.600	51.000	54.400	61.200	68.000	81.600	10
12	4.896	9.792	14.688	19.584	24.480	29.376	34.272	39.168	44.064	48.960	58.752	68.544	73.440	78.336	88.128	97.920	107.504	12
15	7.650	15.300	22.950	30.600	38.250	45.900	53.550	61.200	68.850	76.500	91.800	107.100	114.750	122.400	137.700	153.000	183.600	15
18	11.016	22.032	33.048	44.064	55.080	66.096	77.112	88.128	99.144	110.160	132.192	154.224	165.240	176.256	198.288	220.320	264.384	18
20	13.600	27.200	40.800	54.400	68.000	81.600	95.200	108.800	122.400	136.000	163.200	190.400	204.000	217.600	244.800	272.000	326.400	20
24	19.584	39.168	58.752	78.336	97.920	117.504	137.088	156.672	176.256	195.840	235.008	274.176	293.760	313.344	352.512	391.680	470.016	24

The quantities given in the table are in gallons, and are calculated for single-acting pumps at 10 strokes per minute. The quantity for any other number of strokes per minute may be found by multiplying the quantity noted in the table by the ratio of 10 to the given number of strokes. For double-acting pumps, the quantity noted in table should be doubled.

TABLE XIV.

SHOWING THE CLASS AND PROPER DIAMETER, IN INCHES, OF PUMPS SUITABLE FOR DIFFERENT ELEVATIONS, AS BASED UPON ACTUAL RESULTS OF PRACTICE.

Designation of Mill.	Elevation, in Feet, to which Water is to be Raised, from 10 Feet to 200 Feet.																																						
	10	15	20	25	30	35	40	45	50	55	60	65	70	75	80	85	90	95	100	105	110	115	120	125	130	135	140	145	150	155	160	165	170	175	180	185	190	195	200
8½-foot wheel.	S 4½	S 4	S 3½	S 3¼	S 3	S 2¾	S 2½	S 2¼	S 2																														
10-foot wheel.	D 4¾	D 3¾	S 4¾	S 4¼	S 3¾	S 3½	S 3¼	S 3¼	S 3	S 2¾	S 2¾	S 2¾	S 2½	S 2½	S 2¼	S 2¼	S 2¼	S 2¼	S 2																				
12-foot wheel.	D 6¼	D 5	D 4½	D 4	S 5	S 4¾	S 4½	S 4¼	S 4	S 3¾	S 3½	S 3½	S 3¼	S 3¼	S 3	S 3	S 3	S 2¾	S 2¾	S 2¾	S 2¾	S 2½	S 2½	S 2½	S 2½	S 2½	S 2¼	S 2¼	S 2¼										
14-foot wheel.	D 6¾	D 5½	D 4¾	D 4¼	D 3¾	S 5	S 4¾	S 4½	S 4¼	S 4	S 3¾	S 3¾	S 3½	S 3½	S 3¼	S 3¼	S 3¼	S 3	S 3	S 3	S 2¾	S 2¾	S 2¾	S 2¾	S 2½	S 2½	S 2½	S 2½	S 2½	S 2½	S 2¼	S 2¼	S 2¼	S 2¼	S 2¼	S 2¼	S 2¼	S 2	S 2
16-foot wheel.	D 7¾	D 6½	D 5½	D 5	D 4½	D 4¼	D 4	D 3¾	D 3½	D 3¼	D 3¼	D 3	D 3	D 2¾	D 2¾	D 2¾	D 2½	D 2½	D 2½	S 3½	S 3¼	S 3¼	S 3¼	S 3¼	S 3	S 3	S 3	S 3	S 2¾	S 2¾	S 2¾	S 2¾	S 2¾	S 2¾	S 2½	S 2½	S 2½	S 2½	S 2½
18-foot wheel.	D 10½	D 8½	D 7¼	D 6½	D 6	D 5½	D 5¼	D 5	D 4¾	D 4½	D 4¼	D 4	D 4	D 3¾	D 3¾	D 3½	D 3½	D 3¼	D 3¼	D 3¼	D 3¼	D 3	D 3	D 3	D 3	D 2¾	D 2¾	D 2¾	D 2¾	D 2¾	D 2½	D 2½	D 2⅛	D 2⅛	D 2½	D 2½	D 2½	S 3¼	S 3¼
20-foot wheel.	D 11¼	D 9¼	D 8	D 7	D 6½	D 6	D 5½	D 5¼	D 5	D 4¾	D 4½	D 4½	D 4¼	D 4	D 4	D 3¾	D 3¾	D 3¾	D 3½	D 3½	D 3¼	D 3¼	D 3¼	D 3¼	D 3	D 3	D 3	D 3	D 2¾	D 2¾	D 2¾	D 2¾	D 2¾	D 2¾	D 2¾	D 2½	D 2½	D 2½	D 2½
25-foot wheel.	D 12¼	D 10	D 8¾	D 7¾	D 7	D 6½	D 6	D 5¾	D 5½	D 5¼	D 5	D 4¾	D 4¾	D 4½	D 4¼	D 4¼	D 4	D 4	D 3¾	D 3¾	D 3¾	D 3½	D 3½	D 3½	D 3½	D 3¼	D 3¼	D 3¼	D 3¼	D 3	D 3	D 3	D 3	D 3	D 3	D 2¾	D 2¾	D 2¾	D 2¾
30-foot wheel.	D 19	D 15½	D 13½	D 12	D 11	D 10¼	D 9½	D 9	D 8½	D 8	D 7¾	D 7½	D 7¼	D 7	D 6¾	D 6½	D 6¼	D 6¼	D 6	D 5¾	D 5¾	D 5½	D 5½	D 5¼	D 5¼	D 5¼	D 5	D 5	D 5	D 4¾	D 4¾	D 4½	D 4½	D 4½	D 4½	D 4½	D 4¼	D 4¼	D 4¼

Pump S referred to above, is a single-acting suction and force pump.

Pump D referred to above, is a double-acting suction and force pump.

TABLE XV.

GIVING THE NUMBER OF SQUARE FEET AND ACRES THAT A FIRST-CLASS WINDMILL CAN IRRIGATE ONE INCH IN EIGHT HOURS, RAISING THE WATER 10 FEET, 15 FEET, AND 25 FEET RESPECTIVELY, AS BASED UPON ACTUAL RESULTS OF PRACTICE.

SIZE OF WINDMILL.	10 Feet.		15 Feet.		25 Feet.	
	Square Feet.	Acres.	Square Feet.	Acres.	Square Feet.	Acres.
8½-foot diameter of wheel,	11736.34	0.269	7824.74	0.180	4744.74	0.109
10 " " "	37161.74	0.853	24774.75	0.569	14767.83	0.339
12 " " "	66765.16	1.533	44509.85	1.022	26134.57	0.600
14 " " "	85982.05	1.974	57321.11	1.316	34757.03	0.798
16 " " "	120106.14	2.757	80070.76	1.838	49742.00	1.142
18 " " "	192446.10	4.418	123164.58	2.827	75215.14	1.727
20 " " "	238395.08	5.473	158930.31	3.649	96211.50	2.209
25 " " "	410038.09	9.413	273359.24	6.275	163533.37	3.754
30 " " "	831686.24	19.093	561197.56	12.883	331752.96	7.616

For two inches irrigation in eight hours, divide the figures in above table by 2, for three inches by 3, etc. Eight hours represents the average running-time of the mills for irrigation purposes in a day of twenty-four hours.

TABLE XVI.

SHOWING CAPACITY OF CISTERNS AND TANKS, IN GALLONS, FOR EACH TWELVE INCHES IN DEPTH.

Diameter in Feet.	Gallons.	Diameter in Feet.	Gallons.	Diameter in Feet.	Gallons.
1.0	5.87	6.5	248.23	11.0	710.90
2.0	23.50	7.0	287.88	11.5	777.05
2.5	36.72	7.5	330.48	12.0	846.03
3.0	52.88	8.0	376.00	13.0	992.91
3.5	71.97	8.5	424.48	14.0	1151.54
4.0	94.00	9.0	475.89	15.0	1321.92
4.5	118.87	9.5	530.24	20.0	2350.08
5.0	146.88	10.0	587.52	25.0	3672.00
5.5	177.72	10.5	647.74	30.0	5287.68
6.0	211.51				

For any other depth, multiply the figures in the table by depth, in inches, divided by 12.

TABLE XVII.

SHOWING DIMENSIONS, WEIGHT, ETC., OF WROUGHT-IRON WELDED PIPE OF DIFFERENT DIAMETERS.

Inside Diameter.	Outside Diameter.	External Circumference.	Length of Pipe per Sq. Foot of Outside Surface.	Internal Area.	External Area.	Length of Pipe containing One Cubic Foot.	Weight per Foot of Length.	No. of Threads per Inch of Screw.	Contents in Gallons per Foot.	Weight of Water per Foot of Length.
in.	inches.	inches.	feet.	sq. in.	sq. in.	feet.	lbs.			lbs.
⅛	0.40	1.272	9.440	0.012	0.129	2500.00	0.24	27	0.0006	0.005
¼	0.54	1.696	7.075	0.049	0.229	1385.00	0.42	18	0.0026	0.021
⅜	0.67	2.121	5.657	0.110	0.358	751.50	0.56	14	0.0057	0.047
½	0.84	2.652	4.502	0.196	0.554	472.40	0.84	14	0.0102	0.085
¾	1.05	3.299	3.637	0.441	0.866	270.00	1.12	11½	0.0230	0.190
1	1.31	4.134	2.903	0.785	1.357	166.90	1.67	11½	0.0408	0.349
1¼	1.66	5.215	2.301	1.227	3.164	96.25	2.25	11½	0.0638	0.527
1½	1.90	5.969	2.010	1.767	2.835	70.65	2.69	11½	0.0918	0.760
2	2.37	7.461	1.611	3.141	4.430	42.36	3.66	8	0.1632	1.356
2½	2.87	9.032	1.328	4.908	6.491	30.11	5.77	8	0 2550	2.116
3	3.50	10.996	1.091	7.068	9.621	19.49	7.54	8	0.3673	3.049
3½	4.00	12.566	0.955	9.621	12.566	14.56	9.05	8	0.4998	4.155
4	4.50	14.137	0.849	12.566	15.904	11.31	10.72	8	0.6528	5.405
4½	5.00	15.708	0.765	15.904	19.635	9.03	12.49	8	0.8263	6.851
5	5.56	17.475	0.629	19.635	24.299	7.20	14.56	8	1.0200	8.500
6	6.62	20.813	0.577	28.274	34.471	4.98	18.76	8	1.4690	12.312
7	7.62	23.954	0.505	38.484	45.663	3.72	23.41	8	1.9990	16.662
8	8.62	27.096	0.444	50.265	58.426	2.88	28.34	8	2.6110	21.750
9	9.68	30.433	0.394	63.617	73.715	2.26	34.67	8	3.3000	27.500
10	10.75	33.772	0.355	78.540	90.792	1.80	40.64	8	4.0810	34.000

1 inch and below are butt-welded, and proved to 300 pounds per square inch hydraulic pressure.

1¼ inches and above are lap-welded, and proved to 500 pounds per square inch hydraulic pressure.

To find the area of a circle in square inches, multiply the diameter, in inches, by itself, and by 0.7854. To find the circumference of a circle in inches, multiply the diameter in inches by 3.1416.

INDEX.

SHORT-TITLE CATALOGUE

OF THE

PUBLICATIONS

OF

JOHN WILEY & SONS,

NEW YORK.

LONDON: CHAPMAN & HALL, LIMITED.

ARRANGED UNDER SUBJECTS

Descriptive circulars sent on application. Books marked with an asterisk (*) are sold at *net* prices only, a double asterisk (**) books sold under the rules of the American Publishers' Association at *net* prices subject to an extra charge for postage. All books are bound in cloth unless otherwise stated.

AGRICULTURE.

Armsby's Manual of Cattle-feeding	12mo,	$1 75
Principles of Animal Nutrition	8vo,	4 00
Budd and Hansen's American Horticultural Manual:		
Part I. Propagation, Culture, and Improvement	12mo,	1 50
Part II. Systematic Pomology	12mo,	1 50
Downing's Fruits and Fruit-trees of America	8vo,	5 00
Elliott's Engineering for Land Drainage	12mo,	1 50
Practical Farm Drainage	12mo,	1 00
Green's Principles of American Forestry	12mo,	1 50
Grotenfelt's Principles of Modern Dairy Practice. (Woll.)	12mo,	2 00
Kemp's Landscape Gardening	12mo,	2 50
Maynard's Landscape Gardening as Applied to Home Decoration	12mo,	1 50
Sanderson's Insects Injurious to Staple Crops	12mo,	1 50
Insects Injurious to Garden Crops. (In preparation.)		
Insects Injuring Fruits. (In preparation.)		
Stockbridge's Rocks and Soils	8vo,	2 50
Woll's Handbook for Farmers and Dairymen	16mo,	1 50

ARCHITECTURE.

Baldwin's Steam Heating for Buildings	12mo,	2 50
Berg's Buildings and Structures of American Railroads	4to,	5 00
Birkmire's Planning and Construction of American Theatres	8vo,	3 00
Architectural Iron and Steel	8vo,	3 50
Compound Riveted Girders as Applied in Buildings	8vo,	2 00
Planning and Construction of High Office Buildings	8vo,	3 50
Skeleton Construction in Buildings	8vo,	3 00
Brigg's Modern American School Buildings	8vo,	4 00
Carpenter's Heating and Ventilating of Buildings	8vo,	4 00
Freitag's Architectural Engineering	8vo,	3 50
Fireproofing of Steel Buildings	8vo,	2 50
French and Ives's Stereotomy	8vo,	2 50
Gerhard's Guide to Sanitary House-inspection	16mo,	1 00
Theatre Fires and Panics	12mo,	1 50
Holly's Carpenters' and Joiners' Handbook	18mo,	75
Johnson's Statics by Algebraic and Graphic Methods	8vo,	2 00

Kidder's Architects' and Builders' Pocket-book. Rewritten Edition.	16mo, mor.,	5 00
Merrill's Stones for Building and Decoration	8vo,	5 00
Non-metallic Minerals: Their Occurrence and Uses	8vo,	4 00
Monckton's Stair-building	4to,	4 00
Patton's Practical Treatise on Foundations	8vo,	5 00
Peabody's Naval Architecture	8vo,	7 50
Richey's Handbook for Superintendents of Construction	16mo, mor.,	4 00
Sabin's Industrial and Artistic Technology of Paints and Varnish	8vo,	3 00
Siebert and Biggin's Modern Stone-cutting and Masonry	8vo,	1 50
Snow's Principal Species of Wood	8vo,	3 50
Sondericker's Graphic Statics with Applications to Trusses, Beams, and Arches.	8vo,	2 00
Towne's Locks and Builders' Hardware	18mo, morocco,	3 00
Wait's Engineering and Architectural Jurisprudence	8vo,	6 00
	Sheep,	6 50
Law of Operations Preliminary to Construction in Engineering and Architecture	8vo,	5 00
	Sheep,	5 50
Law of Contracts	8vo,	3 00
Wood's Rustless Coatings: Corrosion and Electrolysis of Iron and Steel	8vo,	4 00
Woodbury's Fire Protection of Mills	8vo,	2 50
Worcester and Atkinson's Small Hospitals, Establishment and Maintenance, Suggestions for Hospital Architecture, with Plans for a Small Hospital.	12mo,	1 25
The World's Columbian Exposition of 1893	Large 4to,	1 00

ARMY AND NAVY.

Bernadou's Smokeless Powder, Nitro-cellulose, and the Theory of the Cellulose Molecule	12mo,	2 50
* Bruff's Text-book Ordnance and Gunnery	8vo,	6 00
Chase's Screw Propellers and Marine Propulsion	8vo,	3 00
Cloke's Gunner's Examiner. (In press.)		
Craig's Azimuth	4to,	3 50
Crehore and Squier's Polarizing Photo-chronograph	8vo,	3 00
Cronkhite's Gunnery for Non-commissioned Officers	24mo, morocco,	2 00
* Davis's Elements of Law	8vo,	2 50
* Treatise on the Military Law of United States	8vo,	7 00
	Sheep,	7 50
De Brack's Cavalry Outposts Duties. (Carr.)	24mo, morocco,	2 00
Dietz's Soldier's First Aid Handbook	16mo, morocco,	1 25
* Dredge's Modern French Artillery	4to, half morocco,	15 00
Durand's Resistance and Propulsion of Ships	8vo,	5 00
* Dyer's Handbook of Light Artillery	12mo,	3 00
Eissler's Modern High Explosives	8vo,	4 00
* Fiebeger's Text-book on Field Fortification	Small 8vo,	2 00
Hamilton's The Gunner's Catechism	18mo,	1 00
* Hoff's Elementary Naval Tactics	8vo,	1 50
Ingalls's Handbook of Problems in Direct Fire	8vo,	4 00
* Ballistic Tables	8vo,	1 50
* Lyons's Treatise on Electromagnetic Phenomena. Vols. I. and II.	8vo, each,	6 00
* Mahan's Permanent Fortifications. (Mercur.)	8vo, half morocco,	7 50
Manual for Courts-martial	16mo, morocco,	1 50
* Mercur's Attack of Fortified Places	12mo,	2 00
* Elements of the Art of War	8vo,	4 00
Metcalf's Cost of Manufactures—And the Administration of Workshops	8vo,	5 00
* Ordnance and Gunnery. 2 vols.	12mo,	5 00
Murray's Infantry Drill Regulations	18mo, paper,	10
Nixon's Adjutants' Manual	24mo,	1 00
Peabody's Naval Architecture	8vo,	7 50

* Phelps's Practical Marine Surveying	8vo,	2 50
Powell's Army Officer's Examiner	12mo,	4 00
Sharpe's Art of Subsisting Armies in War	18mo, morocco,	1 50
* Walke's Lectures on Explosives	8vo,	4 00
* Wheeler's Siege Operations and Military Mining	8vo,	2 00
Winthrop's Abridgment of Military Law	12mo,	2 50
Woodhull's Notes on Military Hygiene	16mo,	1 50
Young's Simple Elements of Navigation	16mo, morocco,	1 00
Second Edition, Enlarged and Revised	16mo, morocco,	2 00

ASSAYING.

Fletcher's Practical Instructions in Quantitative Assaying with the Blowpipe.	12mo, morocco,	1 50
Furman's Manual of Practical Assaying	8vo,	3 00
Lodge's Notes on Assaying and Metallurgical Laboratory Experiments	8vo,	3 00
Miller's Manual of Assaying	12mo,	1 00
O'Driscoll's Notes on the Treatment of Gold Ores	8vo,	2 00
Ricketts and Miller's Notes on Assaying	8vo,	3 00
Ulke's Modern Electrolytic Copper Refining	8vo,	3 00
Wilson's Cyanide Processes	12mo,	1 50
Chlorination Process	12mo,	1 50

ASTRONOMY.

Comstock's Field Astronomy for Engineers	8vo,	2 50
Craig's Azimuth	4to,	3 50
Doolittle's Treatise on Practical Astronomy	8vo,	4 00
Gore's Elements of Geodesy	8vo,	2 50
Hayford's Text-book of Geodetic Astronomy	8vo,	3 00
Merriman's Elements of Precise Surveying and Geodesy	8vo,	2 50
* Michie and Harlow's Practical Astronomy	8vo,	3 00
* White's Elements of Theoretical and Descriptive Astronomy	12mo,	2 00

BOTANY.

Davenport's Statistical Methods, with Special Reference to Biological Variation.	16mo, morocco,	1 25
Thomé and Bennett's Structural and Physiological Botany	16mo,	2 25
Westermaier's Compendium of General Botany. (Schneider.)	8vo,	2 00

CHEMISTRY.

Adriance's Laboratory Calculations and Specific Gravity Tables	12mo,	1 25
Allen's Tables for Iron Analysis	8vo,	3 00
Arnold's Compendium of Chemistry. (Mandel.)	Small 8vo,	3 50
Austen's Notes for Chemical Students	12mo,	1 50
Bernadou's Smokeless Powder.—Nitro-cellulose, and Theory of the Cellulose Molecule	12mo,	2 50
Bolton's Quantitative Analysis	8vo,	1 50
* Browning's Introduction to the Rarer Elements	8vo,	1 50
Brush and Penfield's Manual of Determinative Mineralogy	8vo,	4 00
Classen's Quantitative Chemical Analysis by Electrolysis. (Boltwood.)	8vo,	3 00
Cohn's Indicators and Test-papers	12mo,	2 00
Tests and Reagents	8vo,	3 00
Crafts's Short Course in Qualitative Chemical Analysis. (Schaeffer.)	12mo,	1 50
Dolezalek's Theory of the Lead Accumulator (Storage Battery). (Von Ende.)	12mo,	2 50
Drechsel's Chemical Reactions. (Merrill.)	12mo,	1 25
Duhem's Thermodynamics and Chemistry. (Burgess.)	8vo,	4 00
Eissler's Modern High Explosives	8vo,	4 00
Effront's Enzymes and their Applications. (Prescott.)	8vo,	3 00
Erdmann's Introduction to Chemical Preparations. (Dunlap.)	12mo,	1 25

Fletcher's Practical Instructions in Quantitative Assaying with the Blowpipe. 12mo, morocco,	1 50
Fowler's Sewage Works Analyses.....12mo,	2 00
Fresenius's Manual of Qualitative Chemical Analysis. (Wells.).....8vo,	5 00
Manual of Qualitative Chemical Analysis. Part I. Descriptive. (Wells.) 8vo,	3 00
System of Instruction in Quantitative Chemical Analysis. (Cohn.) 2 vols.....8vo,	12 50
Fuertes's Water and Public Health.....12mo,	1 50
Furman's Manual of Practical Assaying.....8vo,	3 00
* Getman's Exercises in Physical Chemistry.....12mo,	2 00
Gill's Gas and Fuel Analysis for Engineers.....12mo,	1 25
Grotenfelt's Principles of Modern Dairy Practice. (Woll.).....12mo,	2 00
Hammarsten's Text-book of Physiological Chemistry. (Mandel.).....8vo,	4 00
Helm's Principles of Mathematical Chemistry. (Morgan.).....12mo,	1 50
Hering's Ready Reference Tables (Conversion Factors).....16mo, morocco,	2 50
Hind's Inorganic Chemistry.....8vo,	3 00
* Laboratory Manual for Students.....12mo,	75
Holleman's Text-book of Inorganic Chemistry. (Cooper.).....8vo,	2 50
Text-book of Organic Chemistry. (Walker and Mott.).....8vo,	2 50
* Laboratory Manual of Organic Chemistry. (Walker.).....12mo,	1 00
Hopkins's Oil-chemists' Handbook.....8vo,	3 00
Jackson's Directions for Laboratory Work in Physiological Chemistry..8vo,	1 25
Keep's Cast Iron.....8vo,	2 50
Ladd's Manual of Quantitative Chemical Analysis.....12mo,	1 00
Landauer's Spectrum Analysis. (Tingle.).....8vo,	3 00
* Langworthy and Austen. The Occurrence of Aluminium in Vegetable Products, Animal Products, and Natural Waters.....8vo,	2 00
Lassar-Cohn's Practical Urinary Analysis. (Lorenz.).....12mo,	1 00
Application of Some General Reactions to Investigations in Organic Chemistry. (Tingle.).....12mo,	1 00
Leach's The Inspection and Analysis of Food with Special Reference to State Control.....8vo,	7 50
Löb's Electrolysis and Electrosynthesis of Organic Compounds. (Lorenz.).12mo,	1 00
Lodge's Notes on Assaying and Metallurgical Laboratory Experiments.....8vo,	3 00
Lunge's Techno-chemical Analysis. (Cohn.).....12mo,	1 00
Mandel's Handbook for Bio-chemical Laboratory.....12mo,	1 50
* Martin's Laboratory Guide to Qualitative Analysis with the Blowpipe..12mo,	60
Mason's Water-supply. (Considered Principally from a Sanitary Standpoint.) 3d Edition, Rewritten.....8vo,	4 00
Examination of Water. (Chemical and Bacteriological.).....12mo,	1 25
Matthew's The Textile Fibres.....8vo,	3 50
Meyer's Determination of Radicles in Carbon Compounds. (Tingle.)..12mo,	1 00
Miller's Manual of Assaying.....12mo,	1 00
Mixter's Elementary Text-book of Chemistry.....12mo,	1 50
Morgan's Outline of Theory of Solution and its Results.....12mo,	1 00
Elements of Physical Chemistry.....12mo,	2 00
Morse's Calculations used in Cane-sugar Factories.....16mo, morocco,	1 50
Mulliken's General Method for the Identification of Pure Organic Compounds. Vol. I.....Large 8vo,	5 00
O'Brine's Laboratory Guide in Chemical Analysis.....8vo,	2 00
O'Driscoll's Notes on the Treatment of Gold Ores.....8vo,	2 00
Ostwald's Conversations on Chemistry. Part One. (Ramsey.).....12mo,	1 50
Ostwald's Conversations on Chemistry. Part Two. (Turnbull.). (In Press.)	
* Penfield's Notes on Determinative Mineralogy and Record of Mineral Tests. 8vo, paper,	50
Pictet's The Alkaloids and their Chemical Constitution. (Biddle.).....8vo,	5 00
Pinner's Introduction to Organic Chemistry. (Austen.).....12mo,	1 50
Poole's Calorific Power of Fuels.....8vo,	3 00
Prescott and Winslow's Elements of Water Bacteriology, with Special Reference to Sanitary Water Analysis.....12mo.	1 25

* Reisig's Guide to Piece-dyeing	8vo,	25 00
Richards and Woodman's Air, Water, and Food from a Sanitary Standpoint	8vo,	2 00
Richards's Cost of Living as Modified by Sanitary Science	12mo,	1 00
Cost of Food, a Study in Dietaries	12mo,	1 00
* Richards and Williams's The Dietary Computer	8vo,	1 50
Ricketts and Russell's Skeleton Notes upon Inorganic Chemistry. (Part I. Non-metallic Elements.)	8vo, morocco,	75
Ricketts and Miller's Notes on Assaying	8vo,	3 00
Rideal's Sewage and the Bacterial Purification of Sewage	8vo,	3 50
Disinfection and the Preservation of Food	8vo,	4 00
Rigg's Elementary Manual for the Chemical Laboratory	8vo,	1 25
Rostoski's Serum Diagnosis. (Bolduan.)	12mo,	1 00
Ruddiman's Incompatibilities in Prescriptions	8vo,	2 00
Sabin's Industrial and Artistic Technology of Paints and Varnish	8vo,	3 00
Salkowski's Physiological and Pathological Chemistry. (Orndorff.)	8vo,	2 50
Schimpf's Text-book of Volumetric Analysis	12mo,	2 50
Essentials of Volumetric Analysis	12mo,	1 25
Spencer's Handbook for Chemists of Beet-sugar Houses	16mo, morocco,	3 00
Handbook for Sugar Manufacturers and their Chemists	16mo, morocco,	2 00
Stockbridge's Rocks and Soils	8vo,	2 50
* Tillman's Elementary Lessons in Heat	8vo,	1 50
* Descriptive General Chemistry	8vo,	3 00
Treadwell's Qualitative Analysis. (Hall.)	8vo,	3 00
Quantitative Analysis. (Hall.)	8vo,	4 00
Turneaure and Russell's Public Water-supplies	8vo,	5 00
Van Deventer's Physical Chemistry for Beginners. (Boltwood.)	12mo,	1 50
* Walke's Lectures on Explosives	8vo,	4 00
Washington's Manual of the Chemical Analysis of Rocks	8vo,	2 00
Wassermann's Immune Sera: Hæmolysins, Cytotoxins, and Precipitins. (Bolduan.)	12mo,	1 00
Well's Laboratory Guide in Qualitative Chemical Analysis	8vo,	1 50
Short Course in Inorganic Qualitative Chemical Analysis for Engineering Students	12mo,	1 50
Text-book of Chemical Arithmetic. (In press.)		
Whipple's Microscopy of Drinking-water	8vo,	3 50
Wilson's Cyanide Processes	12mo,	1 50
Chlorination Process	12mo,	1 50
Wulling's Elementary Course in Inorganic, Pharmaceutical, and Medical Chemistry	12mo,	2 00

CIVIL ENGINEERING.

BRIDGES AND ROOFS. HYDRAULICS. MATERIALS OF ENGINEERING. RAILWAY ENGINEERING.

Baker's Engineers' Surveying Instruments	12mo,	3 00
Bixby's Graphical Computing Table	Paper 19½ × 24¼ inches.	25
** Burr's Ancient and Modern Engineering and the Isthmian Canal. (Postage, 27 cents additional.)	8vo,	3 50
Comstock's Field Astronomy for Engineers	8vo,	2 50
Davis's Elevation and Stadia Tables	8vo,	1 00
Elliott's Engineering for Land Drainage	12mo,	1 50
Practical Farm Drainage	12mo,	1 00
Fiebeger's Treatise on Civil Engineering. (In press.)		
Folwell's Sewerage. (Designing and Maintenance.)	8vo,	3 00
Freitag's Architectural Engineering. 2d Edition, Rewritten	8vo,	3 50
French and Ives's Stereotomy	8vo,	2 50
Goodhue's Municipal Improvements	12mo,	1 75
Goodrich's Economic Disposal of Towns' Refuse	8vo,	3 50
Gore's Elements of Geodesy	8vo,	2 50
Hayford's Text-book of Geodetic Astronomy	8vo,	3 00
Hering's Ready Reference Tables (Conversion Factors)	16mo, morocco,	2 50

Howe's Retaining Walls for Earth. 12mo, 1 25
Johnson's (J. B.) Theory and Practice of Surveying. . . . . .Small 8vo, 4 00
Johnson's (L. J.) Statics by Algebraic and Graphic Methods. 8vo, 2 00
Laplace's Philosophical Essay on Probabilities. (Truscott and Emory.). 12mo, 2 00
Mahan's Treatise on Civil Engineering. (1873.) (Wood.). 8vo, 5 00
* Descriptive Geometry. 8vo, 1 50
Merriman's Elements of Precise Surveying and Geodesy. 8vo, 2 50
Elements of Sanitary Engineering. 8vo, 2 00
Merriman and Brooks's Handbook for Surveyors. . . . . .16mo, morocco, 2 00
Nugent's Plane Surveying. 8vo, 3 50
Ogden's Sewer Design. 12mo, 2 00
Patton's Treatise on Civil Engineering. . . . . .8vo half leather, 7 50
Reed's Topographical Drawing and Sketching 4to, 5 00
Rideal's Sewage and the Bacterial Purification of Sewage. 8vo, 3 50
Siebert and Biggin's Modern Stone-cutting and Masonry. 8vo, 1 50
Smith's Manual of Topographical Drawing. (McMillan.). 8vo, 2 50
Sondericker's Graphic Statics, with Applications to Trusses, Beams, and Arches. 8vo, 2 00
Taylor and Thompson's Treatise on Concrete, Plain and Reinforced. 8vo, 5 00
* Trautwine's Civil Engineer's Pocket-book. . . . . .16mo, morocco, 5 00
Wait's Engineering and Architectural Jurisprudence. 8vo, 6 00
Sheep, 6 50
Law of Operations Preliminary to Construction in Engineering and Architecture. 8vo, 5 00
Sheep, 5 50
Law of Contracts. 8vo, 3 00
Warren's Stereotomy—Problems in Stone-cutting. 8vo, 2 50
Webb's Problems in the Use and Adjustment of Engineering Instruments. 16mo, morocco, 1 25
* Wheeler's Elementary Course of Civil Engineering. 8vo, 4 00
Wilson's Topographic Surveying. 8vo, 3 50

BRIDGES AND ROOFS.

Boller's Practical Treatise on the Construction of Iron Highway Bridges. .8vo, 2 00
* Thames River Bridge. . . . . .4to, paper, 5 00
Burr's Course on the Stresses in Bridges and Roof Trusses, Arched Ribs, and Suspension Bridges. 8vo, 3 50
Burr and Falk's Influence Lines for Bridge and Roof Computations. . . .8vo, 3 00
Du Bois's Mechanics of Engineering. Vol. II. .Small 4to, 10 00
Foster's Treatise on Wooden Trestle Bridges. 4to, 5 00
Fowler's Ordinary Foundations. 8vo, 3 50
Greene's Roof Trusses. 8vo, 1 25
Bridge Trusses. 8vo, 2 50
Arches in Wood, Iron, and Stone. 8vo, 2 50
Howe's Treatise on Arches. 8vo, 4 00
Design of Simple Roof-trusses in Wood and Steel. 8vo, 2 00
Johnson, Bryan, and Turneaure's Theory and Practice in the Designing of Modern Framed Structures. . . . . .Small 4to, 10 00
Merriman and Jacoby's Text-book on Roofs and Bridges:
Part I. Stresses in Simple Trusses. 8vo, 2 50
Part II. Graphic Statics. 8vo, 2 50
Part III. Bridge Design. 8vo, 2 50
Part IV. Higher Structures. 8vo, 2 50
Morison's Memphis Bridge. 4to, 10 00
Waddell's De Pontibus, a Pocket-book for Bridge Engineers. . 16mo, morocco, 3 00
Specifications for Steel Bridges. 12mo, 1 25
Wood's Treatise on the Theory of the Construction of Bridges and Roofs. .8vo, 2 00
Wright's Designing of Draw-spans:
Part I. Plate-girder Draws. 8vo, 2 50
Part II. Riveted-truss and Pin-connected Long-span Draws. 8vo, 2 50
Two parts in one volume. 8vo, 3 50

HYDRAULICS.

Bazin's Experiments upon the Contraction of the Liquid Vein Issuing from an Orifice. (Trautwine.)	8vo,	2 00
Bovey's Treatise on Hydraulics	8vo,	5 00
Church's Mechanics of Engineering	8vo,	6 00
Diagrams of Mean Velocity of Water in Open Channels	paper,	1 50
Coffin's Graphical Solution of Hydraulic Problems	16mo, morocco,	2 50
Flather's Dynamometers, and the Measurement of Power	12mo,	3 00
Folwell's Water-supply Engineering	8vo,	4 00
Frizell's Water-power	8vo,	5 00
Fuertes's Water and Public Health	12mo,	1 50
Water-filtration Works	12mo,	2 50
Ganguillet and Kutter's General Formula for the Uniform Flow of Water in Rivers and Other Channels. (Hering and Trautwine.)	8vo	4 00
Hazen's Filtration of Public Water-supply	8vo,	3 00
Hazlehurst's Towers and Tanks for Water-works	8vo,	2 50
Herschel's 115 Experiments on the Carrying Capacity of Large, Riveted, Metal Conduits	8vo,	2 00
Mason's Water-supply. (Considered Principally from a Sanitary Standpoint.)	8vo,	4 00
Merriman's Treatise on Hydraulics	8vo,	5 00
* Michie's Elements of Analytical Mechanics	8vo,	4 00
Schuyler's Reservoirs for Irrigation, Water-power, and Domestic Water-supply	Large 8vo,	5 00
** Thomas and Watt's Improvement of Rivers. (Post., 44c. additional.)	4to,	6 00
Turneaure and Russell's Public Water-supplies	8vo,	5 00
Wegmann's Design and Construction of Dams	4to,	5 00
Water-supply of the City of New York from 1658 to 1895	4to,	10 00
Wilson's Irrigation Engineering	Small 8vo,	4 00
Wolff's Windmill as a Prime Mover	8vo,	3 00
Wood's Turbines	8vo,	2 50
Elements of Analytical Mechanics	8vo,	3 00

MATERIALS OF ENGINEERING.

Baker's Treatise on Masonry Construction	8vo,	5 00
Roads and Pavements	8vo,	5 00
Black's United States Public Works	Oblong 4to,	5 00
Bovey's Strength of Materials and Theory of Structures	8vo,	7 50
Burr's Elasticity and Resistance of the Materials of Engineering	8vo,	7 50
Byrne's Highway Construction	8vo,	5 00
Inspection of the Materials and Workmanship Employed in Construction.	16mo,	3 00
Church's Mechanics of Engineering	8vo,	6 00
Du Bois's Mechanics of Engineering. Vol. I.	Small 4to,	7 50
Johnson's Materials of Construction	Large 8vo,	6 00
Fowler's Ordinary Foundations	8vo,	3 50
Keep's Cast Iron	8vo,	2 50
Lanza's Applied Mechanics	8vo,	7 50
Marten's Handbook on Testing Materials. (Henning.) 2 vols.	8vo,	7 50
Merrill's Stones for Building and Decoration	8vo,	5 00
Merriman's Text-book on the Mechanics of Materials	8vo,	4 00
Strength of Materials	12mo,	1 00
Metcalf's Steel. A Manual for Steel-users	12mo,	2 00
Patton's Practical Treatise on Foundations	8vo,	5 00
Richardson's Modern Asphalt Pavements	8vo,	3 00
Richey's Handbook for Superintendents of Construction	16mo, mor.,	4 00
Rockwell's Roads and Pavements in France	12mo,	1 25

Sabin's Industrial and Artistic Technology of Paints and Varnish	8vo,	3 00
Smith's Materials of Machines	12mo,	1 00
Snow's Principal Species of Wood	8vo,	3 50
Spalding's Hydraulic Cement	12mo,	2 00
Text-book on Roads and Pavements	12mo,	2 00
Taylor and Thompson's Treatise on Concrete, Plain and Reinforced	8vo,	5 00
Thurston's Materials of Engineering. 3 Parts	8vo,	8 00
Part I. Non-metallic Materials of Engineering and Metallurgy	8vo,	2 00
Part II. Iron and Steel	8vo,	3 50
Part III. A Treatise on Brasses, Bronzes, and Other Alloys and their Constituents	8vo,	2 50
Thurston's Text-book of the Materials of Construction	8vo,	5 00
Tillson's Street Pavements and Paving Materials	8vo,	4 00
Waddell's De Pontibus. (A Pocket-book for Bridge Engineers.)	16mo, mor.,	3 00
Specifications for Steel Bridges	12mo,	1 25
Wood's (De V.) Treatise on the Resistance of Materials, and an Appendix on the Preservation of Timber	8vo,	2 00
Wood's (De V.) Elements of Analytical Mechanics	8vo,	3 00
Wood's (M. P.) Rustless Coatings: Corrosion and Electrolysis of Iron and Steel	8vo,	4 00

RAILWAY ENGINEERING.

Andrew's Handbook for Street Railway Engineers	3x5 inches, morocco,	1 25
Berg's Buildings and Structures of American Railroads	4to,	5 00
Brook's Handbook of Street Railroad Location	16mo, morocco,	1 50
Butt's Civil Engineer's Field-book	16mo, morocco,	2 50
Crandall's Transition Curve	16mo, morocco,	1 50
Railway and Other Earthwork Tables	8vo,	1 50
Dawson's "Engineering" and Electric Traction Pocket-book	16mo, morocco,	5 00
Dredge's History of the Pennsylvania Railroad: (1879)	Paper,	5 00
* Drinker's Tunnelling, Explosive Compounds, and Rock Drills	4to, half mor.,	25 00
Fisher's Table of Cubic Yards	Cardboard,	25
Godwin's Railroad Engineers' Field-book and Explorers' Guide	16mo, mor.,	2 50
Howard's Transition Curve Field-book	16mo, morocco,	1 50
Hudson's Tables for Calculating the Cubic Contents of Excavations and Embankments	8vo,	1 00
Molitor and Beard's Manual for Resident Engineers	16mo,	1 00
Nagle's Field Manual for Railroad Engineers	16mo, morocco,	3 00
Philbrick's Field Manual for Engineers	16mo, morocco,	3 00
Searles's Field Engineering	16mo, morocco,	3 00
Railroad Spiral	16mo, morocco,	1 50
Taylor's Prismoidal Formulæ and Earthwork	8vo,	1 50
* Trautwine's Method of Calculating the Cube Contents of Excavations and Embankments by the Aid of Diagrams	8vo,	2 00
The Field Practice of Laying Out Circular Curves for Railroads.	12mo, morocco,	2 50
Cross-section Sheet	Paper,	25
Webb's Railroad Construction	16mo, morocco,	5 00
Wellington's Economic Theory of the Location of Railways	Small 8vo,	5 00

DRAWING.

Barr's Kinematics of Machinery	8vo,	2 50
* Bartlett's Mechanical Drawing	8vo,	3 00
* " " " Abridged Ed.	8vo,	1 50
Coolidge's Manual of Drawing	8vo, paper	1 00
Coolidge and Freeman's Elements of General Drafting for Mechanical Engineers	Oblong 4to,	2 50
Durley's Kinematics of Machines	8vo,	4 00
Emch's Introduction to Projective Geometry and its Applications	8vo.	2 50

Hill's Text-book on Shades and Shadows, and Perspective	8vo,	2 00
Jamison's Elements of Mechanical Drawing	8vo,	2 50
Jones's Machine Design:		
Part I. Kinematics of Machinery	8vo,	1 50
Part II. Form, Strength, and Proportions of Parts	8vo,	3 00
MacCord's Elements of Descriptive Geometry	8vo,	3 00
Kinematics; or, Practical Mechanism	8vo,	5 00
Mechanical Drawing	4to,	4 00
Velocity Diagrams	8vo,	1 50
* Mahan's Descriptive Geometry and Stone-cutting	8vo,	1 50
Industrial Drawing. (Thompson.)	8vo,	3 50
Moyer's Descriptive Geometry	8vo,	2 00
Reed's Topographical Drawing and Sketching	4to,	5 00
Reid's Course in Mechanical Drawing	8vo,	2 00
Text-book of Mechanical Drawing and Elementary Machine Design	8vo,	3 00
Robinson's Principles of Mechanism	8vo,	3 00
Schwamb and Merrill's Elements of Mechanism	8vo,	3 00
Smith's Manual of Topographical Drawing. (McMillan.)	8vo,	2 50
Warren's Elements of Plane and Solid Free-hand Geometrical Drawing	12mo,	1 00
Drafting Instruments and Operations	12mo,	1 25
Manual of Elementary Projection Drawing	12mo,	1 50
Manual of Elementary Problems in the Linear Perspective of Form and Shadow	12mo,	1 00
Plane Problems in Elementary Geometry	12mo,	1 25
Primary Geometry	12mo,	75
Elements of Descriptive Geometry, Shadows, and Perspective	8vo,	3 50
General Problems of Shades and Shadows	8vo,	3 00
Elements of Machine Construction and Drawing	8vo,	7 50
Problems, Theorems, and Examples in Descriptive Geometry	8vo,	2 50
Weisbach's Kinematics and Power of Transmission. (Hermann and Klein)	8vo,	5 00
Whelpley's Practical Instruction in the Art of Letter Engraving	12mo,	2 00
Wilson's (H. M.) Topographic Surveying	8vo,	3 50
Wilson's (V. T.) Free-hand Perspective	8vo,	2 50
Wilson's (V. T.) Free-hand Lettering	8vo,	1 00
Woolf's Elementary Course in Descriptive Geometry	Large 8vo,	3 00

ELECTRICITY AND PHYSICS.

Anthony and Brackett's Text-book of Physics. (Magie.)	Small 8vo,	3 00
Anthony's Lecture-notes on the Theory of Electrical Measurements	12mo,	1 00
Benjamin's History of Electricity	8vo,	3 00
Voltaic Cell	8vo,	3 00
Classen's Quantitative Chemical Analysis by Electrolysis. (Boltwood.)	8vo,	3 00
Crehore and Squier's Polarizing Photo-chronograph	8vo,	3 00
Dawson's "Engineering" and Electric Traction Pocket-book	16mo, morocco,	5 00
Dolezalek's Theory of the Lead Accumulator (Storage Battery). (Von Ende.)	12mo,	2 50
Duhem's Thermodynamics and Chemistry. (Burgess.)	8vo,	4 00
Flather's Dynamometers, and the Measurement of Power	12mo,	3 00
Gilbert's De Magnete. (Mottelay.)	8vo,	2 50
Hanchett's Alternating Currents Explained	12mo,	1 00
Hering's Ready Reference Tables (Conversion Factors)	16mo, morocco,	2 50
Holman's Precision of Measurements	8vo,	2 00
Telescopic Mirror-scale Method, Adjustments, and Tests	Large 8vo,	75
Kinzbrunner's Testing of Continuous-Current Machines	8vo,	2 00
Landauer's Spectrum Analysis. (Tingle.)	8vo,	3 00
Le Chatelien's High-temperature Measurements. (Boudouard—Burgess.)	12mo,	3 00
Löb's Electrolysis and Electrosynthesis of Organic Compounds. (Lorenz.)	12mo,	1 00

* Lyons's Treatise on Electromagnetic Phenomena. Vols. I. and II.	8vo, each,	6 00
* Michie's Elements of Wave Motion Relating to Sound and Light	8vo,	4 00
Niaudet's Elementary Treatise on Electric Batteries. (Fishback.)	12mo,	2 50
* Rosenberg's Electrical Engineering. (Haldane Gee—Kinzbrunner.)	8vo,	1 50
Ryan, Norris, and Hoxie's Electrical Machinery. Vol. I	8vo,	2 50
Thurston's Stationary Steam-engines	8vo,	2 50
* Tillman's Elementary Lessons in Heat	8vo,	1 50
Tory and Pitcher's Manual of Laboratory Physics	Small 8vo,	2 00
Ulke's Modern Electrolytic Copper Refining	8vo,	3 00

LAW.

* Davis's Elements of Law	8vo,	2 50
* Treatise on the Military Law of United States	8vo,	7 00
*	Sheep,	7 50
Manual for Courts-martial	16mo, morocco,	1 50
Wait's Engineering and Architectural Jurisprudence	8vo,	6 00
	Sheep,	6 50
Law of Operations Preliminary to Construction in Engineering and Architecture	8vo,	5 00
	Sheep,	5 50
Law of Contracts	8vo,	3 00
Winthrop's Abridgment of Military Law	12mo,	2 50

MANUFACTURES.

Bernadou's Smokeless Powder—Nitro-cellulose and Theory of the Cellulose Molecule	12mo,	2 50
Bolland's Iron Founder	12mo,	2 50
"The Iron Founder," Supplement	12mo,	2 50
Encyclopedia of Founding and Dictionary of Foundry Terms Used in the Practice of Moulding	12mo,	3 00
Eissler's Modern High Explosives	8vo,	4 00
Effront's Enzymes and their Applications. (Prescott.)	8vo,	3 00
Fitzgerald's Boston Machinist	12mo,	1 00
Ford's Boiler Making for Boiler Makers	18mo,	1 00
Hopkin's Oil-chemists' Handbook	8vo,	3 00
Keep's Cast Iron	8vo,	2 50
Leach's The Inspection and Analysis of Food with Special Reference to State Control	Large 8vo,	7 50
Matthews's The Textile Fibres	8vo,	3 50
Metcalf's Steel. A Manual for Steel-users	12mo,	2 00
Metcalfe's Cost of Manufactures—And the Administration of Workshops	8vo,	5 00
Meyer's Modern Locomotive Construction	4to,	10 00
Morse's Calculations used in Cane-sugar Factories	16mo, morocco,	1 50
* Reisig's Guide to Piece-dyeing	8vo,	25 00
Sabin's Industrial and Artistic Technology of Paints and Varnish	8vo,	3 00
Smith's Press-working of Metals	8vo,	3 00
Spalding's Hydraulic Cement	12mo,	2 00
Spencer's Handbook for Chemists of Beet-sugar Houses	16mo, morocco,	3 00
Handbook for Sugar Manufacturers and their Chemists	16mo, morocco,	2 00
Taylor and Thompson's Treatise on Concrete, Plain and Reinforced	8vo,	5 00
Thurston's Manual of Steam-boilers, their Designs, Construction and Operation	8vo,	5 00
* Walke's Lectures on Explosives	8vo,	4 00
Ware's Manufacture of Sugar. (In press.)		
West's American Foundry Practice	12mo,	2 50
Moulder's Text-book	12mo,	2 50

Wolff's Windmill as a Prime Mover	8vo,	3 00
Wood's Rustless Coatings: Corrosion and Electrolysis of Iron and Steel.	8vo,	4 00

MATHEMATICS.

Baker's Elliptic Functions	8vo,	1 50
* Bass's Elements of Differential Calculus	12mo,	4 00
Briggs's Elements of Plane Analytic Geometry	12mo,	1 00
Compton's Manual of Logarithmic Computations	12mo,	1 50
Davis's Introduction to the Logic of Algebra	8vo,	1 50
* Dickson's College Algebra	Large 12mo,	1 50
* Introduction to the Theory of Algebraic Equations	Large 12mo,	1 25
Emch's Introduction to Projective Geometry and its Applications	8vo,	2 50
Halsted's Elements of Geometry	8vo,	1 75
Elementary Synthetic Geometry	8vo,	1 50
Rational Geometry	12mo,	1 75
* Johnson's (J. B.) Three-place Logarithmic Tables: Vest-pocket size	paper,	15
	100 copies for	5 00
* Mounted on heavy cardboard, 8 × 10 inches,		25
	10 copies for	2 00
Johnson's (W. W.) Elementary Treatise on Differential Calculus	Small 8vo,	3 00
Johnson's (W. W.) Elementary Treatise on the Integral Calculus	Small 8vo,	1 50
Johnson's (W. W.) Curve Tracing in Cartesian Co-ordinates	12mo,	1 00
Johnson's (W. W.) Treatise on Ordinary and Partial Differential Equations.	Small 8vo,	3 50
Johnson's (W. W.) Theory of Errors and the Method of Least Squares	12mo,	1 50
* Johnson's (W. W.) Theoretical Mechanics	12mo,	3 00
Laplace's Philosophical Essay on Probabilities. (Truscott and Emory.)	12mo,	2 00
* Ludlow and Bass. Elements of Trigonometry and Logarithmic and Other Tables	8vo,	3 00
Trigonometry and Tables published separately	Each,	2 00
* Ludlow's Logarithmic and Trigonometric Tables	8vo,	1 00
Maurer's Technical Mechanics	8vo,	4 00
Merriman and Woodward's Higher Mathematics	8vo,	5 00
Merriman's Method of Least Squares	8vo,	2 00
Rice and Johnson's Elementary Treatise on the Differential Calculus.	Sm. 8vo,	3 00
Differential and Integral Calculus. 2 vols. in one	Small 8vo,	2 50
Wood's Elements of Co-ordinate Geometry	8vo,	2 00
Trigonometry: Analytical, Plane, and Spherical	12mo,	1 00

MECHANICAL ENGINEERING.

MATERIALS OF ENGINEERING, STEAM-ENGINES AND BOILERS.

Bacon's Forge Practice	12mo,	1 50
Baldwin's Steam Heating for Buildings	12mo,	2 50
Barr's Kinematics of Machinery	8vo,	2 50
* Bartlett's Mechanical Drawing	8vo,	3 00
* " " " Abridged Ed.	8vo,	1 50
Benjamin's Wrinkles and Recipes	12mo,	2 00
Carpenter's Experimental Engineering	8vo,	6 00
Heating and Ventilating Buildings	8vo,	4 00
Cary's Smoke Suppression in Plants using Bituminous Coal. (In Preparation.)		
Clerk's Gas and Oil Engine	Small 8vo,	4 00
Coolidge's Manual of Drawing	8vo, paper,	1 00
Coolidge and Freeman's Elements of General Drafting for Mechanical Engineers	Oblong 4to,	2 50

Cromwell's Treatise on Toothed Gearing	12mo,	1 50
Treatise on Belts and Pulleys	12mo,	1 50
Durley's Kinematics of Machines	8vo,	4 00
Flather's Dynamometers and the Measurement of Power	12mo,	3 00
Rope Driving	12mo,	2 00
Gill's Gas and Fuel Analysis for Engineers	12mo,	1 25
Hall's Car Lubrication	12mo,	1 00
Hering's Ready Reference Tables (Conversion Factors)	16mo, morocco,	2 50
Hutton's The Gas Engine	8vo,	5 00
Jamison's Mechanical Drawing	8vo,	2 50
Jones's Machine Design:		
Part I. Kinematics of Machinery	8vo,	1 50
Part II. Form, Strength, and Proportions of Parts	8vo,	3 00
Kent's Mechanical Engineers' Pocket-book	16mo, morocco,	5 00
Kerr's Power and Power Transmission	8vo,	2 00
Leonard's Machine Shop, Tools, and Methods. (In press.)		
Lorenz's Modern Refrigerating Machinery. (Pope, Haven, and Dean.) (In press.)		
MacCord's Kinematics; or, Practical Mechanism	8vo,	5 00
Mechanical Drawing	4to,	4 00
Velocity Diagrams	8vo,	1 50
Mahan's Industrial Drawing. (Thompson.)	8vo,	3 50
Poole's Calorific Power of Fuels	8vo,	3 00
Reid's Course in Mechanical Drawing	8vo,	2 00
Text-book of Mechanical Drawing and Elementary Machine Design	8vo,	3 00
Richard's Compressed Air	12mo,	1 50
Robinson's Principles of Mechanism	8vo,	3 00
Schwamb and Merrill's Elements of Mechanism	8vo,	3 00
Smith's Press-working of Metals	8vo,	3 00
Thurston's Treatise on Friction and Lost Work in Machinery and Mill Work	8vo,	3 00
Animal as a Machine and Prime Motor, and the Laws of Energetics	12mo,	1 00
Warren's Elements of Machine Construction and Drawing	8vo,	7 50
Weisbach's Kinematics and the Power of Transmission. (Herrmann—Klein.)	8vo,	5 00
Machinery of Transmission and Governors. (Herrmann—Klein.)	8vo,	5 00
Wolff's Windmill as a Prime Mover	8vo,	3 00
Wood's Turbines	8vo,	2 50

MATERIALS OF ENGINEERING.

Bovey's Strength of Materials and Theory of Structures	8vo,	7 50
Burr's Elasticity and Resistance of the Materials of Engineering. 6th Edition. Reset	8vo,	7 50
Church's Mechanics of Engineering	8vo,	6 00
Johnson's Materials of Construction	8vo,	6 00
Keep's Cast Iron	8vo,	2 50
Lanza's Applied Mechanics	8vo,	7 50
Martens's Handbook on Testing Materials. (Henning.)	8vo,	7 50
Merriman's Text-book on the Mechanics of Materials	8vo,	4 00
Strength of Materials	12mo,	1 00
Metcalf's Steel. A manual for Steel-users	12mo.	2 00
Sabin's Industrial and Artistic Technology of Paints and Varnish	8vo,	3 00
Smith's Materials of Machines	12mo,	1 00
Thurston's Materials of Engineering	3 vols., 8vo,	8 00
Part II. Iron and Steel	8vo,	3 50
Part III. A Treatise on Brasses, Bronzes, and Other Alloys and their Constituents	8vo,	2 50
Text-book of the Materials of Construction	8vo,	5 00

Wood's (De V.) Treatise on the Resistance of Materials and an Appendix on the Preservation of Timber	8vo,	2 00
Wood's (De V.) Elements of Analytical Mechanics	8vo,	3 00
Wood's (M. P.) Rustless Coatings: Corrosion and Electrolysis of Iron and Steel	8vo,	4 00

STEAM-ENGINES AND BOILERS.

Berry's Temperature-entropy Diagram	12mo,	1 25
Carnot's Reflections on the Motive Power of Heat. (Thurston.)	12mo,	1 50
Dawson's "Engineering" and Electric Traction Pocket-book	16mo, mor.,	5 00
Ford's Boiler Making for Boiler Makers	18mo,	1 00
Goss's Locomotive Sparks	8vo,	2 00
Hemenway's Indicator Practice and Steam-engine Economy	12mo,	2 00
Hutton's Mechanical Engineering of Power Plants	8vo,	5 00
Heat and Heat-engines	8vo,	5 00
Kent's Steam boiler Economy	8vo,	4 00
Kneass's Practice and Theory of the Injector	8vo,	1 50
MacCord's Slide-valves	8vo,	2 00
Meyer's Modern Locomotive Construction	4to,	10 00
Peabody's Manual of the Steam-engine Indicator	12mo,	1 50
Tables of the Properties of Saturated Steam and Other Vapors	8vo,	1 00
Thermodynamics of the Steam-engine and Other Heat-engines	8vo,	5 00
Valve-gears for Steam-engines	8vo,	2 50
Peabody and Miller's Steam-boilers	8vo,	4 00
Pray's Twenty Years with the Indicator	Large 8vo,	2 50
Pupin's Thermodynamics of Reversible Cycles in Gases and Saturated Vapors. (Osterberg.)	12mo,	1 25
Reagan's Locomotives: Simple Compound, and Electric	12mo,	2 50
Rontgen's Principles of Thermodynamics. (Du Bois.)	8vo,	5 00
Sinclair's Locomotive Engine Running and Management	12mo,	2 00
Smart's Handbook of Engineering Laboratory Practice	12mo,	2 50
Snow's Steam-boiler Practice	8vo,	3 00
Spangler's Valve-gears	8vo,	2 50
Notes on Thermodynamics	12mo,	1 00
Spangler, Greene, and Marshall's Elements of Steam-engineering	8vo,	3 00
Thurston's Handy Tables	8vo,	1 50
Manual of the Steam-engine	2 vols., 8vo,	10 00
Part I. History, Structure, and Theory	8vo,	6 00
Part II. Design, Construction, and Operation	8vo,	6 00
Handbook of Engine and Boiler Trials, and the Use of the Indicator and the Prony Brake	8vo,	5 00
Stationary Steam-engines	8vo,	2 50
Steam-boiler Explosions in Theory and in Practice	12mo,	1 50
Manual of Steam-boilers, their Designs, Construction, and Operation	8vo,	5 00
Weisbach's Heat, Steam, and Steam-engines. (Du Bois.)	8vo,	5 00
Whitham's Steam-engine Design	8vo,	5 00
Wilson's Treatise on Steam-boilers. (Flather.)	16mo,	2 50
Wood's Thermodynamics, Heat Motors, and Refrigerating Machines	8vo,	4 00

MECHANICS AND MACHINERY.

Barr's Kinematics of Machinery	8vo,	2 50
Bovey's Strength of Materials and Theory of Structures	8vo,	7 50
Chase's The Art of Pattern-making	12mo,	2 50
Church's Mechanics of Engineering	8vo,	6 00

Church's Notes and Examples in Mechanics	8vo,	2 00
Compton's First Lessons in Metal-working	12mo,	1 50
Compton and De Groodt's The Speed Lathe	12mo,	1 50
Cromwell's Treatise on Toothed Gearing	12mo,	1 50
Treatise on Belts and Pulleys	12mo,	1 50
Dana's Text-book of Elementary Mechanics for Colleges and Schools	12mo,	1 50
Dingey's Machinery Pattern Making	12mo,	2 00
Dredge's Record of the Transportation Exhibits Building of the World's Columbian Exposition of 1893	4to half morocco,	5 00
Du Bois's Elementary Principles of Mechanics:		
Vol. I. Kinematics	8vo,	3 50
Vol. II. Statics	8vo,	4 00
Vol. III. Kinetics	8vo,	3 50
Mechanics of Engineering. Vol. I	Small 4to,	7 50
Vol. II	Small 4to,	10 00
Durley's Kinematics of Machines	8vo,	4 00
Fitzgerald's Boston Machinist	16mo,	1 00
Flather's Dynamometers, and the Measurement of Power	12mo,	3 00
Rope Driving	12mo,	2 00
Goss's Locomotive Sparks	8vo,	2 00
Hall's Car Lubrication	12mo,	1 00
Holly's Art of Saw Filing	18mo,	75
James's Kinematics of a Point and the Rational Mechanics of a Particle	Sm. 8vo,	2 00
* Johnson's (W. W.) Theoretical Mechanics	12mo,	3 00
Johnson's (L. J.) Statics by Graphic and Algebraic Methods	8vo,	2 00
Jones's Machine Design:		
Part I. Kinematics of Machinery	8vo,	1 50
Part II. Form, Strength, and Proportions of Parts	8vo,	3 00
Kerr's Power and Power Transmission	8vo,	2 00
Lanza's Applied Mechanics	8vo,	7 50
Leonard's Machine Shop, Tools, and Methods. (In press.)		
Lorenz's Modern Refrigerating Machinery. (Pope, Haven, and Dean.)		(In press.)
MacCord's Kinematics; or, Practical Mechanism	8vo,	5 00
Velocity Diagrams	8vo,	1 50
Maurer's Technical Mechanics	8vo,	4 00
Merriman's Text-book on the Mechanics of Materials	8vo,	4 00
* Elements of Mechanics	12mo,	1 00
* Michie's Elements of Analytical Mechanics	8vo,	4 00
Reagan's Locomotives: Simple, Compound, and Electric	12mo,	2 50
Reid's Course in Mechanical Drawing	8vo,	2 00
Text-book of Mechanical Drawing and Elementary Machine Design	8vo,	3 00
Richards's Compressed Air	12mo,	1 50
Robinson's Principles of Mechanism	8vo,	3 00
Ryan, Norris, and Hoxie's Electrical Machinery. Vol. I	8vo,	2 50
Schwamb and Merrill's Elements of Mechanism	8vo,	3 00
Sinclair's Locomotive-engine Running and Management	12mo,	2 00
Smith's (O.) Press-working of Metals	8vo,	3 00
Smith's (A. W.) Materials of Machines	12mo,	1 00
Spangler, Greene, and Marshall's Elements of Steam-engineering	8vo,	3 00
Thurston's Treatise on Friction and Lost Work in Machinery and Mill Work	8vo.	3 00
Animal as a Machine and Prime Motor, and the Laws of Energetics	12mo,	1 00
Warren's Elements of Machine Construction and Drawing	8vo,	7 50
Weisbach's Kinematics and Power of Transmission. (Herrmann—Klein.)	8vo,	5 00
Machinery of Transmission and Governors. (Herrmann—Klein.)	8vo,	5 00
Wood's Elements of Analytical Mechanics	8vo,	3 00
Principles of Elementary Mechanics	12mo,	1 25
Turbines	8vo,	2 50
The World's Columbian Exposition of 1893	4to,	1 00

METALLURGY.

Egleston's Metallurgy of Silver, Gold, and Mercury:		
Vol. I. Silver	8vo,	7 50
Vol. II. Gold and Mercury	8vo,	7 50
** Iles's Lead-smelting. (Postage 9 cents additional.)	12mo,	2 50
Keep's Cast Iron	8vo,	2 50
Kunhardt's Practice of Ore Dressing in Europe	8vo,	1 50
Le Chatelier's High-temperature Measurements. (Boudouard—Burgess.)	12mo,	3 00
Metcalf's Steel. A Manual for Steel-users	12mo,	2 00
Smith's Materials of Machines	12mo,	1 00
Thurston's Materials of Engineering. In Three Parts	8vo,	8 00
Part II. Iron and Steel	8vo,	3 50
Part III. A Treatise on Brasses, Bronzes, and Other Alloys and their Constituents	8vo,	2 50
Ulke's Modern Electrolytic Copper Refining	8vo,	3 00

MINERALOGY.

Barringer's Description of Minerals of Commercial Value.	Oblong, morocco,	2 50
Boyd's Resources of Southwest Virginia	8vo,	3 00
Map of Southwest Virignia	Pocket-book form.	2 00
Brush's Manual of Determinative Mineralogy. (Penfield.)	8vo,	4 00
Chester's Catalogue of Minerals	8vo, paper,	1 00
	Cloth,	1 25
Dictionary of the Names of Minerals	8vo,	3 50
Dana's System of Mineralogy	Large 8vo, half leather,	12 50
First Appendix to Dana's New "System of Mineralogy."	Large 8vo,	1 00
Text-book of Mineralogy	8vo,	4 00
Minerals and How to Study Them	12mo,	1 50
Catalogue of American Localities of Minerals	Large 8vo,	1 00
Manual of Mineralogy and Petrography	12mo	2 00
Douglas's Untechnical Addresses on Technical Subjects	12mo,	1 00
Eakle's Mineral Tables	8vo,	1 25
Egleston's Catalogue of Minerals and Synonyms	8vo,	2 50
Hussak's The Determination of Rock-forming Minerals. (Smith.)	Small 8vo,	2 00
Merrill's Non-metallic Minerals: Their Occurrence and Uses	8vo,	4 00
* Penfield's Notes on Determinative Mineralogy and Record of Mineral Tests.	8vo, paper,	0 50
Rosenbusch's Microscopical Physiography of the Rock-making Minerals. (Iddings.)	8vo,	5 00
* Tillman's Text-book of Important Minerals and Rocks	8vo,	2 00
Williams's Manual of Lithology	8vo,	3 00

MINING.

Beard's Ventilation of Mines	12mo,	2 50
Boyd's Resources of Southwest Virginia	8vo,	3 00
Map of Southwest Virginia	Pocket book form,	2 00
Douglas's Untechnical Addresses on Technical Subjects	12mo,	1 00
* Drinker's Tunneling, Explosive Compounds, and Rock Drills	4to, hf. mor	25 00
Eissler's Modern High Explosives	8vo	4 00
Fowler's Sewage Works Analyses	12mo	2 00
Goodyear's Coal-mines of the Western Coast of the United States	12mo,	2 50
Ihlseng's Manual of Mining	8vo,	5 00
** Iles's Lead-smelting. (Postage 9c. additional.)	12mo,	2 50
Kunhardt's Practice of Ore Dressing in Europe	8vo,	1 50
O'Driscoll's Notes on the Treatment of Gold Ores	8vo,	2 00
* Walke's Lectures on Explosives	8vo,	4 00
Wilson's Cyanide Processes	12mo,	1 50
Chlorination Process	12mo,	1 50

Wilson's Hydraulic and Placer Mining	12mo,	2 00
Treatise on Practical and Theoretical Mine Ventilation	12mo.	1 25

SANITARY SCIENCE.

Folwell's Sewerage. (Designing, Construction, and Maintenance.)	8vo,	3 00
Water-supply Engineering	8vo,	4 00
Fuertes's Water and Public Health	12mo,	1 50
Water-filtration Works	12mo,	2 50
Gerhard's Guide to Sanitary House-inspection	16mo,	1 00
Goodrich's Economic Disposal of Town's Refuse	Demy 8vo,	3 50
Hazen's Filtration of Public Water-supplies	8vo,	3 00
Leach's The Inspection and Analysis of Food with Special Reference to State Control	8vo,	7 50
Mason's Water-supply. (Considered principally from a Sanitary Standpoint)	8vo,	4 00
Examination of Water. (Chemical and Bacteriological.)	12mo,	1 25
Merriman's Elements of Sanitary Engineering	8vo,	2 00
Ogden's Sewer Design	12mo,	2 00
Prescott and Winslow's Elements of Water Bacteriology, with Special Reference to Sanitary Water Analysis	12mo,	1 25
* Price's Handbook on Sanitation	12mo,	1 50
Richards's Cost of Food. A Study in Dietaries	12mo,	1 00
Cost of Living as Modified by Sanitary Science	12mo,	1 00
Richards and Woodman's Air, Water, and Food from a Sanitary Standpoint	8vo,	2 00
* Richards and Williams's The Dietary Computer	8vo,	1 50
Rideal's Sewage and Bacterial Purification of Sewage	8vo,	3 50
Turneaure and Russell's Public Water-supplies	8vo,	5 00
Von Behring's Suppression of Tuberculosis. (Bolduan.)	12mo,	1 00
Whipple's Microscopy of Drinking-water	8vo,	3 50
Woodhull's Notes on Military Hygiene	16mo,	1 50

MISCELLANEOUS.

De Fursac's Manual of Psychiatry. (Rosanoff and Collins.)	Large 12mo,	2 50
Emmons's Geological Guide-book of the Rocky Mountain Excursion of the International Congress of Geologists	Large 8vo,	1 50
Ferrel's Popular Treatise on the Winds	8vo.	4 00
Haines's American Railway Management	12mo,	2 50
Mott's Composition, Digestibility, and Nutritive Value of Food.	Mounted chart,	1 25
Fallacy of the Present Theory of Sound	16mo,	1 00
Ricketts's History of Rensselaer Polytechnic Institute, 1824-1894	Small 8vo,	3 00
Rostoski's Serum Diagnosis. (Bolduan.)	12mo,	1 00
Rotherham's Emphasized New Testament	Large 8vo,	2 00
Steel's Treatise on the Diseases of the Dog	8vo,	3 50
Totten's Important Question in Metrology	8vo,	2 50
The World's Columbian Exposition of 1893	4to,	1 00
Von Behring's Suppression of Tuberculosis. (Bolduan.)	12mo,	1 00
Winslow's Elements of Applied Microscopy	12mo,	1 50
Worcester and Atkinson. Small Hospitals, Establishment and Maintenance; Suggestions for Hospital Architecture: Plans for Small Hospital	12mo,	1 25

HEBREW AND CHALDEE TEXT-BOOKS.

Green's Elementary Hebrew Grammar	12mo,	1 25
Hebrew Chrestomathy	8vo,	2 00
Gesenius's Hebrew and Chaldee Lexicon to the Old Testament Scriptures. (Tregelles.)	Small 4to, half morocco,	5 00
Letteris's Hebrew Bible	8vo,	2 25